# Widebody 2.5 A IGBT and MOSFET Driver

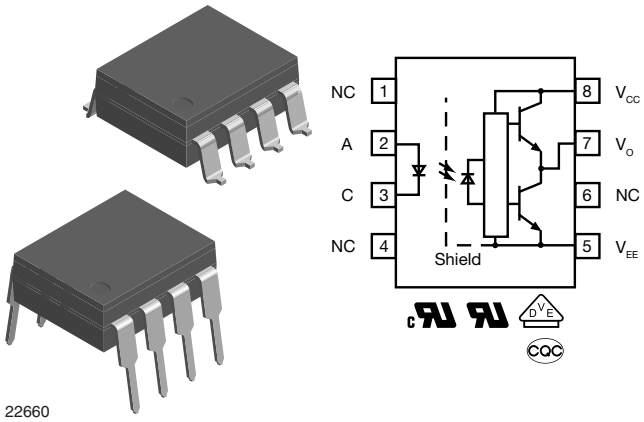


22660

## FEATURES

- 2.5 A minimum peak output current
- 10 mm minimum external creepage distance
- 50 kV/µs (typ.) common mode rejection
- $I_{CC}$ = 2.5 mA maximum supply current
- Under voltage lock-out (UVLO) with hysteresis
- Wide operating $V_{CC}$ range: 15 V to 32 V
- Industrial temperature range: -40 °C to +100 °C
- Material categorization: for definitions of compliance please see www.vishay.com/doc?99912

Pb-free

e3

RoHS COMPLIANT

HALOGEN FREE GREEN (5-2008)

## LINKS TO ADDITIONAL RESOURCES

Product Page | Design Tools | Footprints | Schematics | Videos

## DESCRIPTION

The VOW3120 consists of an infrared light emitting diode optically coupled to an integrated circuit with a power output stage. This optocoupler is ideally suited for driving power IGBTs and MOSFETs used in motor control and inverter applications. The high operating voltage range of the output stage provides the drive voltages required by gate controlled devices. The voltage and current supplied by this optocoupler makes it ideally suited for directly driving IGBTs with ratings up to 1200 V/100 A. For IGBTs with higher ratings, the VOW3120 can be used to drive a discrete power stage which drives the IGBT gate.

The VOW3120 provides higher isolation for applications operating at higher working voltages, and or higher pollution degree criteria. Higher $V_{IORM}$, $V_{IOTM}$, creepage and clearance distances, make the VOW3120 ideal for many industrial control and power conversion applications.

## APPLICATIONS

- Industrial welding equipment
- Motor drives
- Industrial inverters
- Commercial and residential solar inverters
- Wind generator inverters
- EV and plug-in HEV chargers

## AGENCY APPROVALS

All parts are certified under base model VOW3120. This model number should be used when consulting safety agency documents.

- UL
- cUL
- DIN EN 60747-5-5 (VDE 0884-5), available with option 1
- CQC GB4943.1
- CQC GB8898

## ORDERING INFORMATION

| V | O | W | 3 | 1 | 2 | 0 | - | X | 0 | # | # | T |
|---|---|---|---|---|---|---|---|---|---|---|---|---|
| PART NUMBER | | | | | | | | PACKAGE OPTION | | | | TAPE AND REEL |

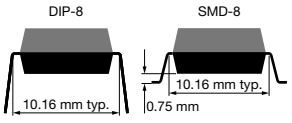


| PACKAGE | UL, cUL, CQC | UL, cUL, CQC, VDE (option 1) |
|---|---|---|
| DIP-8, widebody, 400 mil | VOW3120 | VOW3120-X001 |
| SMD-8, widebody, 400 mil (option 7) | - | VOW3120-X017T |



For technical questions, contact: optocoupleranswers@vishay.com

THIS DOCUMENT IS SUBJECT TO CHANGE WITHOUT NOTICE. THE PRODUCTS DESCRIBED HEREIN AND THIS DOCUMENT ARE SUBJECT TO SPECIFIC DISCLAIMERS, SET FORTH AT www.vishay.com/doc?91000

| ABSOLUTE MAXIMUM RATINGS ($T_{amb}$ = 25 °C, unless otherwise specified) | | | | |
|---|---|---|---|---|
| **PARAMETER** | **TEST CONDITION** | **SYMBOL** | **VALUE** | **UNIT** |
| **INPUT** | | | | |
| Input forward current | | $I_F$ | 25 | mA |
| Peak transient input current | < 1 µs pulse width, 300 pps | $I_{F(TRAN)}$ | 1 | A |
| Reverse input voltage | | $V_R$ | 5 | V |
| Input power dissipation | | $P_{diss}$ | 40 | mW |
| LED junction temperature | | $T_j$ | 125 | °C |
| **OUTPUT** | | | | |
| High peak output current (1) | | $I_{OH(PEAK)}$ | 2.5 | A |
| Low peak output current (1) | | $I_{OL(PEAK)}$ | 2.5 | A |
| Supply voltage | | ($V_{CC}$ - $V_{EE}$) | 0 to +35 | V |
| Output voltage | | $V_{O(PEAK)}$ | 0 to +$V_{CC}$ | V |
| Output power dissipation | | $P_{diss}$ | 220 | mW |
| Output junction temperature | | $T_j$ | 125 | °C |
| **OPTOCOUPLER** | | | | |
| Storage temperature range | | $T_{stg}$ | -55 to +150 | °C |
| Ambient operating temperature range | | $T_{amb}$ | -40 to +100 | °C |
| Total power dissipation | | $P_{tot}$ | 260 | mW |
| Lead solder temperature | For 10 s, 1.6 mm below seating plane | $T_{sld}$ | 260 | °C |

**Notes**

- Stresses in excess of the absolute maximum ratings can cause permanent damage to the device. Functional operation of the device is not implied at these or any other conditions in excess of those given in the operational sections of this document. Exposure to absolute maximum ratings for extended periods of the time can adversely affect reliability.

(1) Maximum pulse width = 10 µs, maximum duty cycle = 0.2 %. This value is intended to allow for component tolerances for designs with $I_O$ peak minimum = 2.5 A. See applications section for additional details on limiting $I_{OH}$ peak.

| RECOMMENDED OPERATING CONDITION | | | | |
|---|---|---|---|---|
| **PARAMETER** | **SYMBOL** | **MIN.** | **MAX.** | **UNIT** |
| Power supply voltage | $V_{CC}$ - $V_{EE}$ | 15 | 32 | V |
| Input LED current (on) | $I_F$ | 10 | - | mA |
| Input voltage (off) | $V_{F(OFF)}$ | -3 | 0.8 | V |
| Operating temperature | $T_{amb}$ | -40 | +100 | °C |

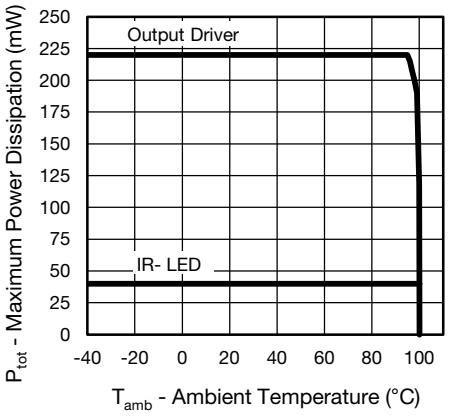


Fig. 1 - Dissipated Operating Power vs. Operating Temperature


For technical questions, contact: optocoupleranswers@vishay.com
THIS DOCUMENT IS SUBJECT TO CHANGE WITHOUT NOTICE. THE PRODUCTS DESCRIBED HEREIN AND THIS DOCUMENT ARE SUBJECT TO SPECIFIC DISCLAIMERS, SET FORTH AT www.vishay.com/doc?91000

## THERMAL CHARACTERISTICS

| PARAMETER | SYMBOL | VALUE | UNIT |
|---|---|---|---|
| LED power dissipation | $P_{LED}$ | 40 | mW |
| Output power dissipation | $P_{OUT}$ | 220 | mW |
| Total power dissipation | $P_{TOT}$ | 260 | mW |
| Maximum LED junction temperature | $T_{j\ max.}$ | 125 | °C |
| Maximum output die junction temperature | $T_{j\ max.}$ | 125 | °C |
| Thermal resistance, LED to output | $\theta_{ED}$ | 315 | °C/W |
| Thermal resistance, LED to board | $\theta_{EB}$ | 300 | °C/W |
| Thermal resistance, output to board | $\theta_{DB}$ | 80 | °C/W |
| Thermal resistance, board to ambient | $\theta_{BA}$ | 50 | °C/W |

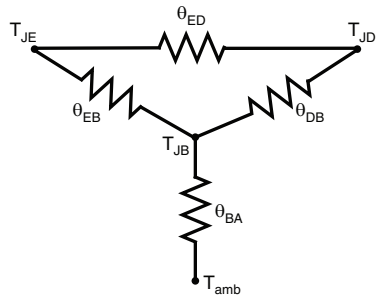


**Note**

- The thermal characteristics table above were measured at 25 °C and the thermal model is represented in the thermal network below. Each resistance value given in this model can be used to calculate the temperatures at each node for a given operating condition. The thermal resistance from board to ambient will be dependent on the type of PCB, layout and thickness of copper traces. For a detailed explanation of the thermal model, please reference Vishay's Thermal Characteristics of Optocouplers application note.

## ELECTRICAL CHARACTERISTICS

| PARAMETER | TEST CONDITION | SYMBOL | MIN. | TYP. | MAX. | UNIT |
|---|---|---|---|---|---|---|
| High level output current | $V_O = (V_{CC} - 4\ V)$ | $I_{OH}$ | 0.5 | - | - | A |
| | $V_O = (V_{CC} - 15\ V)$ | $I_{OH}$ | 2.5 | - | - | A |
| Low level output current | $V_O = (V_{EE} + 2.5\ V)$ | $I_{OL}$ | 0.5 | - | - | A |
| | $V_O = (V_{EE} + 15\ V)$ | $I_{OL}$ | 2.5 | - | - | A |
| High level output voltage | $I_O$ = -100 mA | $V_{OH}$ | $V_{CC}$ - 4 | - | - | V |
| Low level output voltage | $I_O$ = 100 mA | $V_{OL}$ | - | 0.2 | 0.5 | V |
| High level supply current | Output open, $I_F$ = 10 mA to 16 mA | $I_{CCH}$ | - | - | 2.5 | mA |
| Low level supply current | Output open, $V_F$ = -3 V to +0.8 V | $I_{CCL}$ | - | - | 2.5 | mA |
| Threshold input current low to high | $I_O$ = 0 mA, $V_O$ > 5 V | $I_{FLH}$ | - | 3.4 | 8 | mA |
| Threshold input voltage high to low | | $V_{FHL}$ | 0.8 | - | - | V |
| Input forward voltage | $I_F$ = 10 mA | $V_F$ | 1 | 1.36 | 1.6 | V |
| Temperature coefficient of forward voltage | $I_F$ = 10 mA | $\Delta V_F/\Delta T_{amb}$ | - | -1.4 | - | mV/°C |
| Input reverse breakdown voltage | $I_R$ = 10 µA | $V_{(BR)}$ | 5 | - | - | V |
| Input capacitance | f = 1 MHz, $V_F$ = 0 V | $C_{IN}$ | - | 45 | - | pF |
| UVLO threshold | $V_O \geq 5$ V, $I_F$ = 10 mA | $V_{UVLO+}$ | 11 | - | 13.5 | V |
| | | $V_{UVLO-}$ | 9.5 | - | 12 | V |
| UVLO hysteresis | | $UVLO_{HYS}$ | - | 1.6 | - | V |
| Capacitance (input to output) | f = 1 MHz, $V_F$ = 0 V | $C_{IO}$ | - | 0.9 | - | pF |

**Note**

- Minimum and maximum values were tested over recommended operating conditions ($T_{amb}$ = -40 °C to +100 °C, $I_{F(ON)}$ = 10 mA to 16 mA, $V_{F(OFF)}$ = -3 V to 0.8 V, $V_{CC}$ = 15 V to 32 V, $V_{EE}$ = ground) unless otherwise specified. Typical values are characteristics of the device and are the result of engineering evaluations. Typical values are for information only and are not part of the testing requirements. All typical values were measured at $T_{amb}$ = 25 °C and with $V_{CC}$ - $V_{EE}$ = 32 V.


For technical questions, contact: optocoupleranswers@vishay.com
THIS DOCUMENT IS SUBJECT TO CHANGE WITHOUT NOTICE. THE PRODUCTS DESCRIBED HEREIN AND THIS DOCUMENT ARE SUBJECT TO SPECIFIC DISCLAIMERS, SET FORTH AT www.vishay.com/doc?91000

## SWITCHING CHARACTERISTICS

| PARAMETER | TEST CONDITION | SYMBOL | MIN. | TYP. | MAX. | UNIT |
|---|---|---|---|---|---|---|
| Propagation delay time to logic low output | $R_g$ = 10 Ω, $C_g$ = 10 nF, f = 10 kHz, duty cycle = 50 % | $t_{PHL}$ | 0.1 | 0.25 | 0.5 | µs |
| Propagation delay time to logic high output | $R_g$ = 10 Ω, $C_g$ = 10 nF, f = 10 kHz, duty cycle = 50 % | $t_{PLH}$ | 0.1 | 0.25 | 0.5 | µs |
| Pulse width distortion | $R_g$ = 10 Ω, $C_g$ = 10 nF, f = 10 kHz, duty cycle = 50 % | PWD | - | - | 0.3 | µs |
| Rise time | $R_g$ = 10 Ω, $C_g$ = 10 nF, f = 10 kHz, duty cycle = 50 % | $t_r$ | - | 0.1 | - | µs |
| Fall time | $R_g$ = 10 Ω, $C_g$ = 10 nF, f = 10 kHz, duty cycle = 50 % | $t_f$ | - | 0.1 | - | µs |
| UVLO turn on delay | $V_O$ > 5 V, $I_F$ = 10 mA | $T_{UVLO-ON}$ | - | 0.8 | - | µs |
| UVLO turn off delay | $V_O$ < 5 V, $I_F$ = 10 mA | $T_{UVLO-OFF}$ | - | 0.6 | - | µs |

**Note**

- Minimum and maximum values were tested over recommended operating conditions ($T_{amb}$ = -40 °C to +100 °C, $I_{F(ON)}$ = 10 mA to 16 mA, $V_{F(OFF)}$ = -3 V to 0.8 V, $V_{CC}$ = 15 V to 32 V, $V_{EE}$ = ground) unless otherwise specified. Typical values are characteristics of the device and are the result of engineering evaluations. Typical values are for information only and are not part of the testing requirements. All typical values were measured at $T_{amb}$ = 25 °C and with $V_{CC}$ - $V_{EE}$ = 32 V.

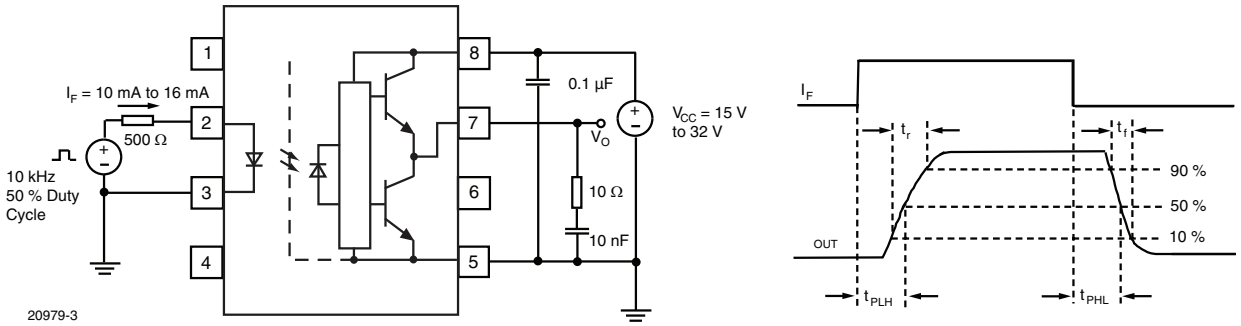


Fig. 2 - $t_{PLH}$, $t_{PHL}$, $t_r$ and $t_f$ Test Circuit and Waveforms

## COMMON MODE TRANSIENT IMMUNITY

| PARAMETER | TEST CONDITION | SYMBOL | MIN. | TYP. | MAX. | UNIT |
|---|---|---|---|---|---|---|
| Common mode transient immunity at logic high output | $T_{amb}$ = 25 °C, $I_F$ = 10 mA to 16 mA, $V_{CM}$ = 1500 V, $V_{CC}$ = 32 V | $\|CM_H\|$ | 25 | 50 | - | kV/µs |
| Common mode transient immunity at logic low output | $T_{amb}$ = 25 °C, $V_{CM}$ = 1500 V, $V_{CC}$ = 32 V, $V_F$ = 0 V | $\|CM_L\|$ | 25 | 45 | - | kV/µs |

**Note**

- Minimum and maximum values were tested over recommended operating conditions ($T_{amb}$ = -40 °C to +100 °C, $I_{F(ON)}$ = 10 mA to 16 mA, $V_{F(OFF)}$ = -3 V to 0.8 V, $V_{CC}$ = 15 V to 32 V, $V_{EE}$ = ground) unless otherwise specified. Typical values are characteristics of the device and are the result of engineering evaluations. Typical values are for information only and are not part of the testing requirements. All typical values were measured at $T_{amb}$ = 25 °C and with $V_{CC}$ - $V_{EE}$ = 32 V.

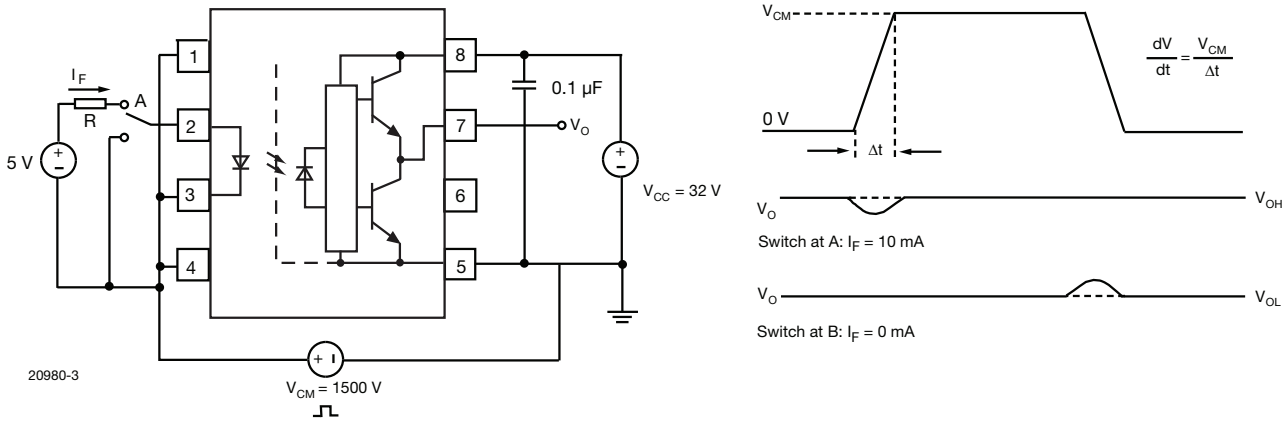


Fig. 3 - CMR Test Circuit and Waveforms


For technical questions, contact: optocoupleranswers@vishay.com
THIS DOCUMENT IS SUBJECT TO CHANGE WITHOUT NOTICE. THE PRODUCTS DESCRIBED HEREIN AND THIS DOCUMENT ARE SUBJECT TO SPECIFIC DISCLAIMERS, SET FORTH AT www.vishay.com/doc?91000

| **SAFETY AND INSULATION RATINGS** ($T_{amb}$ = 25 °C, unless otherwise specified) | | | | |
|---|---|---|---|---|
| **PARAMETER** | **TEST CONDITION** | **SYMBOL** | **VALUE** | **UNIT** |
| Climatic classification | According to IEC 68 part 1 | | 40 / 100 / 21 | |
| Pollution degree | According to DIN VDE 0109 | | 2 | |
| Comparative tracking index | Insulation group IIIa | CTI | 250 | |
| Maximum rated withstanding isolation voltage | According to UL1577, t = 1 min | $V_{ISO}$ | 5300 | $V_{RMS}$ |
| Maximum transient isolation voltage | According to DIN EN 60747-5-5 | $V_{IOTM}$ | 8000 | $V_{peak}$ |
| Maximum repetitive peak isolation voltage | According to DIN EN 60747-5-5 | $V_{IORM}$ | 1414 | $V_{peak}$ |
| Isolation resistance | $T_{amb}$ = 25 °C, $V_{IO}$ = 500 V | $R_{IO}$ | $\geq 10^{12}$ | Ω |
| | $T_{amb}$ = 100 °C, $V_{IO}$ = 500 V | $R_{IO}$ | $\geq 10^{11}$ | Ω |
| Output safety power | | $P_{SO}$ | 800 | mW |
| Input safety current | | $I_{SI}$ | 350 | mA |
| Input safety temperature | | $T_S$ | 175 | °C |
| Creepage distance | DIP-8, widebody, 400 mil | | ≥ 10 | mm |
| Clearance distance | | | ≥ 10 | mm |
| Creepage distance | SMD-8, widebody, 400 mil (option 7) | | ≥ 10 | mm |
| Clearance distance | | | ≥ 10 | mm |
| Insulation thickness | | DTI | ≥ 0.4 | mm |
| Input to output test voltage, method B | $V_{IORM}$ x 1.875 = $V_{PR}$, 100 % production test with $t_M$ = 1 s, partial discharge < 5 pC | $V_{PR}$ | 2651 | $V_{peak}$ |
| Input to output test voltage, method A | $V_{IORM}$ x 1.6 = $V_{PR}$, 100 % sample test with $t_M$ = 10 s, partial discharge < 5 pC | $V_{PR}$ | 2262 | $V_{peak}$ |

**Note**

- According to DIN EN60747-5-5 (see figure 4). This optocoupler is suitable for safe electrical isolation only within the safety ratings. Compliance with the safety ratings shall be ensured by means of suitable protective circuits.

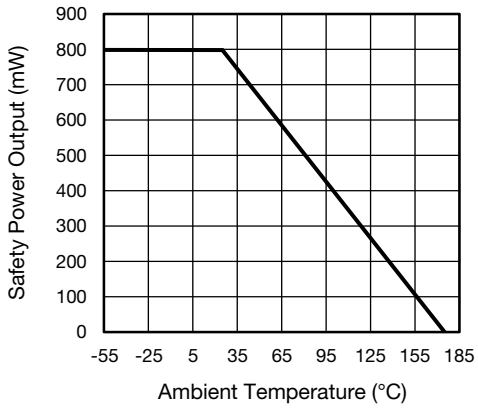


Fig. 4 - Safety Power Dissipation vs. Ambient Temperature

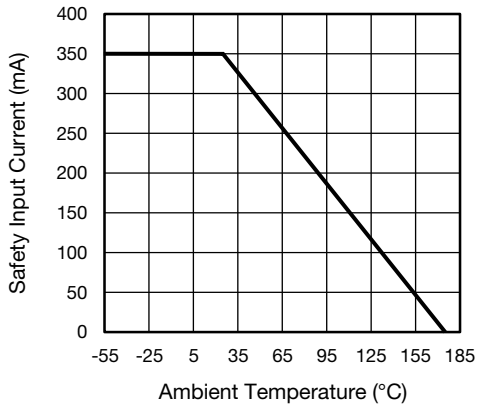


Fig. 5 - Safety Input Current vs. Ambient Temperature


For technical questions, contact: optocoupleranswers@vishay.com
THIS DOCUMENT IS SUBJECT TO CHANGE WITHOUT NOTICE. THE PRODUCTS DESCRIBED HEREIN AND THIS DOCUMENT ARE SUBJECT TO SPECIFIC DISCLAIMERS, SET FORTH AT www.vishay.com/doc?91000

**TYPICAL CHARACTERISTICS** ($T_{amb}$ = 25 °C, unless otherwise specified)

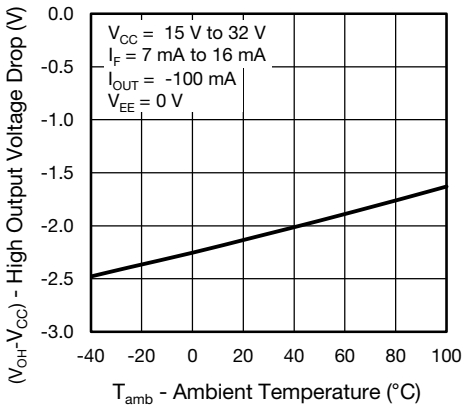


Fig. 6 - High Output Voltage Drop vs. Ambient Temperature

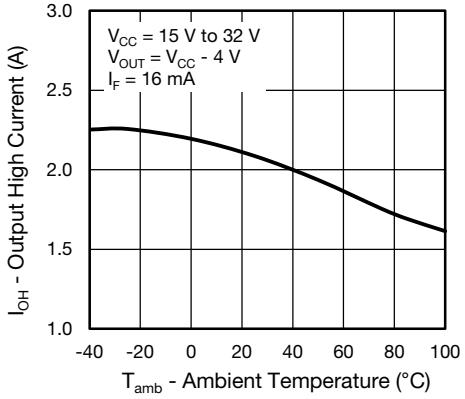


Fig. 7 - Output High Current vs. Ambient Temperature

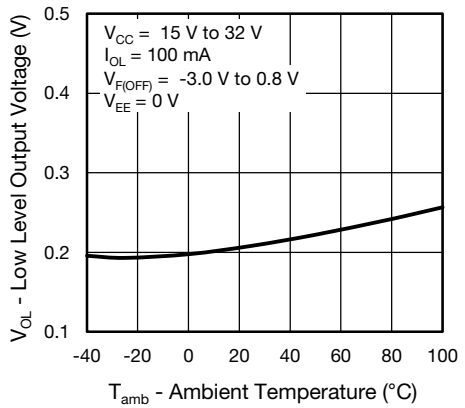


Fig. 8 - Low Level Output Voltage vs. Ambient Temperature

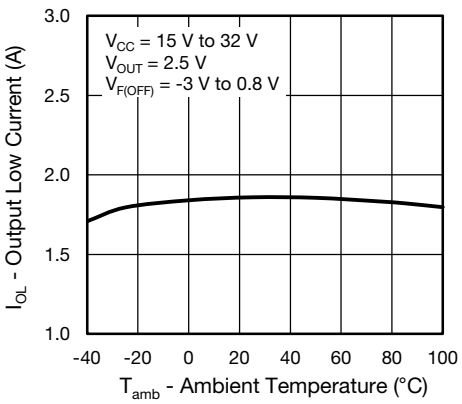


Fig. 9 - Output Low Current vs. Ambient Temperature

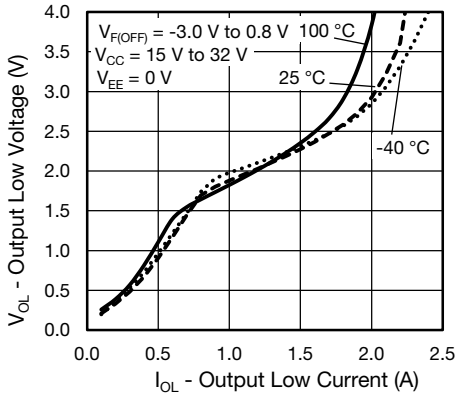


Fig. 10 - Output Low Voltage vs. Output Low Current

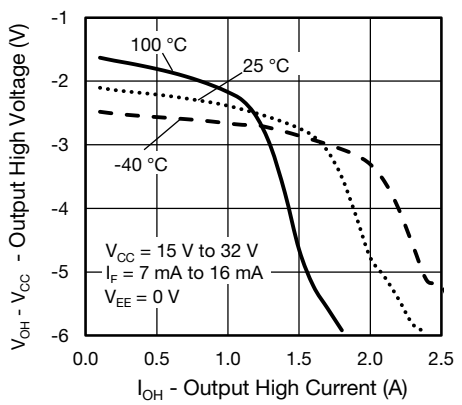


Fig. 11 - Output High Voltage vs. Output High Current


For technical questions, contact: optocoupleranswers@vishay.com
THIS DOCUMENT IS SUBJECT TO CHANGE WITHOUT NOTICE. THE PRODUCTS DESCRIBED HEREIN AND THIS DOCUMENT ARE SUBJECT TO SPECIFIC DISCLAIMERS, SET FORTH AT www.vishay.com/doc?91000

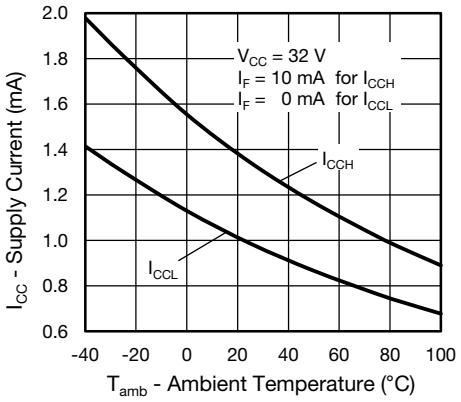


Fig. 12 - Supply Current vs. Ambient Temperature

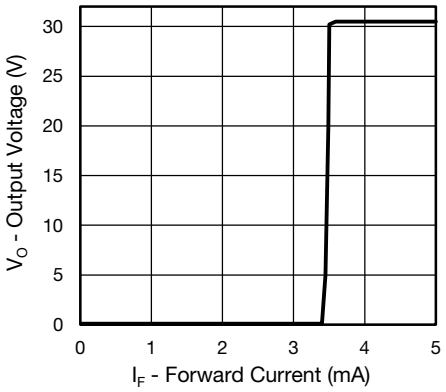


Fig. 15 - Output Voltage vs. Forward Current

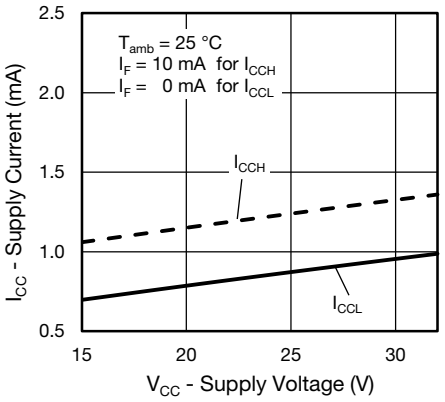


Fig. 13 - Supply Current vs. Supply Voltage

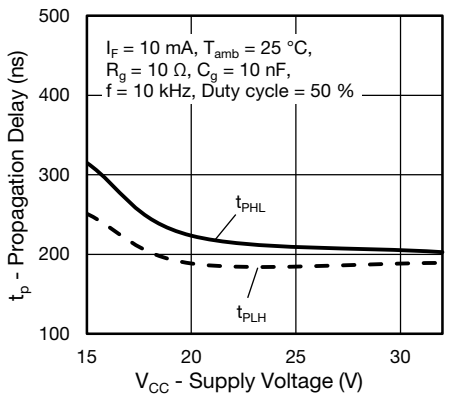


Fig. 16 - Propagation Delay vs. Supply Voltage

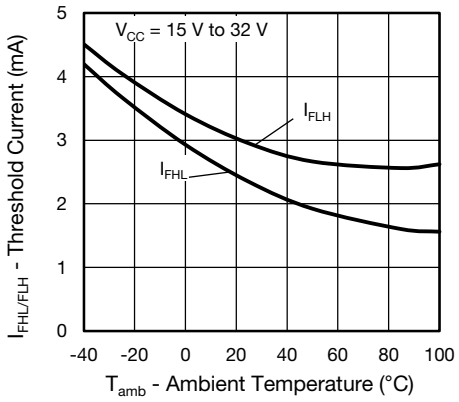


Fig. 14 - threshold Current vs. Ambient Temperature

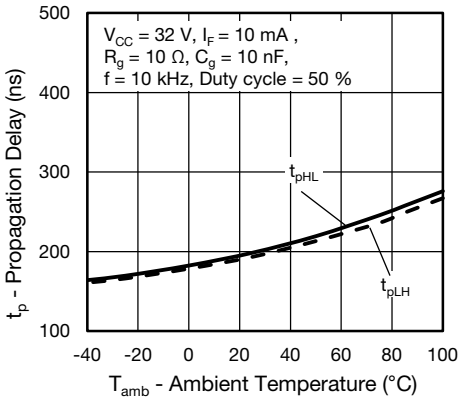


Fig. 17 - Propagation Delay vs. Ambient Temperature


For technical questions, contact: optocoupleranswers@vishay.com
THIS DOCUMENT IS SUBJECT TO CHANGE WITHOUT NOTICE. THE PRODUCTS DESCRIBED HEREIN AND THIS DOCUMENT ARE SUBJECT TO SPECIFIC DISCLAIMERS, SET FORTH AT www.vishay.com/doc?91000

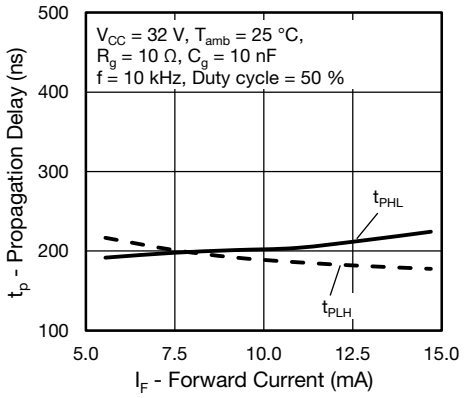


Fig. 18 - Propagation Delay vs. Forward Current

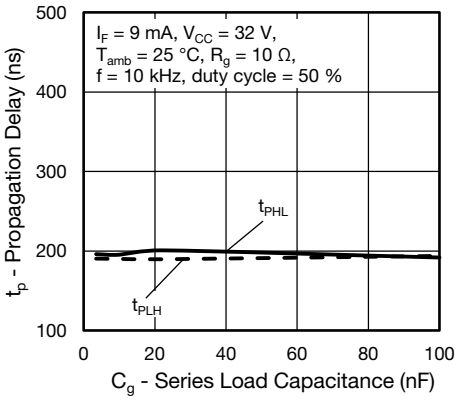


Fig. 20 - Propagation Delay vs. Series Load Capacitance

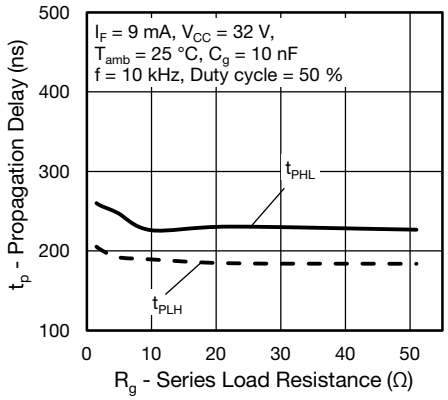


Fig. 19 - Propagation Delay vs. Series Load Resistance

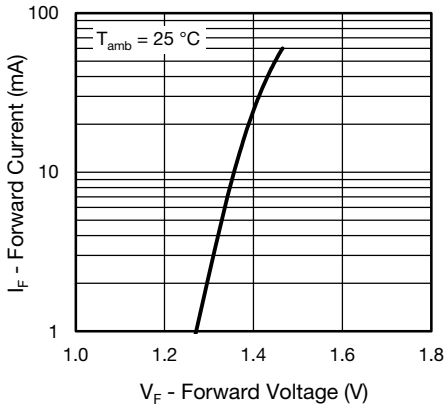


Fig. 21 - Forward Current vs. Forward Voltage


For technical questions, contact: optocoupleranswers@vishay.com
THIS DOCUMENT IS SUBJECT TO CHANGE WITHOUT NOTICE. THE PRODUCTS DESCRIBED HEREIN AND THIS DOCUMENT ARE SUBJECT TO SPECIFIC DISCLAIMERS, SET FORTH AT www.vishay.com/doc?91000

## PACKAGE DIMENSIONS (in millimeters)

### DIP-8, Widebody, 400 mil

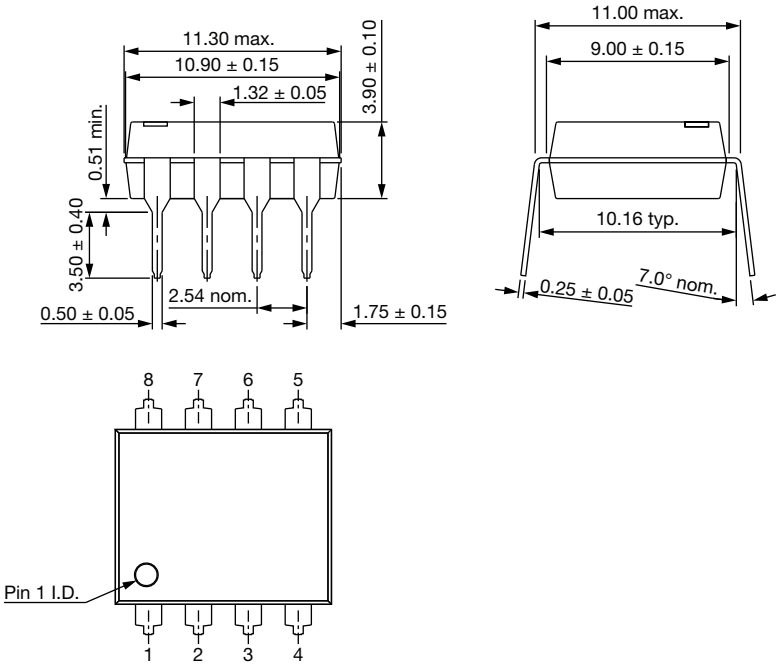


### SMD-8, Widebody, 400 mil (option 7)

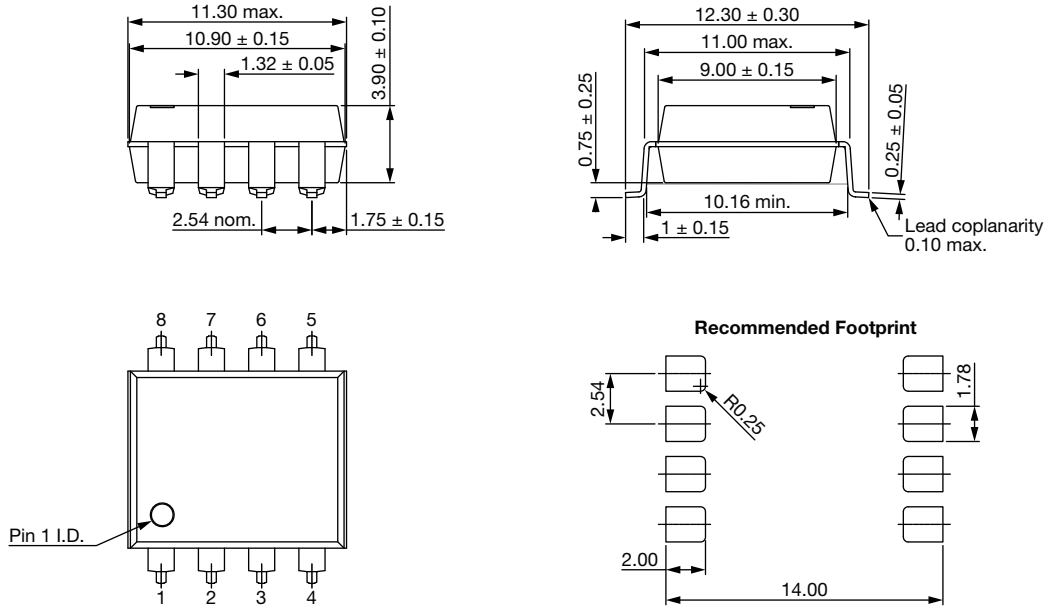



For technical questions, contact: optocoupleranswers@vishay.com
THIS DOCUMENT IS SUBJECT TO CHANGE WITHOUT NOTICE. THE PRODUCTS DESCRIBED HEREIN AND THIS DOCUMENT ARE SUBJECT TO SPECIFIC DISCLAIMERS, SET FORTH AT www.vishay.com/doc?91000

## PACKAGE MARKING

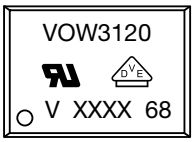


Fig. 22 - Example of VOW3120-X017T

**Notes**

- XXXX = LMC (lot marking code)
- The VDE logo is only marked on option 1 parts
- Tape and reel (T) and package option (option 7) is not part of the package markings

## PACKING INFORMATION (in millimeters)

### Tubes

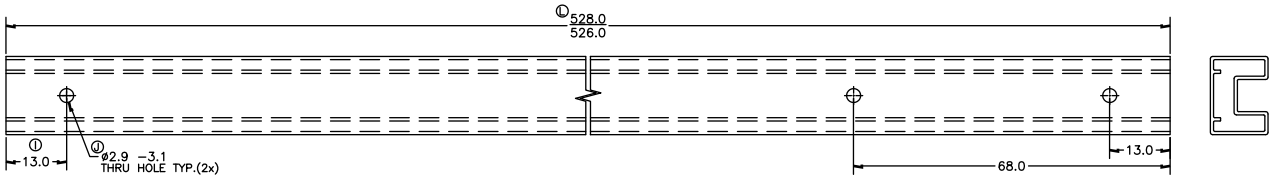


| DEVICE PER TUBE | | | |
|---|---|---|---|
| **TYPE** | **UNITS/TUBE** | **TUBE/BOX** | **UNITS/BOX** |
| DIP-8, widebody, 400 mil | 40 | 30 | 1200 |

### DIP-8, Widebody, 400 mil

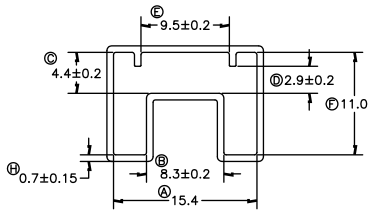


1. ALL TUBE TOLERANCES TO BE ±0.25 UNLESS OTHERWISE SPECIFIED.
2. ALL RADII AND ANGLES REFERENCE ONLY, UNLESS OTHERWISE SPECIFIED.

Fig. 23 - Tape and Reel Shipping Medium

### Tape and Reel

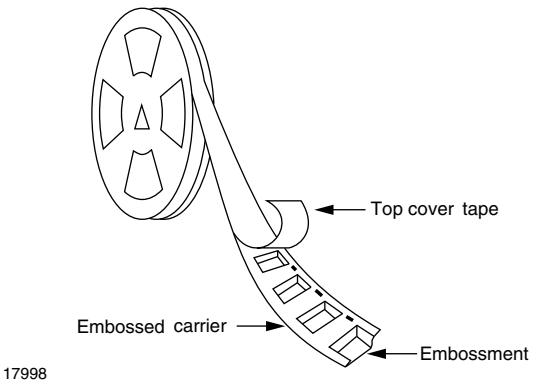


Fig. 24 - Tape and Reel Shipping Medium

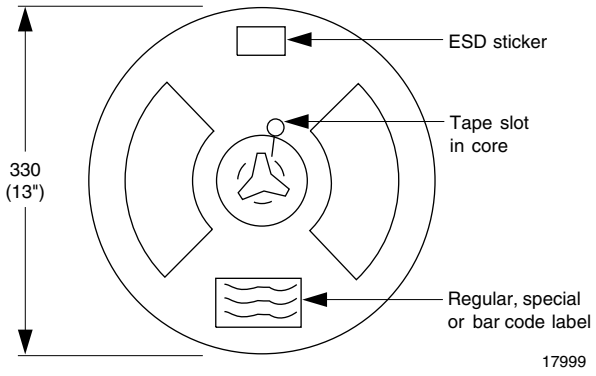


Fig. 25 - Tape and Reel Shipping Medium


For technical questions, contact: optocoupleranswers@vishay.com
THIS DOCUMENT IS SUBJECT TO CHANGE WITHOUT NOTICE. THE PRODUCTS DESCRIBED HEREIN AND THIS DOCUMENT ARE SUBJECT TO SPECIFIC DISCLAIMERS, SET FORTH AT www.vishay.com/doc?91000

**SMD-8, Widebody, 400 mil (option 7)**

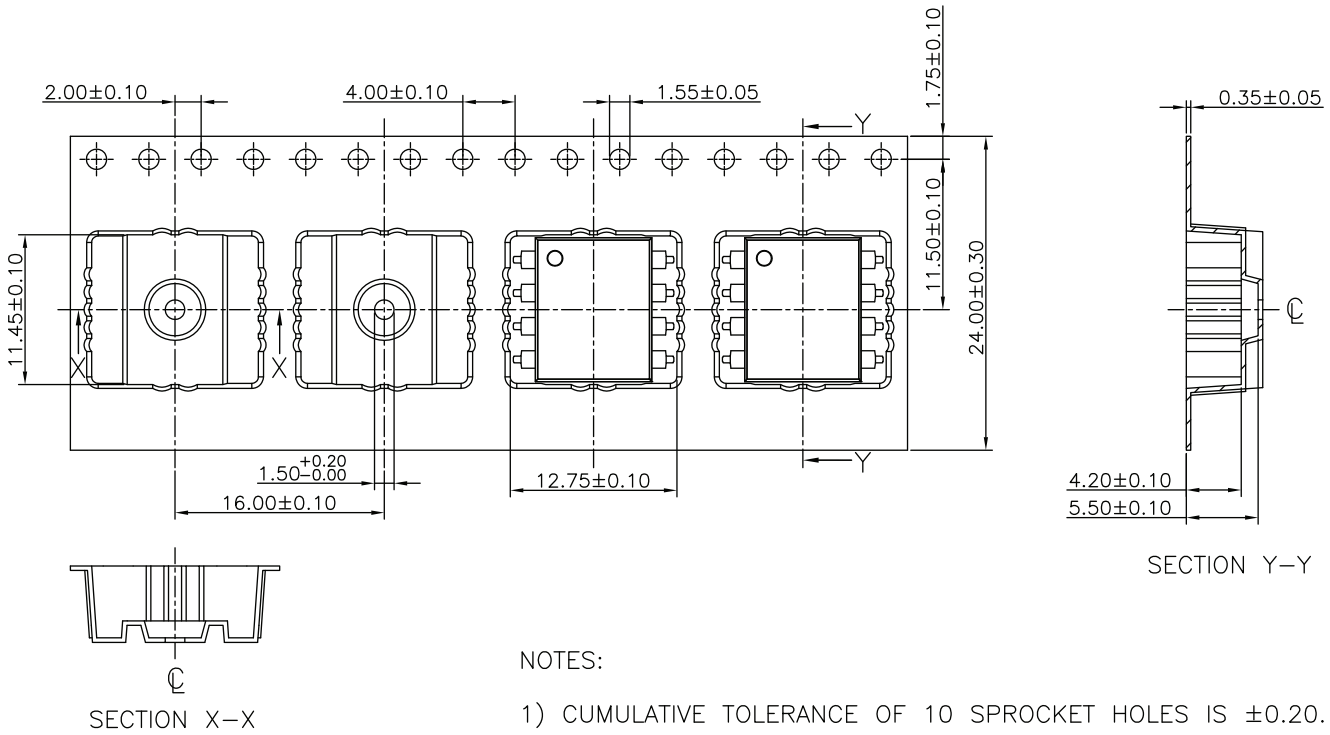


Fig. 26 - Tape and Reel Packing (750 parts per reel)

## SOLDER PROFILES

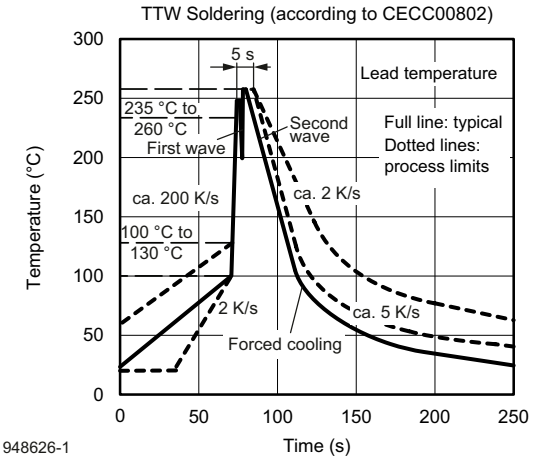


Fig. 27 - Wave Soldering Double Wave Profile According to J-STD-020 for DIP Devices

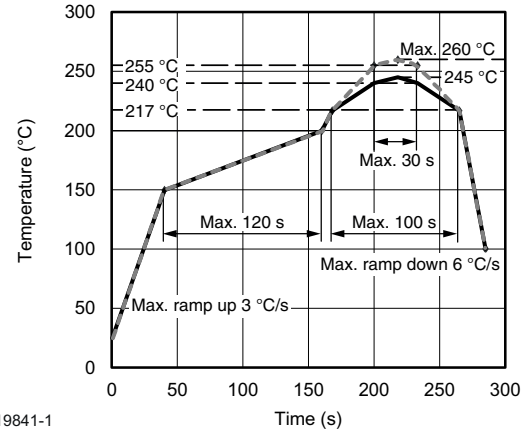


Fig. 28 - Lead (Pb)-free Reflow Solder Profile According to J-STD-020 for SMD Devices

## HANDLING AND STORAGE CONDITIONS

ESD level: HBM class 2

Floor life: unlimited

Conditions: $T_{amb}$ < 30 °C, RH < 85 %

Moisture sensitivity level 1, according to J-STD-020


For technical questions, contact: optocoupleranswers@vishay.com
THIS DOCUMENT IS SUBJECT TO CHANGE WITHOUT NOTICE. THE PRODUCTS DESCRIBED HEREIN AND THIS DOCUMENT ARE SUBJECT TO SPECIFIC DISCLAIMERS, SET FORTH AT www.vishay.com/doc?91000

# Disclaimer

ALL PRODUCT, PRODUCT SPECIFICATIONS AND DATA ARE SUBJECT TO CHANGE WITHOUT NOTICE TO IMPROVE RELIABILITY, FUNCTION OR DESIGN OR OTHERWISE.

Vishay Intertechnology, Inc., its affiliates, agents, and employees, and all persons acting on its or their behalf (collectively, “Vishay”), disclaim any and all liability for any errors, inaccuracies or incompleteness contained in any datasheet or in any other disclosure relating to any product.

Vishay makes no warranty, representation or guarantee regarding the suitability of the products for any particular purpose or the continuing production of any product. To the maximum extent permitted by applicable law, Vishay disclaims (i) any and all liability arising out of the application or use of any product, (ii) any and all liability, including without limitation special, consequential or incidental damages, and (iii) any and all implied warranties, including warranties of fitness for particular purpose, non-infringement and merchantability.

Statements regarding the suitability of products for certain types of applications are based on Vishay's knowledge of typical requirements that are often placed on Vishay products in generic applications. Such statements are not binding statements about the suitability of products for a particular application. It is the customer's responsibility to validate that a particular product with the properties described in the product specification is suitable for use in a particular application. Parameters provided in datasheets and / or specifications may vary in different applications and performance may vary over time. All operating parameters, including typical parameters, must be validated for each customer application by the customer's technical experts. Product specifications do not expand or otherwise modify Vishay's terms and conditions of purchase, including but not limited to the warranty expressed therein.

Hyperlinks included in this datasheet may direct users to third-party websites. These links are provided as a convenience and for informational purposes only. Inclusion of these hyperlinks does not constitute an endorsement or an approval by Vishay of any of the products, services or opinions of the corporation, organization or individual associated with the third-party website. Vishay disclaims any and all liability and bears no responsibility for the accuracy, legality or content of the third-party website or for that of subsequent links.

Except as expressly indicated in writing, Vishay products are not designed for use in medical, life-saving, or life-sustaining applications or for any other application in which the failure of the Vishay product could result in personal injury or death. Customers using or selling Vishay products not expressly indicated for use in such applications do so at their own risk. Please contact authorized Vishay personnel to obtain written terms and conditions regarding products designed for such applications.

No license, express or implied, by estoppel or otherwise, to any intellectual property rights is granted by this document or by any conduct of Vishay. Product names and markings noted herein may be trademarks of their respective owners.

*© 2024 VISHAY INTERTECHNOLOGY, INC. ALL RIGHTS RESERVED*