High Speed Optocoupler, 1 MBd, Schmitt Trigger



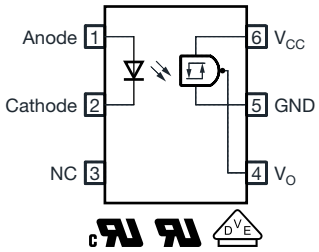

23030

DESIGN SUPPORT TOOLS AVAILABLE

3D Models | Design Tools | Related Documents | SPICE Models

DESCRIPTION

The VOH1016A is a single channel 1 MBd optocoupler utilizing a high efficient input LED coupled with an integrated optical photodiode IC detector. The detector has an open collector transistor output with Schmitt-Trigger functionality. The low turn-on threshold and low supply current together with a guaranteed common mode transient immunity of 10 kV/µs makes the VOH1016A to a perfect solution for galvanic noise isolation or to break up ground loops in digital applications. The wide power supply range up to 15 V enables isolated level shifting in applications using different voltage domains.

FEATURES

- High data rate 2 MHz (NRZ)
- Latch up and oscillation free
- Low turn-on threshold current 2 mA
- Logic compatible output
- Guaranteed on / off threshold hysteresis
- Wide supply voltage range 3 V to 15 V
- Minimum common mode transient immunity (CMTI) 10 kV/µs
- Material categorization: for definitions of compliance please see www.vishay.com/doc?99912

Pb-free

e3

RoHS COMPLIANT

APPLICATIONS

- Microprocessor system interface
- Ground loop elimination
- Galvanic noise isolation
- Serial bus systems
- Digital control power supply
- Signal level translation
- PLC, ATE input / output isolation
- Computer peripheral interface

AGENCY APPROVALS

- UL 1577
- cUL 1577
- DIN EN 60747-5-5 (VDE 0884-5) available with option “V”

ORDERING INFORMATION

V	O	H	1	0	1	6	A	#	-	V	T	#

PART NUMBER | PACKAGE OPTION | VDE OPTION | TAPE AND REEL

AGENCY CERTIFIED / PACKAGE	CMTI (kV/µs)
UL, cUL	**10**
DIP-6	VOH1016AD
DIP-6, 400 mil	VOH1016AG
SMD-6	VOH1016AB-T
SMD-6, 180° oriented	VOH1016AB-T2
VDE, UL, cUL	**10**
DIP-6	VOH1016AD-V
DIP-6, 400 mil	VOH1016AG-V
SMD-6	VOH1016AB-VT
SMD-6, 180° oriented	VOH1016AB-VT2

For technical questions, contact: optocoupleranswers@vishay.com

THIS DOCUMENT IS SUBJECT TO CHANGE WITHOUT NOTICE. THE PRODUCTS DESCRIBED HEREIN AND THIS DOCUMENT ARE SUBJECT TO SPECIFIC DISCLAIMERS, SET FORTH AT www.vishay.com/doc?91000

TRUTH TABLE (positive logic)	
LED	**OUTPUT**
On	L
Off	H

ABSOLUTE MAXIMUM RATINGS (T_{amb} = 25 °C, unless otherwise specified)				
PARAMETER	**CONDITIONS**	**SYMBOL**	**VALUE**	**UNIT**
INPUT				
Forward current		I_F	50	mA
Reverse voltage		V_R	6	V
Power dissipation		P_{diss}	120	mW
OUTPUT				
Supply voltage		V_{CC}	16	V
Output voltage		V_O	V_{CC}	V
Output current		I_O	50	mA
Power dissipation		P_{diss}	130	mW
COUPLER				
Power dissipation		P_{diss}	250	mW
Storage temperature		T_{stg}	-55 to +150	°C
Operating temperature		T_{amb}	-40 to +110	°C
Solder temperature	For 10 s	T_{sld}	260	°C

Note

- Stresses in excess of the absolute maximum ratings can cause permanent damage to the device. Functional operation of the device is not implied at these or any other conditions in excess of those given in the operational sections of this document. Exposure to absolute maximum ratings for extended periods of the time can adversely affect reliability

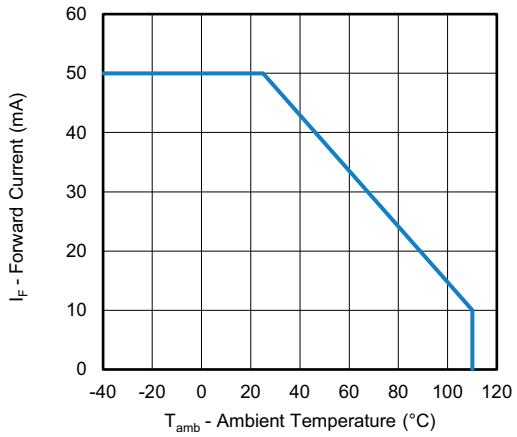

Fig. 1 - Forward Current vs. Ambient Temperature

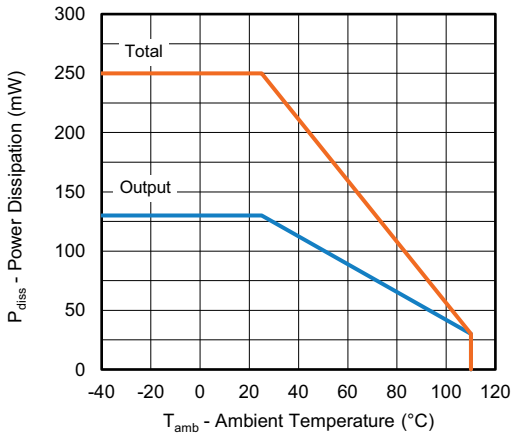

Fig. 2 - Power Dissipation vs. Ambient Temperature

For technical questions, contact: optocoupleranswers@vishay.com
THIS DOCUMENT IS SUBJECT TO CHANGE WITHOUT NOTICE. THE PRODUCTS DESCRIBED HEREIN AND THIS DOCUMENT ARE SUBJECT TO SPECIFIC DISCLAIMERS, SET FORTH AT www.vishay.com/doc?91000

ELECTRICAL CHARACTERISTICS (T_{amb} = 25 °C, unless otherwise specified)						
PARAMETER	**TEST CONDITION**	**SYMBOL**	**MIN.**	**TYP.**	**MAX.**	**UNIT**
INPUT						
Forward voltage	I_F = 4 mA	V_F	-	1.1	1.4	V
	I_F = 0.3 mA		0.7	1.0	-	
Reverse current	V_R = 3 V	I_R	-	-	10	µA
Input capacitance	f = 1 MHz, V_F = 0 V	C_{IN}	-	30	250	pF
OUTPUT						
Supply voltage		V_{CC}	3	-	15	V
High level supply current	I_F = 0 mA, V_{CC} = 5 V	I_{CCH}	-	0.55	1.0	mA
Low level supply current	I_F = 4 mA, V_{CC} = 5 V	I_{CCL}	-	0.55	1.0	mA
High level output current	V_{CC} = V_O = 15 V, I_F = 0 mA	I_{OH}	-	-	100	µA
Low level output voltage	V_{CC} = 5 V, I_F = 4 mA, I_{OL} = 16 mA	V_{OL}	-	0.2	0.4	V
Turn-On threshold current	V_{CC} = 5 V, R_L = 280 Ω	$I_{F(on)}$	-	0.65	2.0	mA
Turn-Off threshold current	V_{CC} = 5 V, R_L = 280 Ω	$I_{F(off)}$	0.4	0.6	-	mA
Hysteresis ratio	V_{CC} = 5 V, R_L = 280 Ω	$I_{F(off)}/I_{F(on)}$	0.5	0.9	0.95	

Note

- Minimum and maximum values are testing requirements. Typical values are characteristics of the device and are the result of engineering evaluation. Typical values are for information only and are not part of the testing requirements

SWITCHING CHARACTERISTICS (T_{amb} = 25 °C, unless otherwise specified)						
PARAMETER	**TEST CONDITION**	**SYMBOL**	**MIN.**	**TYP.**	**MAX.**	**UNIT**
Propagation delay time to high output level	R_L = 280 Ω, V_{CC} = 5 V, I_F = 4 mA	t_{PLH}	-	0.25	2	µs
Propagation delay time to low output level		t_{PHL}	-	0.05	1.2	µs
Rise time		t_r	-	0.05	0.5	µs
Fall time		t_f	-	0.04	0.5	µs
Data rate			-	2	-	MHz

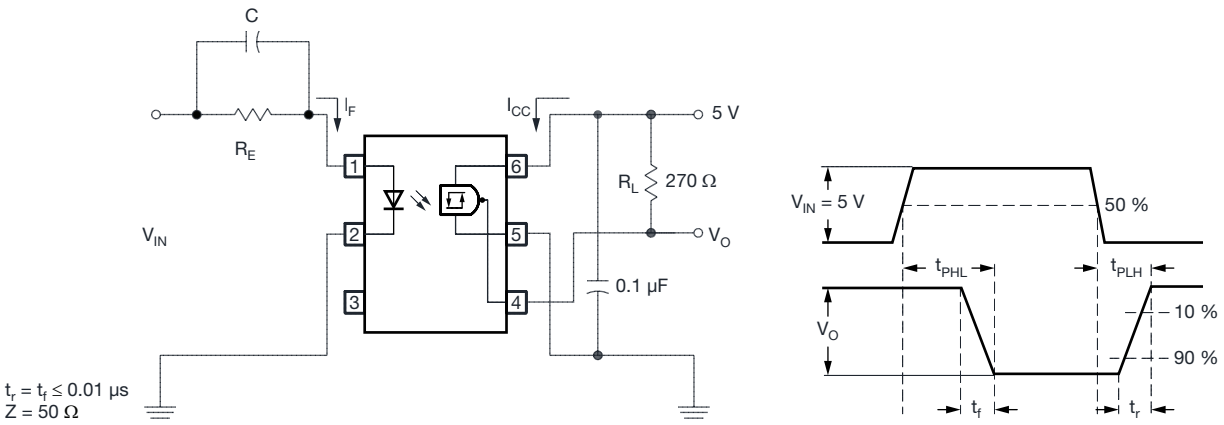

Fig. 3 - Test Circuit for t_{on}, t_{off}, t_r, and t_f

For technical questions, contact: optocoupleranswers@vishay.com
THIS DOCUMENT IS SUBJECT TO CHANGE WITHOUT NOTICE. THE PRODUCTS DESCRIBED HEREIN AND THIS DOCUMENT ARE SUBJECT TO SPECIFIC DISCLAIMERS, SET FORTH AT www.vishay.com/doc?91000

COMMON MODE TRANSIENT IMMUNITY (T_{amb} = 25 °C, unless otherwise specified)						
PARAMETER	**TEST CONDITION**	**SYMBOL**	**MIN.**	**TYP.**	**MAX.**	**UNIT**
Common mode transient immunity	R_L = 270 Ω, V_{CC} = 5 V, V_{CM} = 1000 V, I_F = 0 mA	$\|CM_H\|$	10	-	-	kV/µs
	R_L = 270 Ω, V_{CC} = 5 V, V_{CM} = 1000 V, I_F = $I_{F(on)}$ (max.)	$\|CM_L\|$	10	-	-	kV/µs

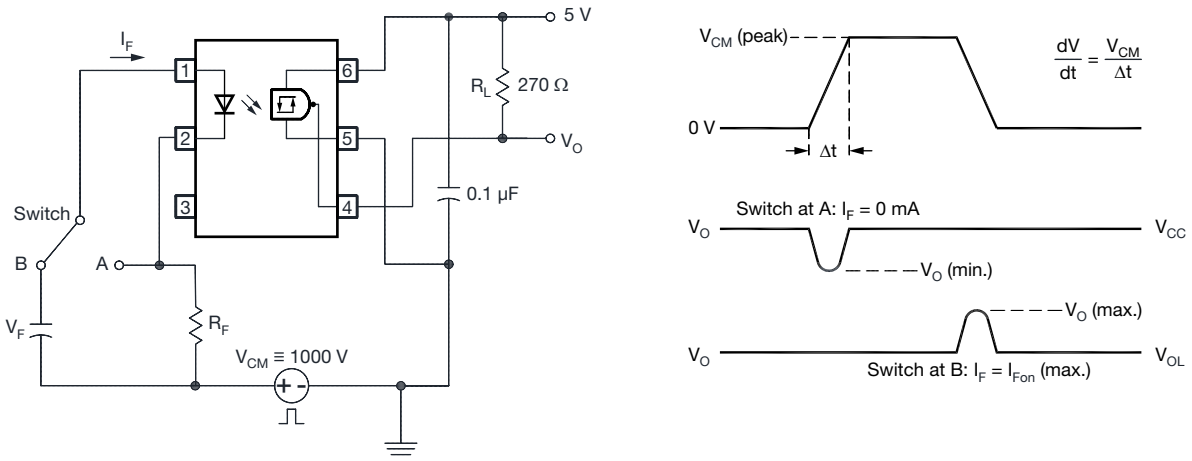

Fig. 4 - Test Circuit for Common Mode Transient Immunity

SAFETY AND INSULATION RATINGS (T_{amb} = 25 °C, unless otherwise specified)				
PARAMETER	**TEST CONDITION**	**SYMBOL**	**VALUE**	**UNIT**
Comparative tracking index	Insulation group IIIa	CTI	175	
Maximum rated withstanding isolation voltage	According to UL1577, t = 1 min	V_{ISO}	5000	V_{RMS}
Maximum transient isolation voltage	According to DIN EN 60747-5-5	V_{IOTM}	6000	V_{peak}
Maximum repetitive peak isolation voltage	According to DIN EN 60747-5-5	V_{IORM}	630	V_{peak}
Isolation resistance	T_{amb} = 25 °C, V_{IO} = 500 V	R_{IO}	10^{12}	Ω
	T_{amb} = 100 °C, V_{IO} = 500 V	R_{IO}	10^{11}	Ω
Output safety power		P_{SO}	150	mW
Input safety current		I_{SI}	20	mA
Input safety temperature		T_S	175	°C
Creepage distance			> 7	mm
Clearance distance			> 7	mm
Insulation thickness		DTI	> 0.4	mm

For technical questions, contact: optocoupleranswers@vishay.com
THIS DOCUMENT IS SUBJECT TO CHANGE WITHOUT NOTICE. THE PRODUCTS DESCRIBED HEREIN AND THIS DOCUMENT ARE SUBJECT TO SPECIFIC DISCLAIMERS, SET FORTH AT www.vishay.com/doc?91000

TYPICAL CHARACTERISTICS (T_{amb} = 25 °C, unless otherwise specified)

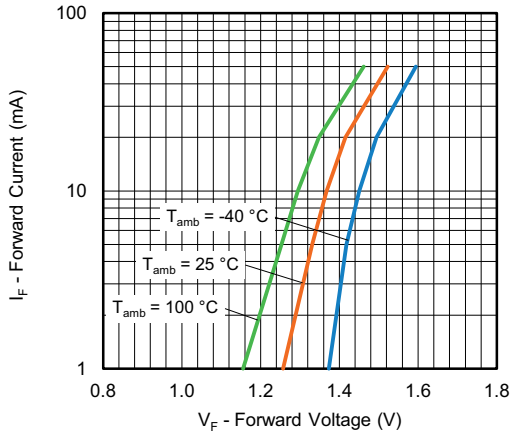

Fig. 5 - Forward Current vs. Forward Voltage

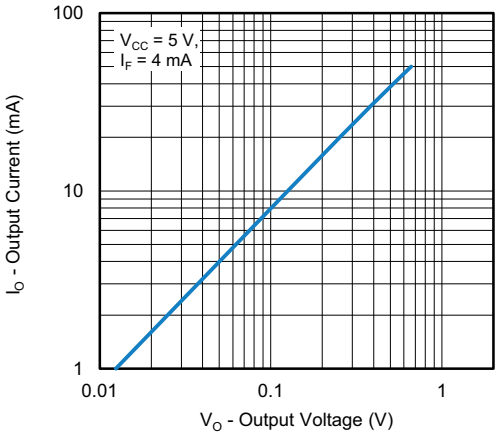

Fig. 8 - Output Current vs. Output Voltage

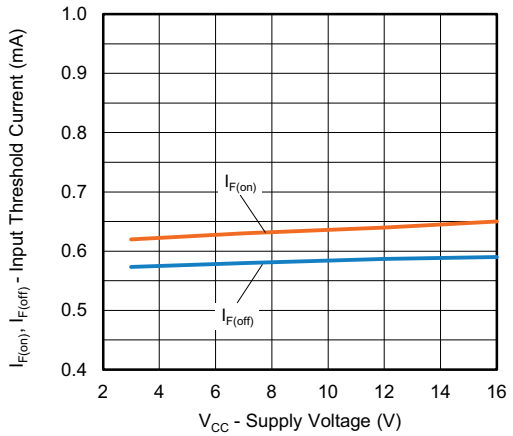

Fig. 6 - Input Threshold Current vs. Supply Voltage

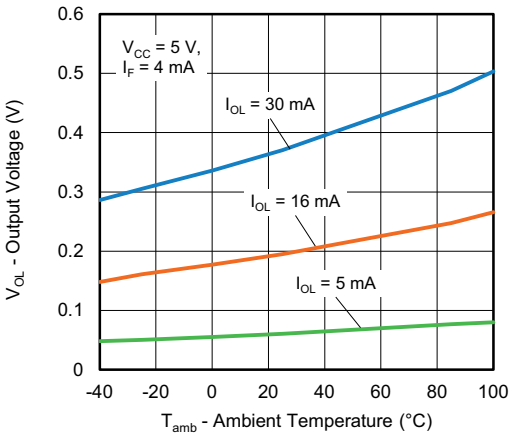

Fig. 9 - Output Voltage vs. Ambient Temperature

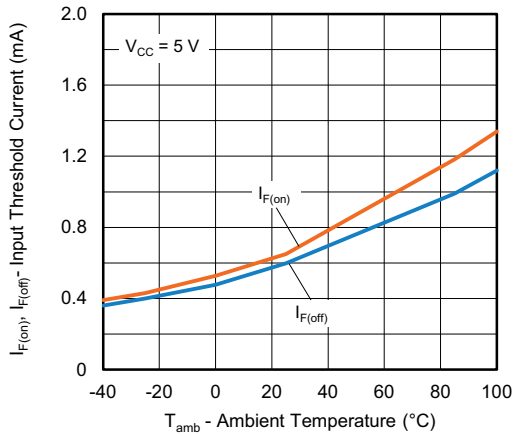

Fig. 7 - Input Threshold Current vs. Ambient Temperature

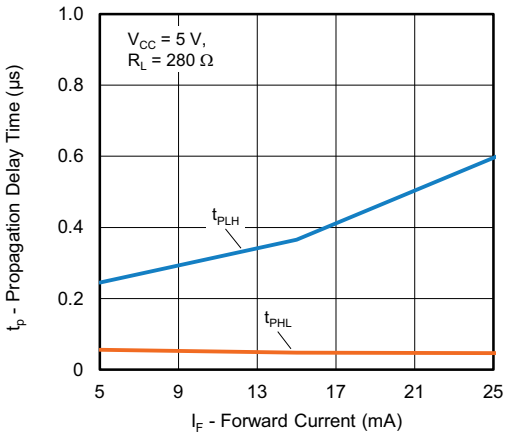

Fig. 10 - Propagation Delay Time vs. Forward Current

For technical questions, contact: optocoupleranswers@vishay.com
THIS DOCUMENT IS SUBJECT TO CHANGE WITHOUT NOTICE. THE PRODUCTS DESCRIBED HEREIN AND THIS DOCUMENT ARE SUBJECT TO SPECIFIC DISCLAIMERS, SET FORTH AT www.vishay.com/doc?91000

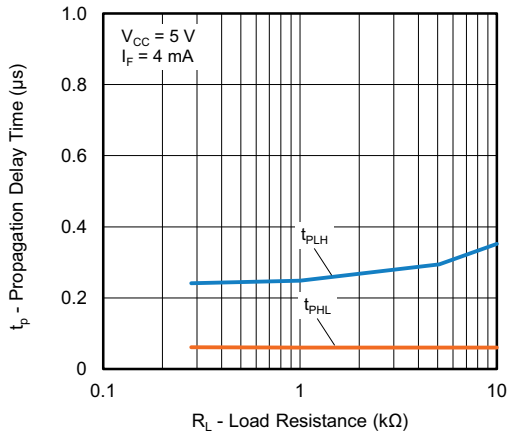

Fig. 11 - Propagation Delay Time vs. Load Resistance

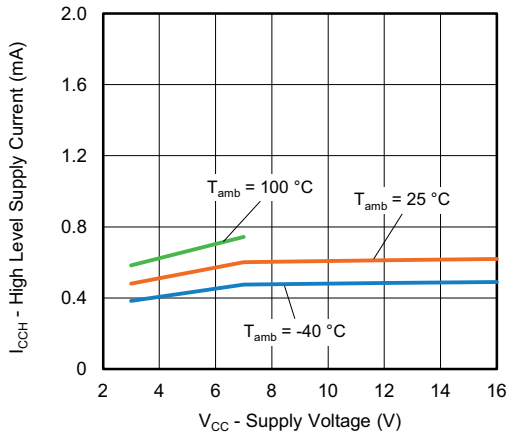

Fig. 12 - High Level Supply Current vs. Supply Voltage

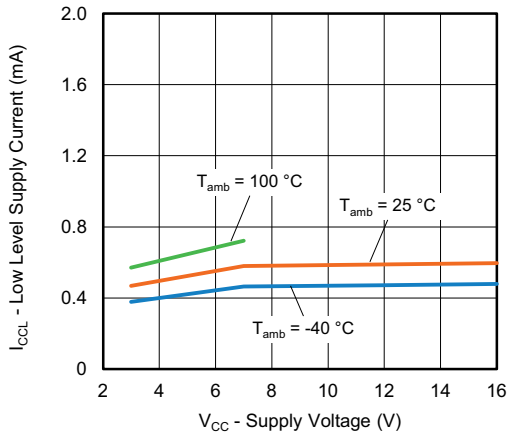

Fig. 13 - Low Level Supply Current vs. Supply Voltage

For technical questions, contact: optocoupleranswers@vishay.com
THIS DOCUMENT IS SUBJECT TO CHANGE WITHOUT NOTICE. THE PRODUCTS DESCRIBED HEREIN AND THIS DOCUMENT ARE SUBJECT TO SPECIFIC DISCLAIMERS, SET FORTH AT www.vishay.com/doc?91000

PACKAGE DIMENSIONS (in millimeters)

DIP-6

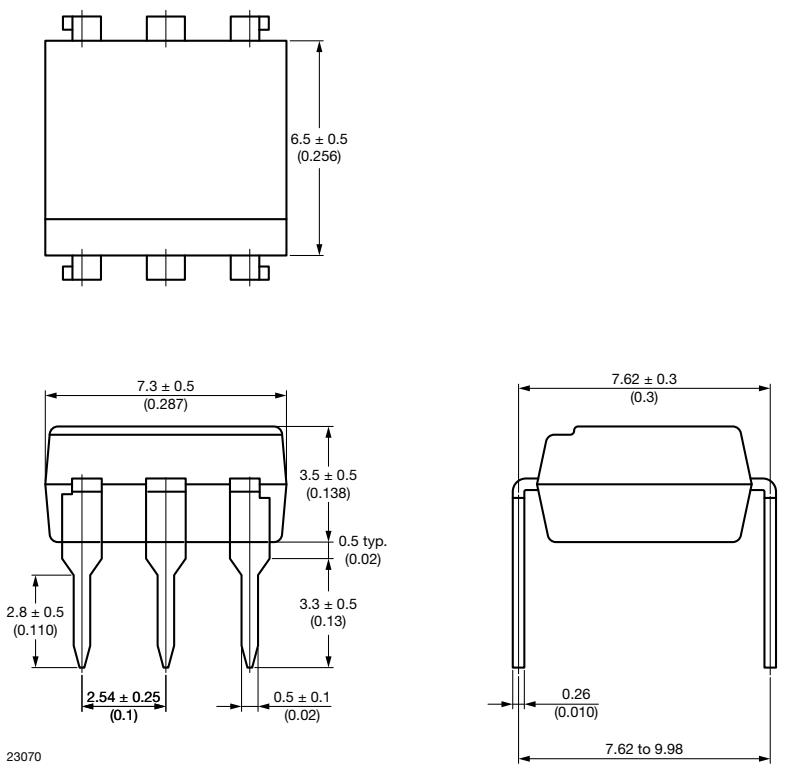

Fig. 1

DIP-6, 400 mil

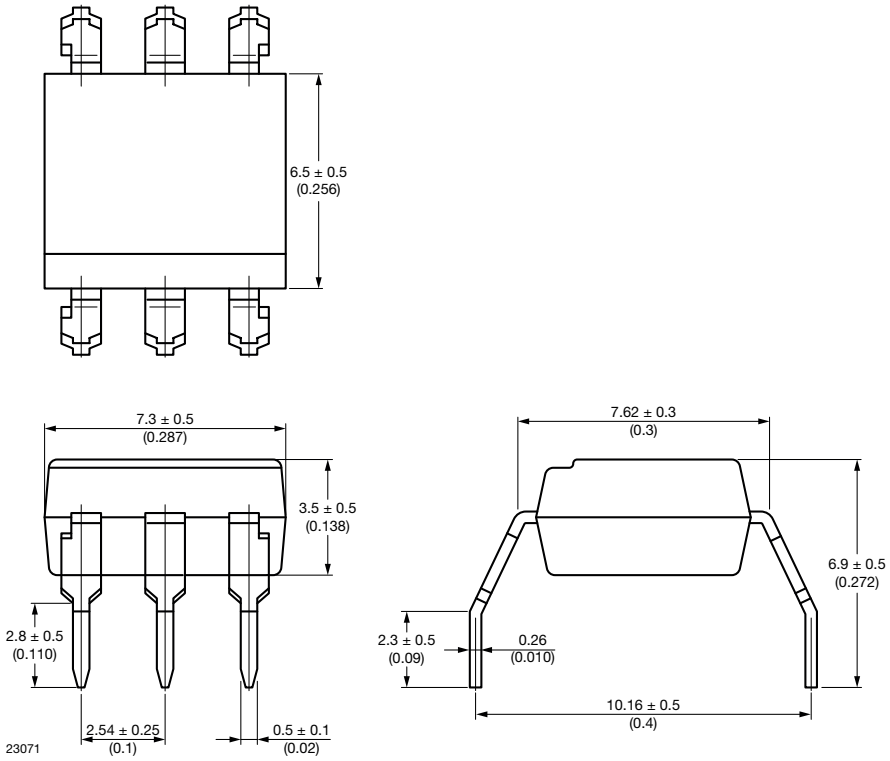

Fig. 2

For technical questions, contact: optocoupleranswers@vishay.com
THIS DOCUMENT IS SUBJECT TO CHANGE WITHOUT NOTICE. THE PRODUCTS DESCRIBED HEREIN AND THIS DOCUMENT ARE SUBJECT TO SPECIFIC DISCLAIMERS, SET FORTH AT www.vishay.com/doc?91000

SMD-6

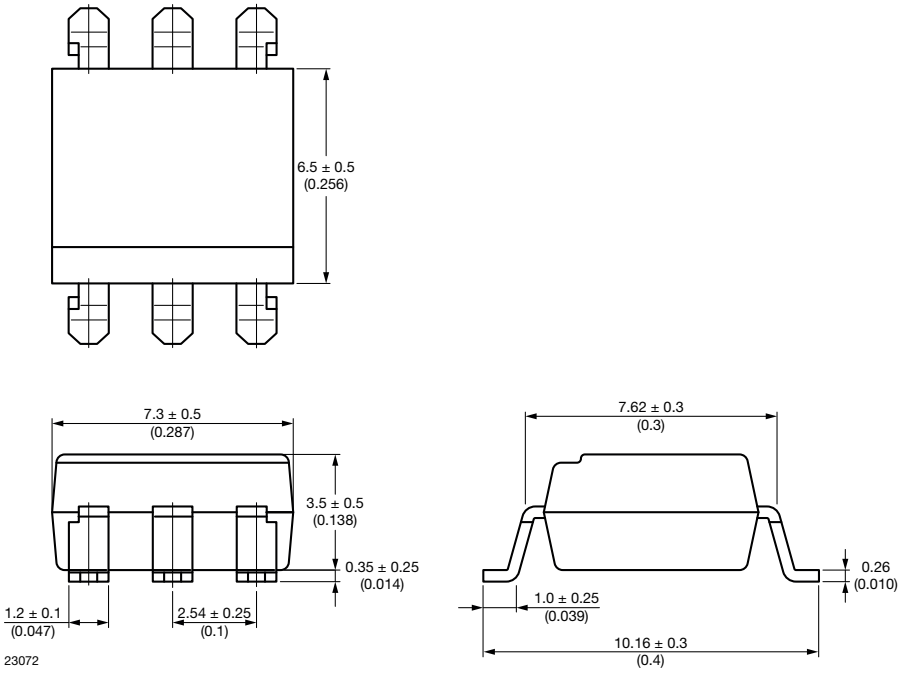

Fig. 3

PACKAGE MARKING

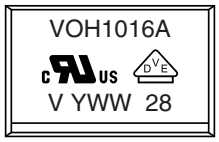

Fig. 14 - Example of VOH1016AB-VT

Notes

- "YWW" is the date code marking (Y = year code, WW = week code)
- VDE logo is only marked on option "V" parts
- Tape and reel suffix (T) is not part of the package marking

For technical questions, contact: optocoupleranswers@vishay.com
THIS DOCUMENT IS SUBJECT TO CHANGE WITHOUT NOTICE. THE PRODUCTS DESCRIBED HEREIN AND THIS DOCUMENT ARE SUBJECT TO SPECIFIC DISCLAIMERS, SET FORTH AT www.vishay.com/doc?91000

PACKING INFORMATION (in millimeters)

DEVICES PER TUBES			
TYPE	**UNITS/TUBE**	**TUBES/BOX**	**UNITS/BOX**
DIP-6	50	40	2000
DIP-6, 400 mil	50	40	2000

Tape SMD-6

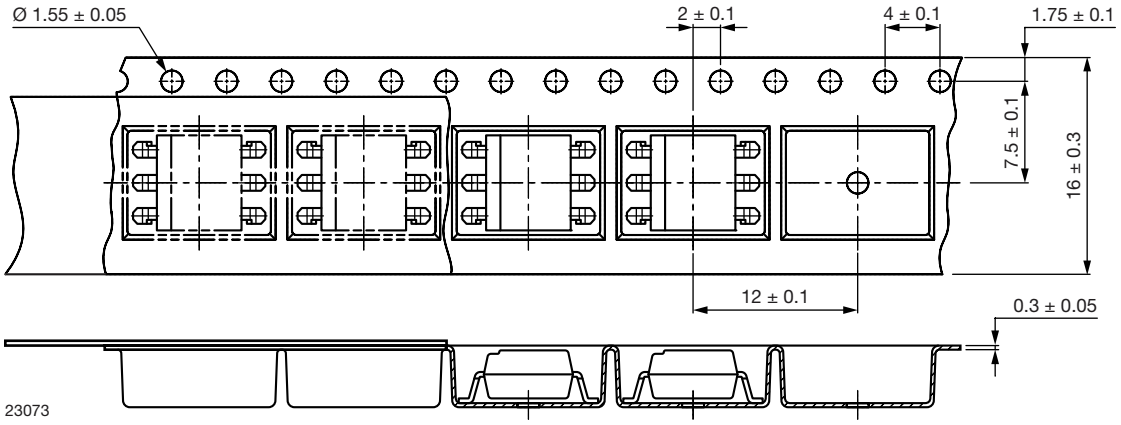

Fig. 15 - Tape and Reel Packaging (1000 pieces on reel)

Tape SMD-6, 180° orientation

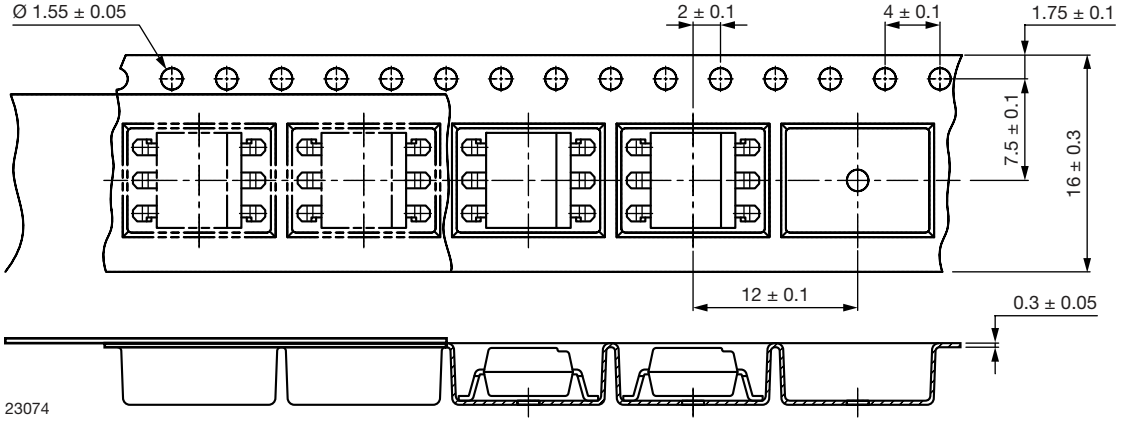

Fig. 16 - Tape and Reel Packaging (1000 pieces on reel)

For technical questions, contact: optocoupleranswers@vishay.com
THIS DOCUMENT IS SUBJECT TO CHANGE WITHOUT NOTICE. THE PRODUCTS DESCRIBED HEREIN AND THIS DOCUMENT ARE SUBJECT TO SPECIFIC DISCLAIMERS, SET FORTH AT www.vishay.com/doc?91000

Reel

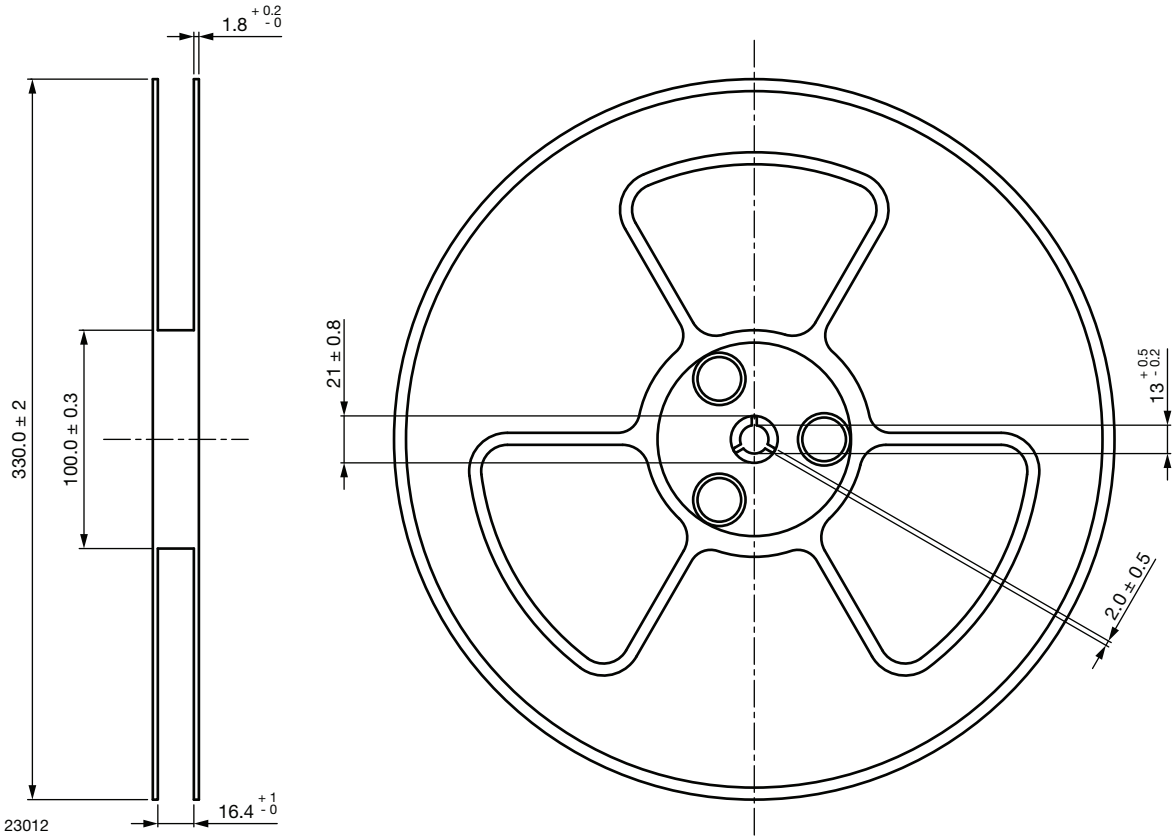

Fig. 17 - Tape and Reel Shipping Medium

SOLDER PROFILES

IR Reflow Soldering (JEDEC® J-STD-020C compliant)

One time soldering reflow is recommended within the condition of temperature and time profile shown below. Do not solder more than three times.

PROFILE ITEM	CONDITIONS
Preheat	
- Temperature minimum ($T_{S\ min.}$)	150 °C
- Temperature maximum ($T_{S\ max.}$)	200 °C
- Time (min. to max.) (t_S)	90 s ± 30 s
Soldering zone	
- Temperature (T_L)	217 °C
- Time (t_L)	60 s
Peak temperature (T_p)	260 °C
Ramp-up rate	3 °C/s max.
Ramp-down rate	3 °C/s to 6 °C/s

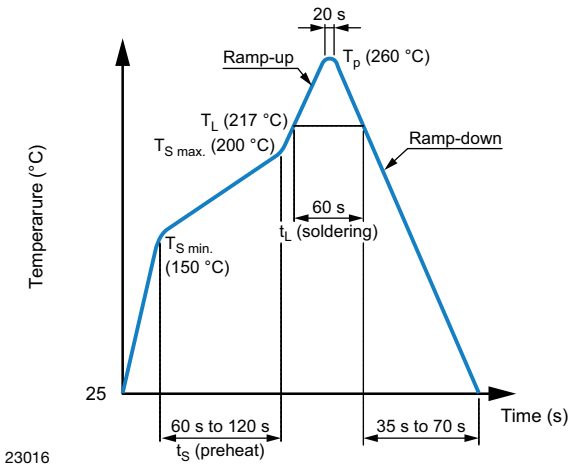

Fig. 18

For technical questions, contact: optocoupleranswers@vishay.com
THIS DOCUMENT IS SUBJECT TO CHANGE WITHOUT NOTICE. THE PRODUCTS DESCRIBED HEREIN AND THIS DOCUMENT ARE SUBJECT TO SPECIFIC DISCLAIMERS, SET FORTH AT www.vishay.com/doc?91000

Wave Soldering (JEDEC JESD22-A111 compliant)

One time soldering is recommended within the condition of temperature.

Temperature: 260 °C + 0 °C / - 5 °C

Time: 10 s

Preheat temperature: 25 °C to 140 °C

Preheat time: 30 s to 80 s

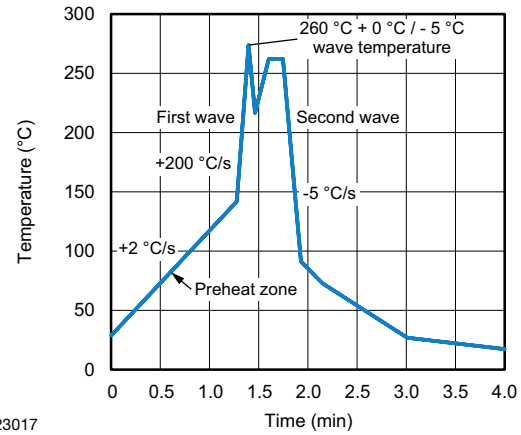

Fig. 19

Hand Soldering by Soldering Iron

Allow single lead soldering in every single process. One time soldering is recommended.

Temperature: 380 °C + 0 °C / - 5 °C

Time: 3 s max.

HANDLING AND STORAGE CONDITIONS

ESD level: HBM class 2

Floor life: unlimited

Conditions: T_{amb} < 30 °C, RH < 85 %

Moisture sensitivity level 1, according to J-STD-020

For technical questions, contact: optocoupleranswers@vishay.com
THIS DOCUMENT IS SUBJECT TO CHANGE WITHOUT NOTICE. THE PRODUCTS DESCRIBED HEREIN AND THIS DOCUMENT ARE SUBJECT TO SPECIFIC DISCLAIMERS, SET FORTH AT www.vishay.com/doc?91000

Disclaimer

ALL PRODUCT, PRODUCT SPECIFICATIONS AND DATA ARE SUBJECT TO CHANGE WITHOUT NOTICE TO IMPROVE RELIABILITY, FUNCTION OR DESIGN OR OTHERWISE.

Vishay Intertechnology, Inc., its affiliates, agents, and employees, and all persons acting on its or their behalf (collectively, “Vishay”), disclaim any and all liability for any errors, inaccuracies or incompleteness contained in any datasheet or in any other disclosure relating to any product.

Vishay makes no warranty, representation or guarantee regarding the suitability of the products for any particular purpose or the continuing production of any product. To the maximum extent permitted by applicable law, Vishay disclaims (i) any and all liability arising out of the application or use of any product, (ii) any and all liability, including without limitation special, consequential or incidental damages, and (iii) any and all implied warranties, including warranties of fitness for particular purpose, non-infringement and merchantability.

Statements regarding the suitability of products for certain types of applications are based on Vishay's knowledge of typical requirements that are often placed on Vishay products in generic applications. Such statements are not binding statements about the suitability of products for a particular application. It is the customer's responsibility to validate that a particular product with the properties described in the product specification is suitable for use in a particular application. Parameters provided in datasheets and / or specifications may vary in different applications and performance may vary over time. All operating parameters, including typical parameters, must be validated for each customer application by the customer's technical experts. Product specifications do not expand or otherwise modify Vishay's terms and conditions of purchase, including but not limited to the warranty expressed therein.

Hyperlinks included in this datasheet may direct users to third-party websites. These links are provided as a convenience and for informational purposes only. Inclusion of these hyperlinks does not constitute an endorsement or an approval by Vishay of any of the products, services or opinions of the corporation, organization or individual associated with the third-party website. Vishay disclaims any and all liability and bears no responsibility for the accuracy, legality or content of the third-party website or for that of subsequent links.

Except as expressly indicated in writing, Vishay products are not designed for use in medical, life-saving, or life-sustaining applications or for any other application in which the failure of the Vishay product could result in personal injury or death. Customers using or selling Vishay products not expressly indicated for use in such applications do so at their own risk. Please contact authorized Vishay personnel to obtain written terms and conditions regarding products designed for such applications.

No license, express or implied, by estoppel or otherwise, to any intellectual property rights is granted by this document or by any conduct of Vishay. Product names and markings noted herein may be trademarks of their respective owners.

© 2023 VISHAY INTERTECHNOLOGY, INC. ALL RIGHTS RESERVED