7 mm Diameter Miniature Single-Turn Cermet Trimmer

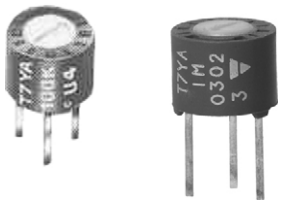

LINKS TO ADDITIONAL RESOURCES

3D Models

A dust sealed plastic case protecting a quality cermet track guarantees high performance and proven reliability. Adjustments are made easier by the clear scale readings. T7 is ideally suited to all industrial applications.

FEATURES

RoHS COMPLIANT

- Industrial grade
- 0.5 W at 70 °C
- Tests according to CECC 41100 or IEC 60393-1
- Low temperature coefficient (100 ppm/K typical)
- Wide resistance range (10 Ω to 2.2 MΩ)
- Easy to read scale
- 7 mm (0.275") diameter
- Material categorization: for definitions of compliance please see www.vishay.com/doc?99912

DIMENSIONS in millimeters (± 0.5 mm)

T7 YA

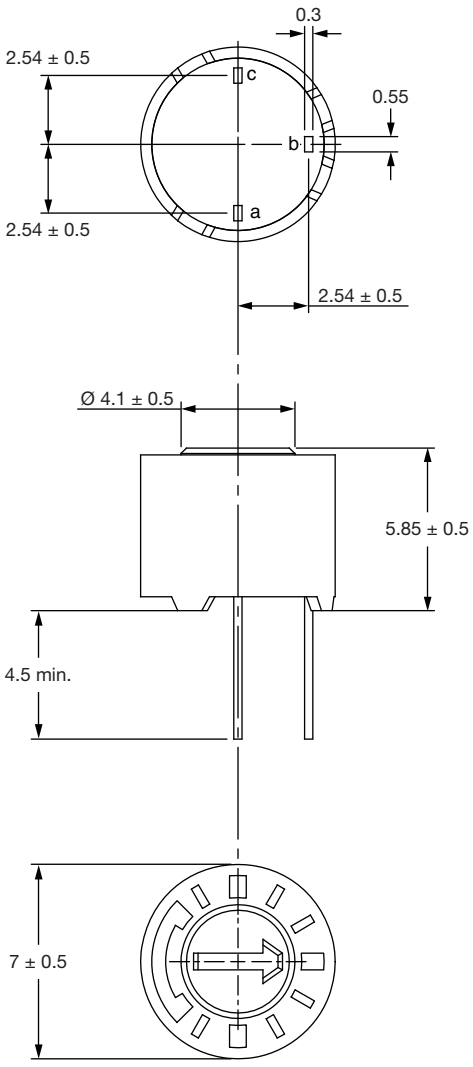

T7 YB

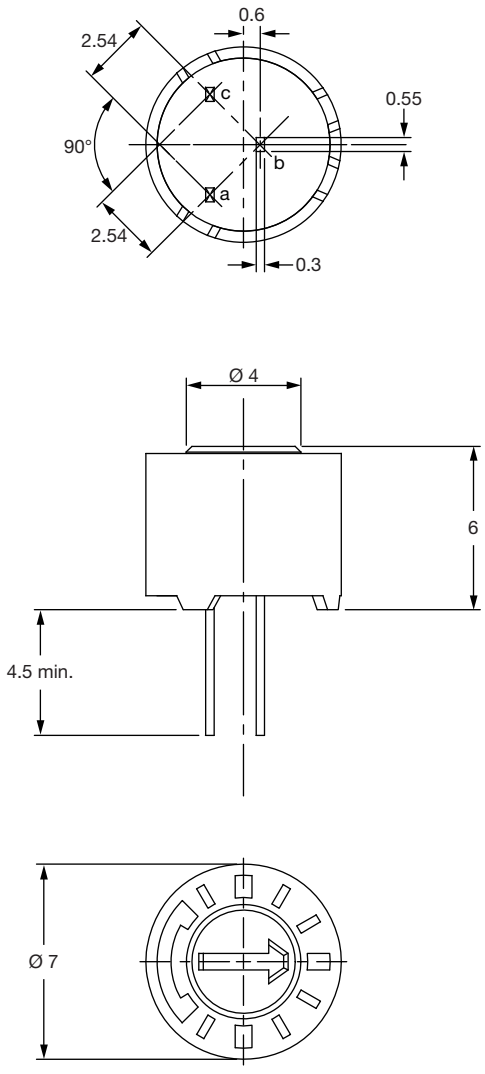

For technical questions, contact: sferpottrimmers@vishay.com

THIS DOCUMENT IS SUBJECT TO CHANGE WITHOUT NOTICE. THE PRODUCTS DESCRIBED HEREIN AND THIS DOCUMENT ARE SUBJECT TO SPECIFIC DISCLAIMERS, SET FORTH AT www.vishay.com/doc?91000

ELECTRICAL SPECIFICATIONS		
Resistive element		Cermet
Electrical travel		270° ± 15°
Resistance range		10 Ω to 2.2 MΩ
Standard series E3		1 - 2.2 - 4.7 and on request 1 - 2 - 5
Tolerance standard	standard	± 20 %
	on request	± 10 %
Power rating	linear	0.5 W at 70 °C 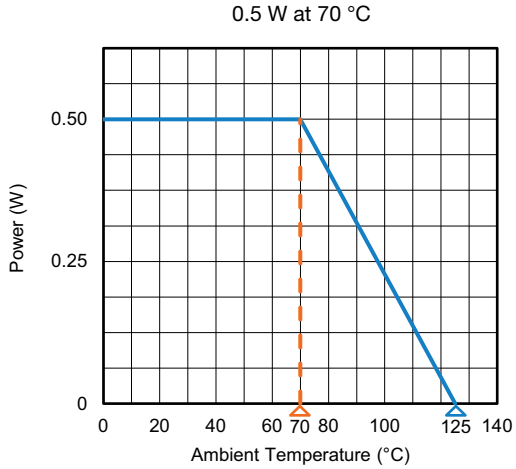
Circuit diagram		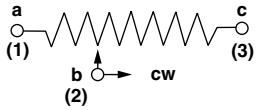
Temperature coefficient		See Standard Resistance Element Data
Limiting element voltage (linear law)		250 V
Contact resistance variation		3 % or 3 Ω
End resistance (typical)		1 Ω
Dielectric strength (RMS)		1000 V
Insulation resistance		10^6 MΩ

MECHANICAL SPECIFICATIONS	
Mechanical travel	300° ± 5°
Operating torque (max. Ncm)	1.5
End stop torque (max. Ncm)	3
Unit weight (max. g)	0.5
Terminals	SnAg alloy (code e2)

ENVIRONMENTAL SPECIFICATIONS	
Temperature range	-55 °C to +125 °C
Climatic category	55 / 100 / 56
Sealing	IP64 For board cleaning, Vishay recommends testing before usage. Water immersion is forbidden. Ultrasonic may cause component damage or failure.

For technical questions, contact: sferpottrimmers@vishay.com

THIS DOCUMENT IS SUBJECT TO CHANGE WITHOUT NOTICE. THE PRODUCTS DESCRIBED HEREIN AND THIS DOCUMENT ARE SUBJECT TO SPECIFIC DISCLAIMERS, SET FORTH AT www.vishay.com/doc?91000

PERFORMANCES

TESTS	CONDITIONS	TYPICAL VALUES AND DRIFTS	
		$\Delta R_T/R_T$ (%)	$\Delta R_{1-2}/R_{1-2}$ (%)
Load life	1000 h at rated power 90'/30' - ambient temperature 70 °C	± 3 % Contact resistance variation: < 3 % Rn	± 4 %
Climatic sequence	Phase A dry heat 100 °C Phase B damp heat Phase C cold -55 °C Phase D damp heat 5 cycles	± 2 %	± 3 %
Long term damp heat	56 days	± 2 % Dielectric strength: 1000 V_{RMS} Insulation resistance: > 10^4 MΩ	± 3 %
Rapid temperature change	5 cycles -55 °C at +125 °C	± 1 %	$\Delta V_{1-2}/\Delta V_{1-3}$ ≤ ± 2 %
Shock	50 *g* - 11 ms 3 successive shocks in 3 directions	± 0.5 %	± 1 %
Vibration	10 Hz to 55 Hz 0.75 mm or 10 g during 6 h	± 0.5 %	$\Delta V_{1-2}/\Delta V_{1-3}$ ≤ ± 1 %
Rotational life	200 cycles	± 3 % Contact resistance variation: < 3 % Rn	

Note
- Nothing stated herein shall be construed as a guarantee of quality or durability

STANDARD RESISTANCE ELEMENT DATA

STANDARD RESISTANCE VALUES	LINEAR LAW			TYPICAL TCR -55 °C to +125 °C
	MAX. POWER AT 70 °C	MAX. WORKING VOLTAGE	MAX. WIPER CURRENT	
Ω	W	V	mA	ppm/°C
10	0.5	2.2	224	
22	0.5	3.3	150	
47	0.5	4.8	103	
100	0.5	7.0	70	
220	0.5	10.5	47	
470	0.5	15.3	32	
1K	0.5	22.4	22	
2.2K	0.5	33.2	15	
4.7K	0.5	48.5	10	± 100
10K	0.5	70.7	7.0	
22K	0.5	105	4.8	
47K	0.5	153	3.2	
100K	0.5	224	2.2	
220K	0.28	250	1.1	
470K	0.13	250	1.53	
1M	0.06	250	0.25	
2.2M	0.028	250	0.11	

MARKING

- Vishay trademark
- Model
- YA or YB style
- Ohmic value (in Ω, kΩ, MΩ)
- Manufacturing date
- Marking of terminal: 3

For technical questions, contact: sferpottrimmers@vishay.com
THIS DOCUMENT IS SUBJECT TO CHANGE WITHOUT NOTICE. THE PRODUCTS DESCRIBED HEREIN AND THIS DOCUMENT ARE SUBJECT TO SPECIFIC DISCLAIMERS, SET FORTH AT www.vishay.com/doc?91000

PACKAGING

- In box of 200 pieces, code B40
- On request: In tube of 50 pieces, code T20 (TU50)

ORDERING INFORMATION (part number)

T	7	Y	A	4	7	4	M	B	4	0				

MODEL	STYLE	OHMIC VALUE	TOLERANCE	PACKAGING CODE	SPECIAL NUMBER
T7	**YA** **YB**	From 10 Ω to 2.2 MΩ **103** = 10K	**M** = 20 % On request: **K** = 10 %	**B40** = box 200 pieces On request: **T20** = tube 50 pieces	(If applicable) Given by Vishay for custom design

DESCRIPTION (for information only)

T7	YA	470K	20 %		BO	e2
MODEL	STYLE	VALUE	TOLERANCE	SPECIAL	PACKAGING	LEAD FINISH

RELATED DOCUMENTS

APPLICATION NOTES	
Potentiometers and Trimmers	www.vishay.com/doc?51001
Guidelines for Vishay Sfernice Resistive and Inductive Components	www.vishay.com/doc?52029

For technical questions, contact: sferpottrimmers@vishay.com

THIS DOCUMENT IS SUBJECT TO CHANGE WITHOUT NOTICE. THE PRODUCTS DESCRIBED HEREIN AND THIS DOCUMENT ARE SUBJECT TO SPECIFIC DISCLAIMERS, SET FORTH AT www.vishay.com/doc?91000

Disclaimer

ALL PRODUCT, PRODUCT SPECIFICATIONS AND DATA ARE SUBJECT TO CHANGE WITHOUT NOTICE TO IMPROVE RELIABILITY, FUNCTION OR DESIGN OR OTHERWISE.

Vishay Intertechnology, Inc., its affiliates, agents, and employees, and all persons acting on its or their behalf (collectively, “Vishay”), disclaim any and all liability for any errors, inaccuracies or incompleteness contained in any datasheet or in any other disclosure relating to any product.

Vishay makes no warranty, representation or guarantee regarding the suitability of the products for any particular purpose or the continuing production of any product. To the maximum extent permitted by applicable law, Vishay disclaims (i) any and all liability arising out of the application or use of any product, (ii) any and all liability, including without limitation special, consequential or incidental damages, and (iii) any and all implied warranties, including warranties of fitness for particular purpose, non-infringement and merchantability.

Statements regarding the suitability of products for certain types of applications are based on Vishay's knowledge of typical requirements that are often placed on Vishay products in generic applications. Such statements are not binding statements about the suitability of products for a particular application. It is the customer's responsibility to validate that a particular product with the properties described in the product specification is suitable for use in a particular application. Parameters provided in datasheets and / or specifications may vary in different applications and performance may vary over time. All operating parameters, including typical parameters, must be validated for each customer application by the customer's technical experts. Product specifications do not expand or otherwise modify Vishay's terms and conditions of purchase, including but not limited to the warranty expressed therein.

Hyperlinks included in this datasheet may direct users to third-party websites. These links are provided as a convenience and for informational purposes only. Inclusion of these hyperlinks does not constitute an endorsement or an approval by Vishay of any of the products, services or opinions of the corporation, organization or individual associated with the third-party website. Vishay disclaims any and all liability and bears no responsibility for the accuracy, legality or content of the third-party website or for that of subsequent links.

Except as expressly indicated in writing, Vishay products are not designed for use in medical, life-saving, or life-sustaining applications or for any other application in which the failure of the Vishay product could result in personal injury or death. Customers using or selling Vishay products not expressly indicated for use in such applications do so at their own risk. Please contact authorized Vishay personnel to obtain written terms and conditions regarding products designed for such applications.

No license, express or implied, by estoppel or otherwise, to any intellectual property rights is granted by this document or by any conduct of Vishay. Product names and markings noted herein may be trademarks of their respective owners.

© 2024 VISHAY INTERTECHNOLOGY, INC. ALL RIGHTS RESERVED