Cermet Trimmers, Surface Mount, 4.0 mm Square, Single Turn, Industrial Grade



FEATURES

- 0.25 W at 70 °C
- Fully sealed to withstand board washing
- Compatible with popular vacuum pick-and-place equipment
- J-hook and gull-wing configurations
- Material categorization: for definitions of compliance please see www.vishay.com/doc?99912

RoHS COMPLIANT

DESIGN SUPPORT TOOLS

click logo to get started

3D Models Available

DIMENSIONS in millimeters (inches) ± 0.25 mm (± 0.010")

TS4YJ

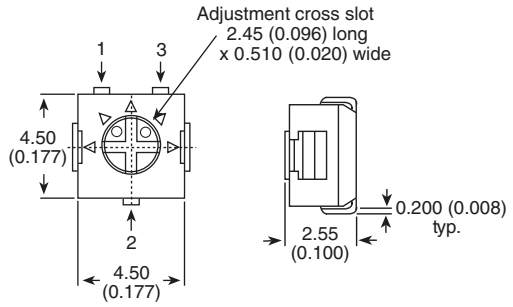

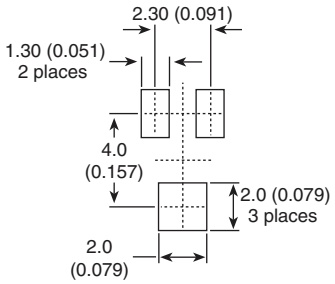

Recommended PCB footprint

TS4YL

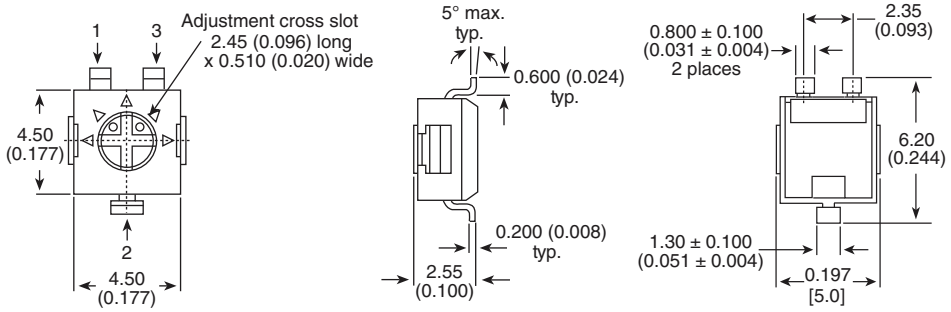

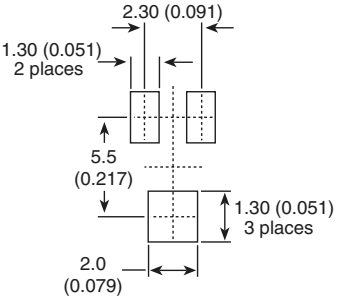

Recommended PCB footprint

ELECTRICAL SPECIFICATIONS

Resistance range	10 Ω to 2 MΩ (see Standard Resistance table)
Tolerance	± 20 % standard
End resistance	1 % or 2 Ω maximum, whichever is greater
Temperature coefficient	± 100 ppm/°C
Power rating	0.25 W at +70 °C (300 V maximum), 0 W at +125 °C
Circuit diagram	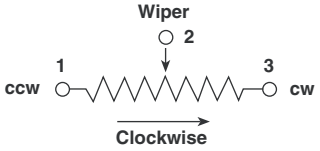
Contact resistance variation (CRV)	1 % or 3 Ω
Resolution	Infinite
Insulation resistance (500 V_{DC})	100 MΩ minimum
Dielectric strength (RMS)	Sea level 500 V_{AC} (1 minute)
Adjustment angle	210° nominal

For technical questions, contact: sferpottrimmers@vishay.com

THIS DOCUMENT IS SUBJECT TO CHANGE WITHOUT NOTICE. THE PRODUCTS DESCRIBED HEREIN AND THIS DOCUMENT ARE SUBJECT TO SPECIFIC DISCLAIMERS, SET FORTH AT www.vishay.com/doc?91000

MECHANICAL SPECIFICATIONS	
Mechanical angle	240° nominal
Operating torque (typical)	1.8 Ncm
End stop torque (typical)	3.0 Ncm
Weight	Approximately 0.01 oz.
Wiper	Positioned at approx. 50 %

ENVIRONMENTAL SPECIFICATIONS	
Temperature range	-55 °C to +125 °C
MSL level	1

PERFORMANCES

TESTS	CONDITIONS	TYPICAL VALUES AND DRIFTS		
		$\Delta R_T/R_T$ (%)	$\Delta V_{1\text{-}2}/V_{1\text{-}3}$ (%)	OTHER
Vibration	20 *g*'s	± 1 %	± 1 %	-
Shock	100 *g*'s	± 1 %	± 1 %	-
Electrical endurance	At 70 °C rated power 1000 h	± 3 %	-	-
Mechanical endurance	100 cycles	± 3 %	-	-
Change of temperature	5 cycles	± 2 %	± 1 %	-
Humidity	90 % to 98 % relative humidity 10 cycles, 240 h	± 2 %	-	Insulation resistance:10 MΩ

Note

- Nothing stated herein shall be construed as a guarantee of quality or durability

SOLDERING RECOMMENDATIONS

Recommended reflow profile 2, see Application Note www.vishay.com/doc?52029

TWO DIGIT DATE CODE

YEAR					
1990	A	2000	M	2010	A
1991	B	2001	N	2011	B
1992	C	2002	P	2012	C
1993	D	2003	R	2013	D
1994	E	2004	S	2014	E
1995	F	2005	T	2015	F
1996	H	2006	U	2016	H
1997	J	2007	V	2017	J
1998	K	2008	W	2018	K
1999	L	2009	X	2019	L

MONTH			
January	1	July	7
February	2	August	8
March	3	September	9
April	4	October	O
May	5	November	N
June	6	December	D

STANDARD RESISTANCE ELEMENT DATA

RESISTANCE Ω	RESISTANCE CODE	TYPICAL TCR (ppm/°C)
10	100	
20	200	
50	500	
100	101	
200	201	
500	501	
1K	102	
2K	202	
5K	502	± 100
10K	103	
20K	203	
50K	503	
100K	104	
200K	204	
500K	504	
1M	105	
2M	205	

Note

- Special resistance available

For technical questions, contact: sferpottrimmers@vishay.com

THIS DOCUMENT IS SUBJECT TO CHANGE WITHOUT NOTICE. THE PRODUCTS DESCRIBED HEREIN AND THIS DOCUMENT ARE SUBJECT TO SPECIFIC DISCLAIMERS, SET FORTH AT www.vishay.com/doc?91000

PART MARKING

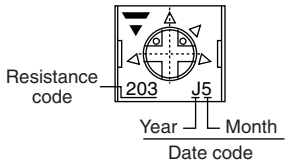

- Manufacturers code
- Resistance code
- Date code

PACKAGING in millimeters (inches)

TS4YJ, TS4YL
Tape

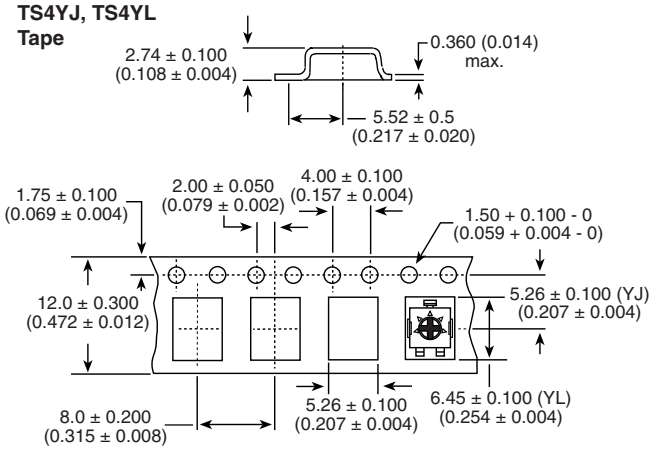

TS4YJ, TS4YL
Reel

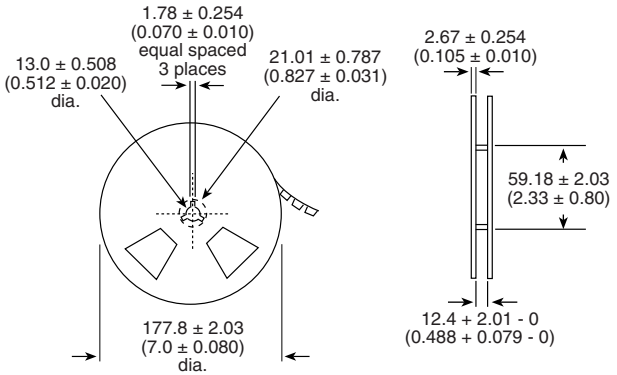

500 pieces per 7" reel standard. Meets EIA Specifications 481.

ORDERING INFORMATION (part number)

T	S	4	Y	L	5	0	2	M	R	1	0				

MODEL	STYLE	OHMIC VALUE	TOLERANCE	PACKAGING	SPECIAL NUMBER
TS4	**YJ** **YL**	From 10 Ω to 2 MΩ 502 = 5 kΩ	**M** = ± 20 %	**R10** = reel 500 pieces	(If applicable) Given by Vishay for custom design

DESCRIPTION (for information only)

TS4	YL	5K	20 %		TR	e3
MODEL	STYLE	VALUE	TOLERANCE	SPECIAL	PACKAGING	LEAD FINISH

RELATED DOCUMENTS

APPLICATION NOTES	
Potentiometers and Trimmers	www.vishay.com/doc?51001
Guidelines for Vishay Sfernice Resistive and Inductive Components	www.vishay.com/doc?52029

For technical questions, contact: sferpottrimmers@vishay.com

THIS DOCUMENT IS SUBJECT TO CHANGE WITHOUT NOTICE. THE PRODUCTS DESCRIBED HEREIN AND THIS DOCUMENT ARE SUBJECT TO SPECIFIC DISCLAIMERS, SET FORTH AT www.vishay.com/doc?91000

Disclaimer

ALL PRODUCT, PRODUCT SPECIFICATIONS AND DATA ARE SUBJECT TO CHANGE WITHOUT NOTICE TO IMPROVE RELIABILITY, FUNCTION OR DESIGN OR OTHERWISE.

Vishay Intertechnology, Inc., its affiliates, agents, and employees, and all persons acting on its or their behalf (collectively, “Vishay”), disclaim any and all liability for any errors, inaccuracies or incompleteness contained in any datasheet or in any other disclosure relating to any product.

Vishay makes no warranty, representation or guarantee regarding the suitability of the products for any particular purpose or the continuing production of any product. To the maximum extent permitted by applicable law, Vishay disclaims (i) any and all liability arising out of the application or use of any product, (ii) any and all liability, including without limitation special, consequential or incidental damages, and (iii) any and all implied warranties, including warranties of fitness for particular purpose, non-infringement and merchantability.

Statements regarding the suitability of products for certain types of applications are based on Vishay's knowledge of typical requirements that are often placed on Vishay products in generic applications. Such statements are not binding statements about the suitability of products for a particular application. It is the customer's responsibility to validate that a particular product with the properties described in the product specification is suitable for use in a particular application. Parameters provided in datasheets and / or specifications may vary in different applications and performance may vary over time. All operating parameters, including typical parameters, must be validated for each customer application by the customer's technical experts. Product specifications do not expand or otherwise modify Vishay's terms and conditions of purchase, including but not limited to the warranty expressed therein.

Hyperlinks included in this datasheet may direct users to third-party websites. These links are provided as a convenience and for informational purposes only. Inclusion of these hyperlinks does not constitute an endorsement or an approval by Vishay of any of the products, services or opinions of the corporation, organization or individual associated with the third-party website. Vishay disclaims any and all liability and bears no responsibility for the accuracy, legality or content of the third-party website or for that of subsequent links.

Except as expressly indicated in writing, Vishay products are not designed for use in medical, life-saving, or life-sustaining applications or for any other application in which the failure of the Vishay product could result in personal injury or death. Customers using or selling Vishay products not expressly indicated for use in such applications do so at their own risk. Please contact authorized Vishay personnel to obtain written terms and conditions regarding products designed for such applications.

No license, express or implied, by estoppel or otherwise, to any intellectual property rights is granted by this document or by any conduct of Vishay. Product names and markings noted herein may be trademarks of their respective owners.

© 2024 VISHAY INTERTECHNOLOGY, INC. ALL RIGHTS RESERVED