TEXAS INSTRUMENTS
www.ti.com

Ultra-Low Supply-Current/Supply-Voltage Supervisory Circuits

FEATURES

- **Controlled Baseline**
  - **One Assembly Site**
  - **One Test Site**
  - **One Fabrication Site**
- **Extended Temperature Performance of –55°C to 125°C**
- **Enhanced Diminishing Manufacturing Sources (DMS) Support**
- **Enhanced Product-Change Notification**
- **Qualification Pedigree** (1)
- **Precision Supply Voltage Supervision Range: 0.9 V, 1.2 V, 1.5 V, 1.6 V, 2 V, and 3.3 V**
- **High Trip-Point Accuracy: 0.75%**
- **Supply Current of 1.2 μA (Typ)**
- **$\overline{\text{RESET}}$ Defined With Input Voltages as Low as 0.4 V**
- **Power-On Reset Generator With a Delay Time of 130 ms**
- **Push/Pull or Open-Drain $\overline{\text{RESET}}$ Outputs**
- **SOT23-6 Package**

(1) Component qualification in accordance with JEDEC and industry standards to ensure reliable operation over an extended temperature range. This includes, but is not limited to, Highly Accelerated Stress Test (HAST) or biased 85/85, temperature cycle, autoclave or unbiased HAST, electromigration, bond intermetallic life, and mold compound life. Such qualification testing should not be viewed as justifying use of this component beyond specified performance and environmental limits.

APPLICATIONS

- **Applications Using Low-Power DSPs, Microcontrollers, or Microprocessors**
- **Portable- and Battery-Powered Equipment**
- **Intelligent Instruments**
- **Wireless Communication Systems**
- **Industrial Equipment**
- **Notebook/Desktop Computers**

DESCRIPTION

The TPS310x and TPS311x families of supervisory circuits provide circuit initialization and timing supervision, primarily for DSP and processor-based systems.

During power-on, $\overline{\text{RESET}}$ is asserted when the supply voltage (V_{DD}) becomes higher than 0.4 V. Thereafter, the supervisory circuit monitors V_{DD} and keeps the $\overline{\text{RESET}}$ output active as long as V_{DD} remains below the threshold voltage (V_{IT}). An internal timer delays the return of the output to the inactive state to ensure proper system reset. The delay time starts after V_{DD} has risen above V_{IT}. When V_{DD} drops below V_{IT}, the output becomes active again.

All the devices of this family have a fixed-sense threshold voltage (V_{IT}) set by an internal voltage divider.

The TPS3103 and TPS3106 have an active-low, open-drain $\overline{\text{RESET}}$ output. The TPS3110 has an active-low push/pull $\overline{\text{RESET}}$.

The product spectrum is designed for supply voltages of 0.9 V up to 3.3 V. The circuits are available in SOT23-6 packages. The TPS31xx family is characterized for operation over a temperature range of –55°C to 125°C.

Please be aware that an important notice concerning availability, standard warranty, and use in critical applications of Texas Instruments semiconductor products and disclaimers thereto appears at the end of this data sheet.

PRODUCTION DATA information is current as of publication date. Products conform to specifications per the terms of the Texas Instruments standard warranty. Production processing does not necessarily include testing of all parameters.

Copyright © 2006, Texas Instruments Incorporated

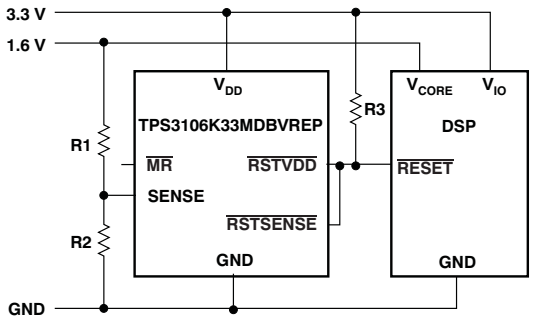

Typical Application Circuit

This integrated circuit can be damaged by ESD. Texas Instruments recommends that all integrated circuits be handled with appropriate precautions. Failure to observe proper handling and installation procedures can cause damage.

ESD damage can range from subtle performance degradation to complete device failure. Precision integrated circuits may be more susceptible to damage because very small parametric changes could cause the device not to meet its published specifications.

PIN DESCRIPTIONS

TPS3103
DBV PACKAGE
(TOP VIEW)

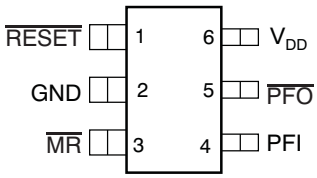

TPS3106
DBV PACKAGE
(TOP VIEW)

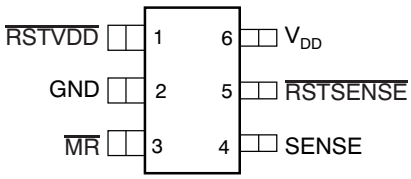

TPS3110
DBV PACKAGE
(TOP VIEW)

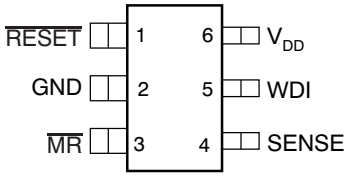

TERMINAL FUNCTIONS

TERMINAL			DESCRIPTION
NAME	DEVICE	NO.	
GND	All	2	Ground
$\overline{MR}$	All	3	Manual reset input. Pull low to force a reset. $\overline{RESET}$ remains low as long as $\overline{MR}$ is low and for the timeout period after $\overline{MR}$ goes high. Leave unconnected or connect to V_{DD} when unused.
PFI	TPS3103	4	Power-fail input. Compares to 0.551 V with no additional delay. Connect to V_{DD} if not used.
$\overline{PFO}$	TPS3103	5	Power-fail output. Goes high when voltage at PFI rises above 0.551 V.
$\overline{RESET}$	TPS3103, TPS3110	1	Active-low reset output. Either push-pull or open-drain output stage.
$\overline{RSTSENSE}$	TPS3106	5	Active-low reset output. Logic level at $\overline{RSTSENSE}$ only depends on the voltage at SENSE and the status of $\overline{MR}$.
$\overline{RSTVDD}$	TPS3106	1	Active-low reset output. Logic level at $\overline{RSTVDD}$ only depends on the voltage at V_{DD} and the status of $\overline{MR}$.
SENSE	TPS3106, TPS3110	4	Sense. A reset is asserted if the voltage at SENSE is lower than 0.551 V. Connect to V_{DD} if unused.
V_{DD}	All	6	Supply voltage. Powers the device and monitors its own voltage.
WDI	TPS3110	5	Watchdog timer input. If WDI remains high or low longer than the time-out period, reset is triggered. The timer clears when reset is asserted or when WDI sees a rising edge or a falling edge.

ORDERING INFORMATION(1)

ORDERABLE PART NUMBER	NOMINAL SUPPLY VOLTAGE	THRESHOLD VOLTAGE, V_{IT}(2)	SYMBOL
TPS3103E12MDBVREP(3)	1.2 V	1.142 V	TBD
TPS3103E15MDBVREP(3)	1.5 V	1.434 V	TBD
TPS3103H20MDBVREP(3)	2 V	1.84 V	TBD
TPS3103K33MDBVREP(3)	3.3 V	2.941 V	TBD
TPS3106E09MDBVREP(3)	0.9 V	0.86 V	TBD
TPS3106E16MDBVREP(3)	1.6 V	1.521 V	TBD
TPS3106K33MDBVREP	3.3 V	2.941 V	AAVM
TPS3110E09MDBVREP(3)	0.9 V	0.86 V	TBD
TPS3110E12MDBVREP(3)	1.2 V	1.142 V	TBD
TPS3110E15MDBVREP(3)	1.5 V	1.434 V	TBD
TPS3110K33MDBVREP(3)	3.3 V	2.941 V	TBD

(1) For the most current package and ordering information, see the Package Option Addendum at the end of this document, or see the TI web site at www.ti.com.
(2) Custom threshold voltages are available. Minimum order quantities apply. Contact TI for details and availability.
(3) Product Preview

AVAILABLE OPTIONS

DEVICE	$\overline{\text{RESET}}$ OUTPUT	$\overline{\text{RSTSENSE}}$, $\overline{\text{RSTVDD}}$ OUTPUT	SENSE INPUT	WDI INPUT	$\overline{\text{PFO}}$ OUTPUT
TPS3103	Open drain				Open drain
TPS3106		Open drain	ü		
TPS3110	Push-pull		ü	ü	

ABSOLUTE MAXIMUM RATINGS(1)

over operating free-air temperature range (unless otherwise noted)

	VALUE	UNIT
Supply voltage range, V_{DD}(2)	–0.3 to 3.6	V
All other pins(2)	–0.3 to 3.6	V
Maximum low output current, I_{OL}	5	mA
Maximum high output current, I_{OH}	–5	mA
Input clamp current, I_{IK} ($V_I < 0$ or $V_I > V_{DD}$)	±10	mA
Output clamp current, I_{OK} ($V_O < 0$ or $V_O > V_{DD}$)	±10	mA
Operating temperature range, T_A	–55 to 125	°C
Storage temperature range, T_{stg}	–65 to 150	°C
Soldering temperature	260	°C

(1) Stresses beyond those listed under *absolute maximum ratings* may cause permanent damage to the device. These are stress ratings only, and functional operation of the device at these or any other conditions beyond those indicated under *recommended operating conditions* is not implied. Exposure to absolute-maximum-rated conditions for extended periods may affect device reliability.
(2) All voltage values are with respect to GND. For reliable operation, the device must not be operated at 3.6 V for more than t = 1000h continuously

RECOMMENDED OPERATING CONDITIONS

over operating free-air temperature range (unless otherwise noted)

	MIN	MAX	UNIT
Supply voltage, V_{DD}(1)	0.4	3.3	V
Input voltage, V_I	0	V_{DD} + 0.3	V
High-level input voltage, V_{IH} at $\overline{\text{MR}}$, WDI	$0.7 \times V_{DD}$		V
Low-level input voltage, V_{IL} at $\overline{\text{MR}}$, WDI		$0.3 \times V_{DD}$	V
Input transition rise and fall rate at $\Delta t/\Delta V$ at $\overline{\text{MR}}$, WDI		100	ns/V
Operating temperature, T_A	–55	125	°C

(1) For proper operation of SENSE, PFI, and WDI functions: $V_{DD} \geq 0.8$ V.

ELECTRICAL CHARACTERISTICS

over operating free-air temperature range (unless otherwise noted)

PARAMETER			TEST CONDITIONS	MIN	TYP	MAX	UNIT
V_{OH}	High-level output voltage		V_{DD} = 3.3 V, I_{OH} = –3 mA	$0.8 \times V_{DD}$			V
			V_{DD} = 1.8 V, I_{OH} = –2 mA				
			V_{DD} = 1.5 V, I_{OH} = –1 mA				
			V_{DD} = 0.9 V, I_{OH} = –0.4 mA				
			V_{DD} = 0.5 V, I_{OH} = –5 µA	$0.7 \times V_{DD}$			V
V_{OL}	Low-level output voltage		V_{DD} = 3.3 V, I_{OL} = 3 mA			0.3	V
			V_{DD} = 1.5 V, I_{OL} = 2 mA				
			V_{DD} = 1.2 V, I_{OL} = 1 mA				
			V_{DD} = 0.9 V, I_{OL} = 500 µA				
V_{OL}	Low-level output voltage	$\overline{\text{RESET}}$ only	V_{DD} = 0.4 V, I_{OL} = 5 µA			0.1	V

ELECTRICAL CHARACTERISTICS (continued)

over operating free-air temperature range (unless otherwise noted)

PARAMETER			TEST CONDITIONS	MIN	TYP	MAX	UNIT
V_{IT-}	Negative-going input threshold voltage(1)	TPS31xxE09	T_A = 25°C	0.854	0.86	0.866	V
		TPS31xxE12		1.133	1.142	1.151	
		TPS31xxE15		1.423	1.434	1.445	
		TPS31xxE16		1.512	1.523	1.534	
		TPS31xxH20		1.829	1.843	1.857	
		TPS31xxK33	T_A = 25°C	2.905	2.941	2.970	
			T_A = Full Range	2.867		3.005	
$V_{IT-(S)}$	Negative-going input threshold voltage(2)	SENSE, PFI	$V_{DD} \geq 0.8$ V, T_A = 25°C	0.540	0.551	0.569	V
			$V_{DD} \geq 0.8$ V, T_A = Full Range	0.530	0.551	0.575	
V_{HYS}	Hysteresis at V_{DD} input		0.8 V ≤ V_{IT} < 1.5 V		20		mV
			1.6 V ≤ V_{IT} < 2.4 V		30		
			2.5 V ≤ V_{IT} < 3.3 V		60		
$T_{(K)}$	Temperature coefficient of V_{IT-}, PFI, SENSE		T_A = –55°C to 125°C		–0.012	–0.019	%/K
V_{HYS}	Hysteresis at SENSE, PFI input		$V_{DD} \geq 0.8$ V		15		mV
I_{IH}	High-level input current	$\overline{MR}$	$\overline{MR}$ = V_{DD}, V_{DD} = 3.3 V	–30		25	nA
		SENSE, PFI, WDI	SENSE, PFI, WDI = V_{DD}, V_{DD} = 3.3 V	–25		25	
I_{IL}	Low-level input current	$\overline{MR}$	$\overline{MR}$ = 0 V, V_{DD} = 3.3 V	–47	–33	–25	µA
		SENSE, PFI, WDI	SENSE, PFI, WDI = 0 V, V_{DD} = 3.3 V	–25		25	nA
I_{OH}	High-level output current at $\overline{RESET}$(3)	Open drain	V_{DD} = V_{IT} + 0.2 V, V_{OH} = 3.3 V			200	nA
I_{DD}	Supply current		V_{DD} > V_{IT} (average current), V_{DD} < 1.8 V		1.2	3	µA
			V_{DD} > V_{IT} (average current), V_{DD} > 1.8 V		2	4.5	
			V_{DD} < V_{IT}, V_{DD} < 1.8 V			29	
			V_{DD} < V_{IT}, V_{DD} > 1.8 V			32	
	Internal pullup resistor at $\overline{MR}$			70	100	130	kΩ
C_I	Input capacitance at $\overline{MR}$, SENSE, PFI, WDI		V_I = 0 V to V_{DD}		1		pF

(1) To ensure the best stability of the threshold voltage, a bypass capacitor (ceramic, 0.1 µF) should be placed close to the supply terminals.
(2) To ensure the best stability of the threshold voltage, a bypass capacitor (ceramic, 0.1 µF) should be placed close to the supply terminals.
(3) Also refers to $\overline{RSTVDD}$ and $\overline{RSTSENSE}$.

SWITCHING CHARACTERISTICS

R_L = 1 MΩ, C_L = 50 pF, and T_A = –55°C to 125°C (unless otherwise noted)

PARAMETER			TEST CONDITIONS	MIN	TYP	MAX	UNIT
t_d	Delay time		$V_{DD} \geq 1.1 \times V_{IT}$, $\overline{MR}$ = 0.7 × V_{DD}, See Timing Diagrams	65	130	195	ms
t_{PHL}	Propagation delay time, high-to-low-level output	V_{DD} to $\overline{RESET}$ or $\overline{RSTVDD}$ delay	V_{IH} = 1.1 × V_{IT}, V_{IL} = 0.9 × V_{IT}			40	µs
t_{PHL}	Propagation delay time, high-to-low-level output	SENSE to $\overline{RESET}$ or $\overline{RSTSENSE}$ delay	$V_{DD} \geq 0.8$ V, V_{IH} = 1.1 × V_{IT}, V_{IL} = 0.9 × V_{IT}			40	µs
t_{PHL}	Propagation delay time, high-to-low-level output	PFI to $\overline{PFO}$ delay	$V_{DD} \geq 0.8$ V, V_{IH} = 1.1 × V_{IT}, V_{IL} = 0.9 × V_{IT}			40	µs
t_{PLH}	Propagation delay time, low-to-high-level output	PFI to $\overline{PFO}$ delay	$V_{DD} \geq 0.8$ V, V_{IH} = 1.1 × V_{IT}, V_{IL} = 0.9 × V_{IT}			300	µs

SWITCHING CHARACTERISTICS (continued)

R_L = 1 MΩ, C_L = 50 pF, and T_A = –55°C to 125°C (unless otherwise noted)

PARAMETER			TEST CONDITIONS	MIN	TYP	MAX	UNIT
t_{PHL}	Propagation delay time, high_to_low-level output	$\overline{MR}$ to $\overline{RESET}$, $\overline{RSTVDD}$, $\overline{RSTSENSE}$ delay	$V_{DD} \geq 1.1 \times V_{IT}$, $V_{IL} = 0.3 \times V_{DD}$, $V_{IH} = 0.7 \times V_{DD}$		1	5	µs

TIMING REQUIREMENTS

R_L = 1 MΩ, C_L = 50 pF, and T_A = –55°C to 125°C (unless otherwise noted)

PARAMETER			TEST CONDITIONS	MIN	TYP	MAX	UNIT
$t_{T(OUT)}$	Time-out period	at WDI	$V_{DD} \geq 0.85$ V	0.55	1.1	1.65	s
t_W	Pulse width	at V_{DD}	$V_{IH} = 1.1 \times V_{IT}$, $V_{IL} = 0.9 \times V_{IT–}$, $V_{IT–} = 0.86$ V	20			µs
		at $\overline{MR}$	$V_{DD} \geq V_{IT} + 0.2$ V, $V_{IL} = 0.3 \times V_{DD}$, $V_{IH} = 0.7 \times V_{DD}$	0.1			
		at SENSE	$V_{DD} \geq V_{IT}$, $V_{IH} = 1.1 \times V_{IT – (S)}$, $V_{IL} = 0.9 \times V_{IT – (S)}$	20			
		at PFI	$V_{DD} \geq 0.85$ V, $V_{IH} = 1.1 \times V_{IT – (S)}$, $V_{IL} = 0.9 \times V_{IT – (S)}$	20			
		at WDI	$V_{DD} \geq V_{IT}$, $V_{IL} = 0.3 \times V_{DD}$, $V_{IH} = 0.7 \times V_{DD}$	0.3			

FUNCTIONAL BLOCK DIAGRAMS

TPS3103

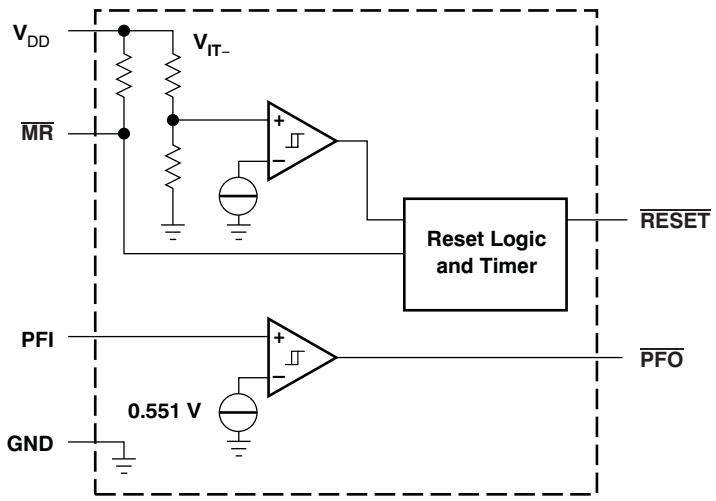

FUNCTIONAL BLOCK DIAGRAMS (continued)

TPS3106

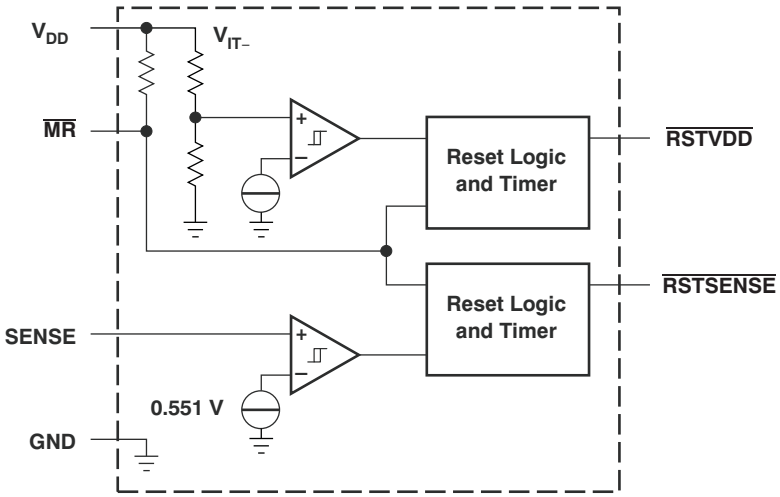

TPS3110

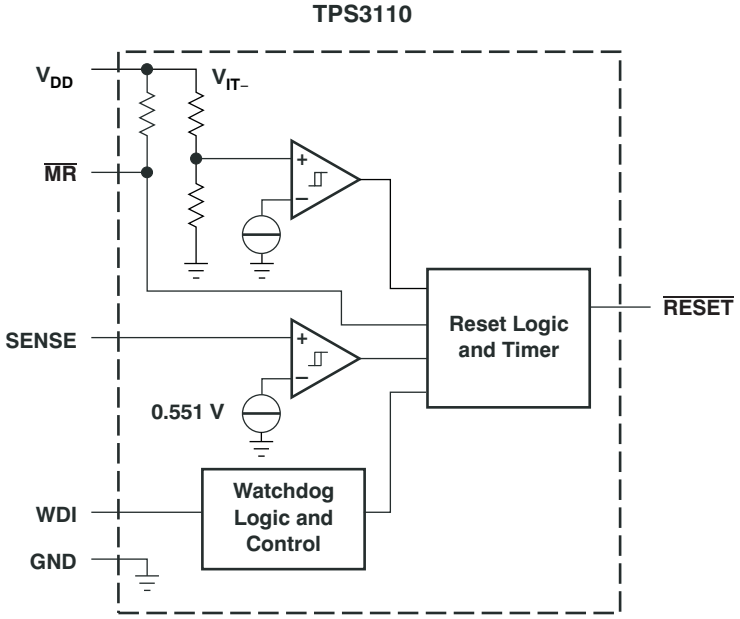

Table 1. TPS3103 FUNCTION TABLE

$\overline{MR}$	$V_{(PFI)}$ > 0.551 V	V_{DD} > V_{IT}	$\overline{RESET}$	$\overline{PFO}$
L	0	X(1)	L	L
L	1	X	L	H
H	0	0	L	L
H	0	1	H	L
H	1	0	L	H
H	1	1	H	H

(1) X = Don't care

Table 2. TPS3106 FUNCTION TABLE

$\overline{MR}$	$V_{(SENSE)}$ > 0.551 V	$V_{DD} > V_{IT}$	$\overline{RSTVDD}$	$\overline{RSTSENSE}$
L	X(1)	X	L	L
H	0	0	L	L
H	0	1	H	L
H	1	0	L	H
H	1	1	H	H

(1) X = Don't care

Table 3. TPS3110 FUNCTION TABLE(1)

$\overline{MR}$	$V_{(SENSE)}$ > 0.551 V	$V_{DD} > V_{IT}$	$\overline{RESET}$
L	X(2)	X	L
H	0	0	L
H	0	1	L
H	1	0	L
H	1	1	H

(1) Function of watchdog timer not shown
(2) X = Don't care

TIMING DIAGRAMS

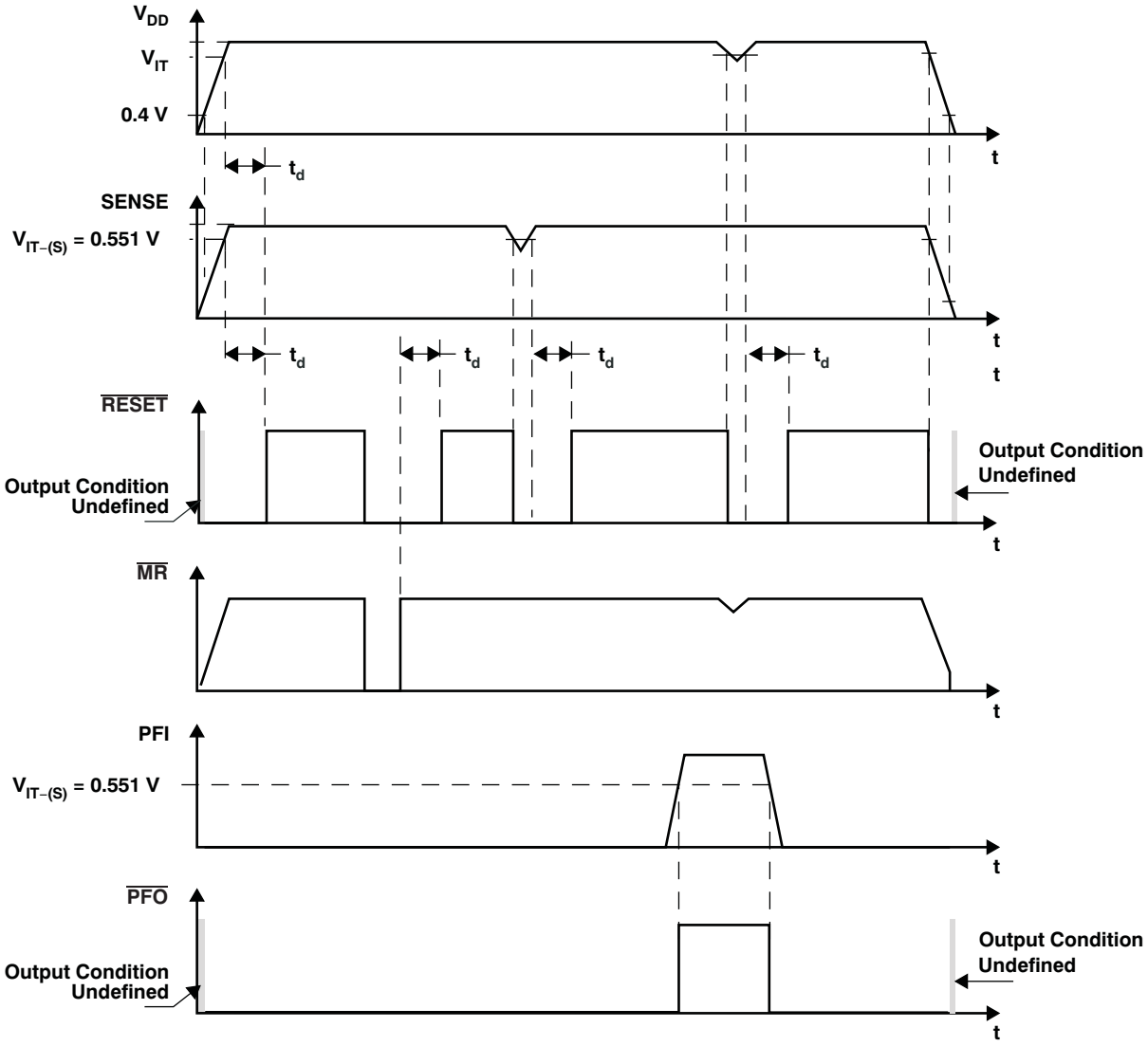

Figure 1. TPS3103 Timing

TIMING DIAGRAMS (continued)

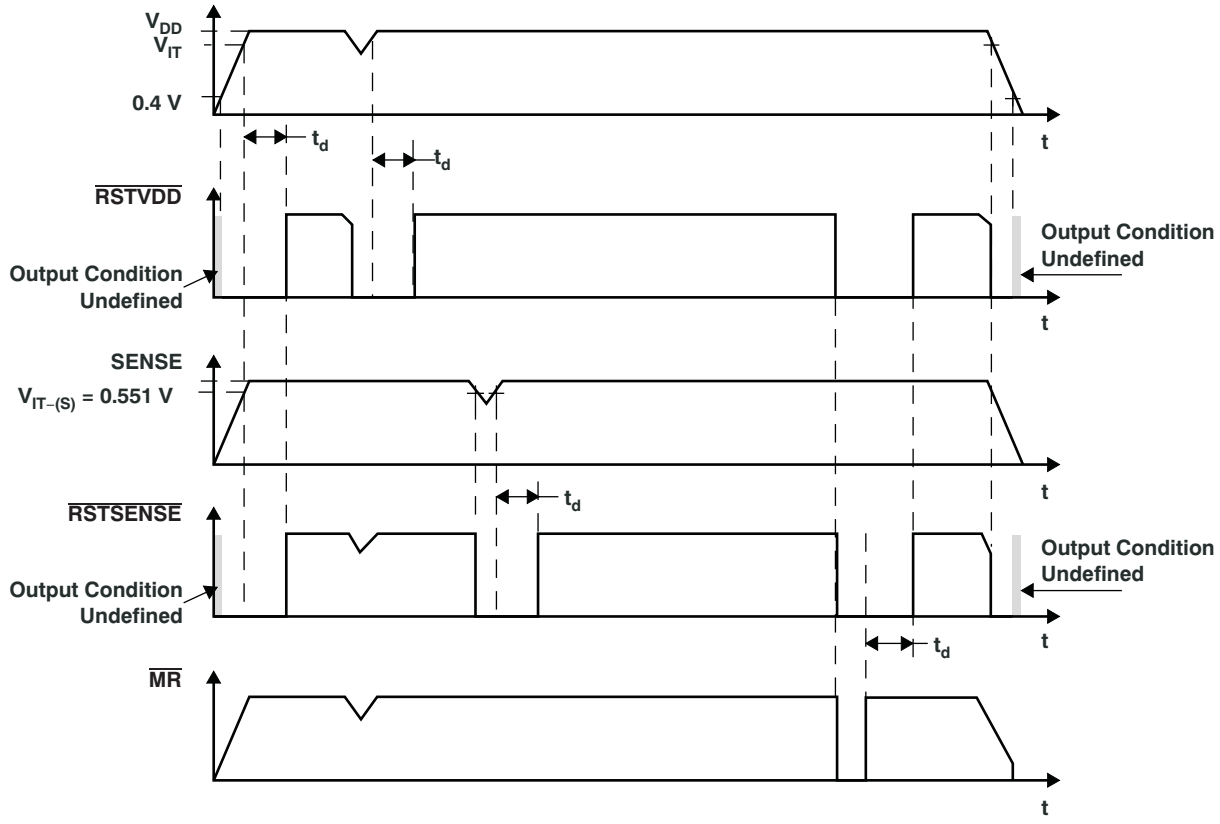

Figure 2. TPS3106 Timing

TIMING DIAGRAMS (continued)

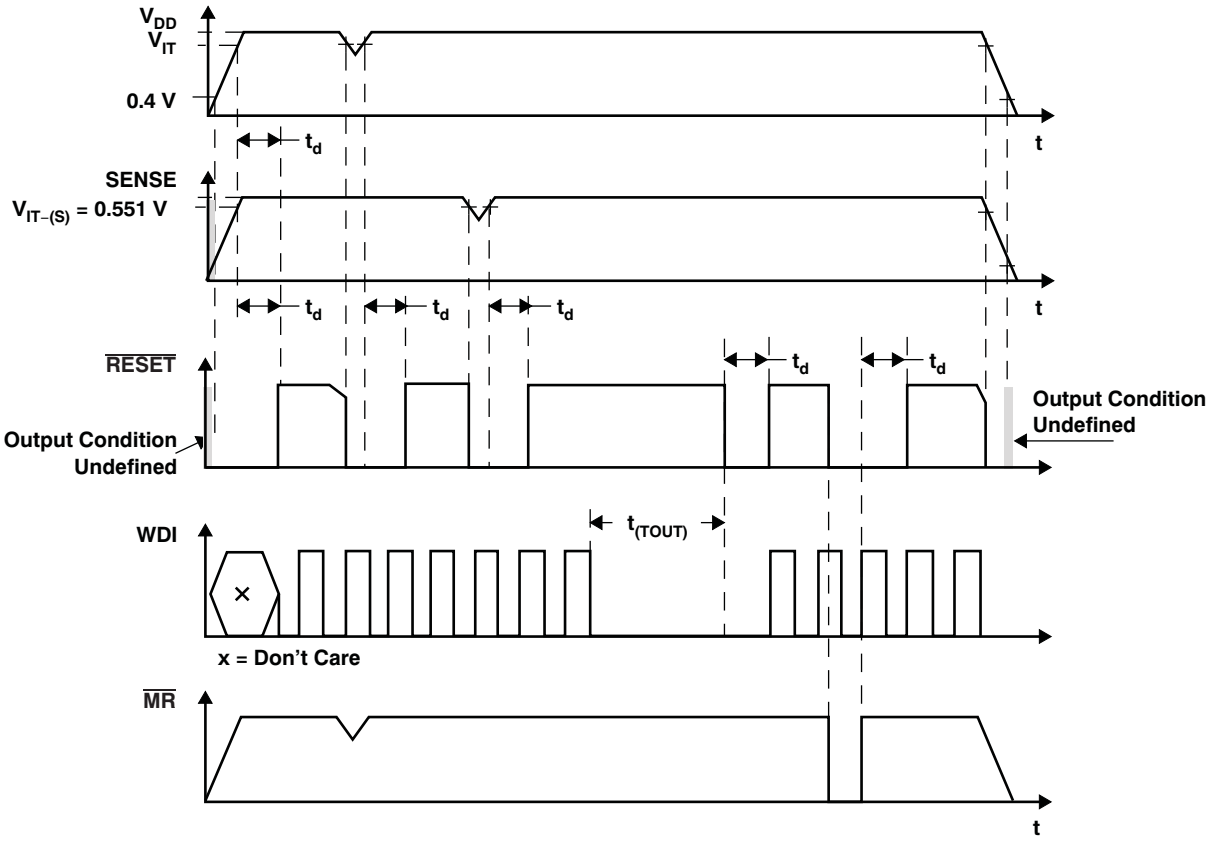

Figure 3. TPS3110 Timing

TYPICAL CHARACTERISTICS

TPS3110E09
SUPPLY CURRENT
vs
SUPPLY VOLTAGE

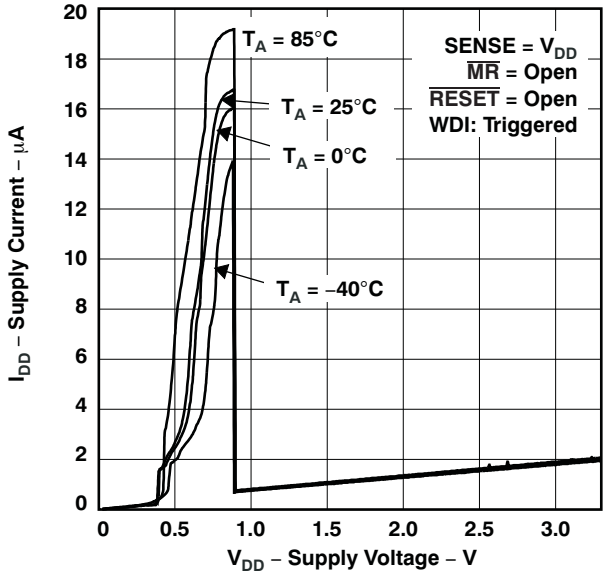

Figure 4.

TPS3110E09
LOW-LEVEL OUTPUT VOLTAGE
vs
LOW-LEVEL OUTPUT CURRENT

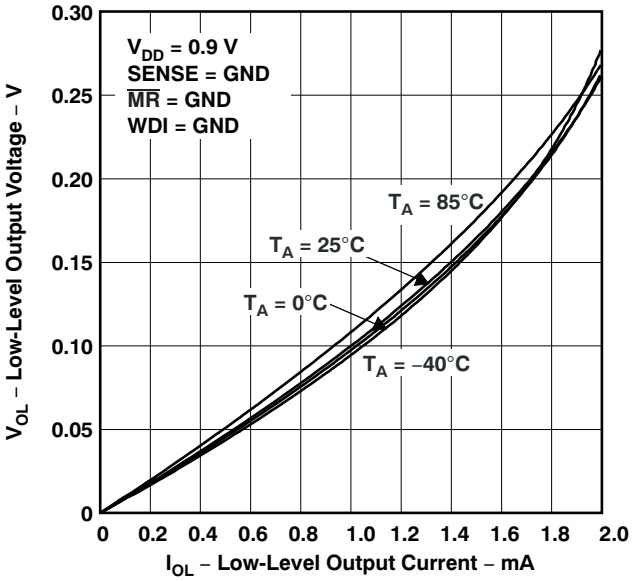

Figure 5.

TPS3110E09
LOW-LEVEL OUTPUT VOLTAGE
vs
LOW-LEVEL OUTPUT CURRENT

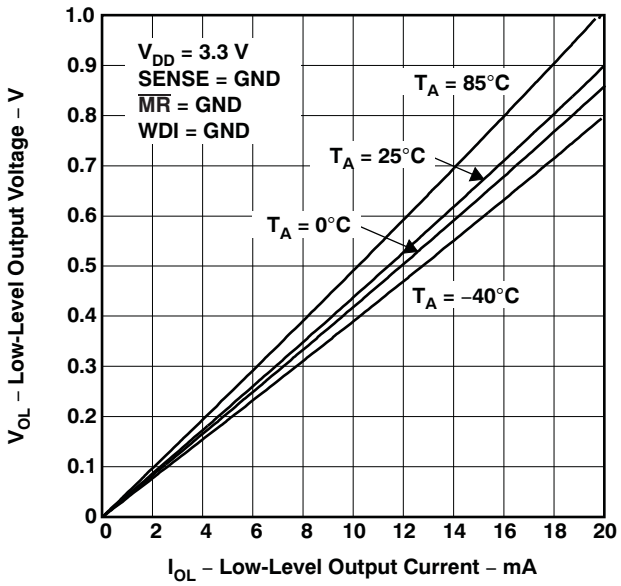

Figure 6.

TPS3110E09
HIGH-LEVEL OUTPUT VOLTAGE
vs
HIGH-LEVEL OUTPUT CURRENT

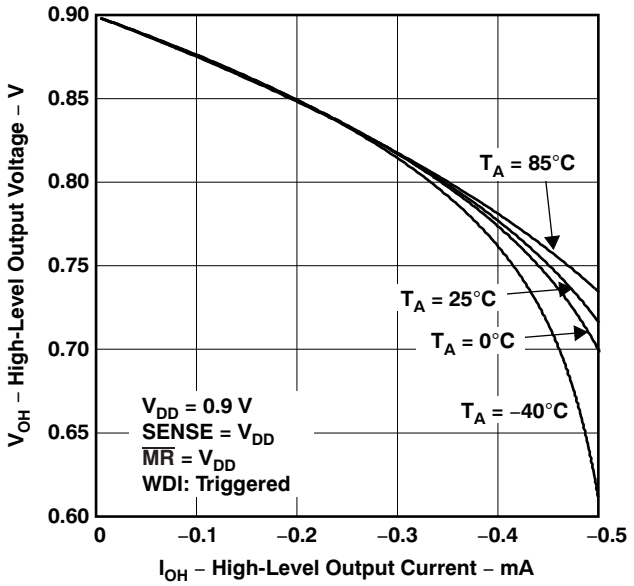

Figure 7.

TYPICAL CHARACTERISTICS (continued)

TPS3110K33
HIGH-LEVEL OUTPUT VOLTAGE
vs
HIGH-LEVEL OUTPUT CURRENT

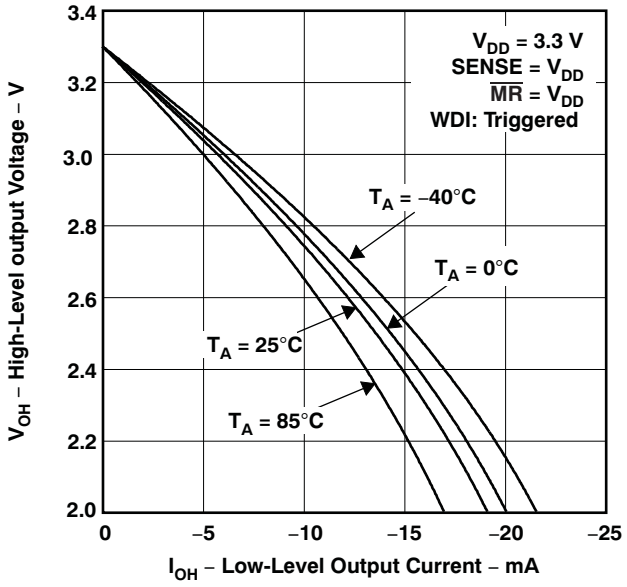

Figure 8.

MINIMUM PULSE DURATION AT V_{DD}
vs
THRESHOLD OVERDRIVE VOLTAGE

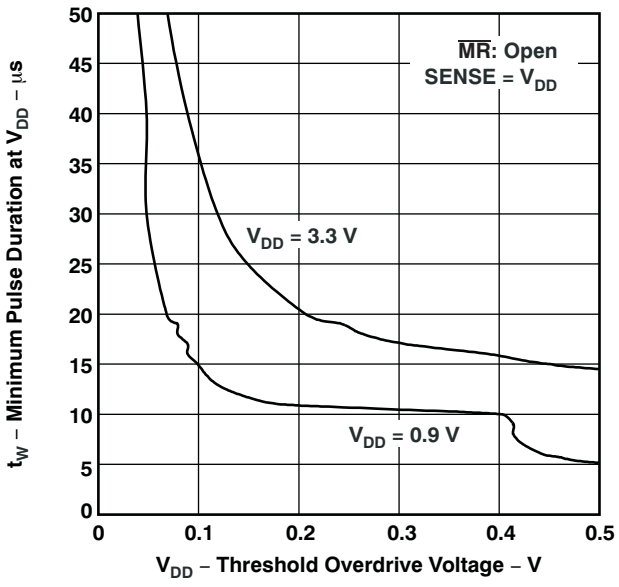

Figure 9.

NORMALIZED THRESHOLD VOLTAGE
vs
FREE-AIR TEMPERATURE

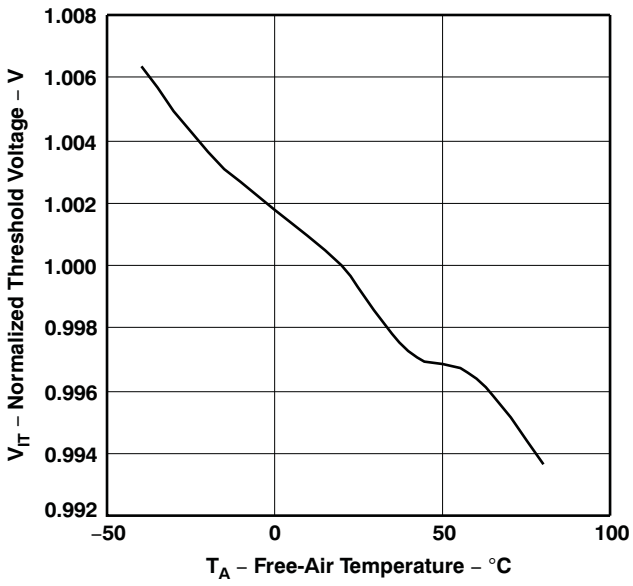

Figure 10.

APPLICATION INFORMATION

The TPS31xx family has a quiescent current in the 1-μA to 2-μA range. When $\overline{\text{RESET}}$ is active, triggered by the voltage monitored at V_{DD}, the quiescent current increases to about 20 μA (see the Electrical Characteristics).

In some applications, it is necessary to minimize the quiescent current even during the reset period. This is especially true when the voltage of a battery is supervised and the $\overline{\text{RESET}}$ is used to shut down the system or for an early warning. In this case, the reset condition lasts for a longer period of time. The current drawn from the battery should almost be zero, especially when the battery is discharged.

For this kind of application, either the TPS3103 or TPS3106 is a good fit. To minimize current consumption, select a version where the threshold voltage is lower than the voltage monitored at V_{DD}. The TPS3106 has two reset outputs. One output ($\overline{\text{RSTVDD}}$) is triggered from the voltage monitored at V_{DD}. The other output ($\overline{\text{RSTSENSE}}$) is triggered from the voltage monitored at SENSE. In the application shown in Figure 11, the TPS3106E09 is used to monitor the input voltage of two NiCd or NiMH cells. The threshold voltage ($V_{(TH)}$ = 0.86 V) was chosen as low as possible to ensure that the supply voltage is always higher than the threshold voltage at V_{DD}. The voltage of the battery is monitored using the SENSE input. The voltage divider was calculated to assert a reset using the $\overline{\text{RSTSENSE}}$ output at 2 × 0.8 V = 1.6 V.

$$R1 = R2 \times \left(\frac{V_{TRIP}}{V_{IT(S)}} - 1 \right) \quad (1)$$

where:

V_{TRIP} is the voltage of the battery at which a reset is asserted and

$V_{IT(S)}$ is the threshold voltage at SENSE = 0.551 V.

R1 was chosen for a resistor current in the 1-μA range.

With V_{TRIP} = 1.6 V:

$R1 \approx 1.9 \times R2$

R1 = 820 kΩ, R2 = 430 kΩ

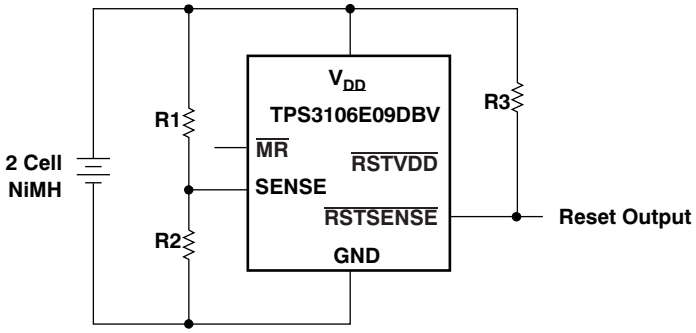

Figure 11. Battery Monitoring with 3-μA Supply Current for Device and Resistor Divider

APPLICATION INFORMATION (continued)

Watchdog

The TPS3110 device integrates a watchdog timer that must be periodically triggered by a positive or negative transition of WDI. When the supervising system fails to retrigger the watchdog circuit within the time-out interval, $\overline{\text{RESET}}$ becomes active for the time period (t_D). This event also reinitializes the watchdog timer.

Manual Reset ($\overline{\text{MR}}$)

Many μC-based products require manual-reset capability, allowing an operator or logic circuitry to initiate a reset. Logic low at $\overline{\text{MR}}$ asserts reset. Reset remains asserted while $\overline{\text{MR}}$ is low and for a time period (t_D) after $\overline{\text{MR}}$ returns high. The input has an internal 100-kΩ pullup resistor, so it can be left open if it is unused.

Connect a normally open momentary switch from $\overline{\text{MR}}$ to GND to create a manual reset function. External debounce is not required. If $\overline{\text{MR}}$ is driven from long cables or if the device is used in noisy environments, connecting a 0.1-μF capacitor from $\overline{\text{MR}}$ to GND provides additional noise immunity.

PFI, $\overline{\text{PFO}}$

The TPS3103 has an integrated power-fail input (PFI) comparator with a separate open-drain power-fail output ($\overline{\text{PFO}}$). The PFI and $\overline{\text{PFO}}$ can be used for low-battery detection, power-fail warning, or for monitoring a power supply other than the main supply.

An additional comparator is provided to monitor voltages other than the nominal supply voltage. The PFI is compared with an internal voltage reference of 0.551 V. If the input voltage falls below the power-fail threshold ($V_{IT\ -\ (S)}$), the $\overline{\text{PFO}}$ goes low. If it goes above 0.551 V plus approximately 15-mV hysteresis, the output returns to high. By connecting two external resistors, it is possible to supervise any voltage above 0.551 V. The sum of both resistors should be approximately 1 MΩ, to minimize power consumption and to ensure that the current into the PFI pin can be neglected, compared with the current through the resistor network. The tolerance of the external resistors should be not more than 1% to ensure minimal variation of sensed voltage. If the power-fail comparator is unused, connect PFI to GND and leave $\overline{\text{PFO}}$ unconnected. For proper operation of the PFI comparator, the supply voltage (V_{DD}) must be higher than 0.8 V.

SENSE

The voltage at the SENSE input is compared with a reference voltage of 0.551 V. If the voltage at SENSE falls below the sense-threshold ($V_{IT-(S)}$), reset is asserted. On the TPS3106, a dedicated $\overline{\text{RSTSENSE}}$ output is available. On the TPS3110, the logic signal from SENSE is OR-wired with the logic signal from V_{DD} or $\overline{\text{MR}}$. An internal timer delays the return of the output to the inactive state, once the voltage at SENSE goes above 0.551 V plus about 15 mV of hysteresis. For proper operation of the SENSE comparator, the supply voltage must be higher than 0.8 V.

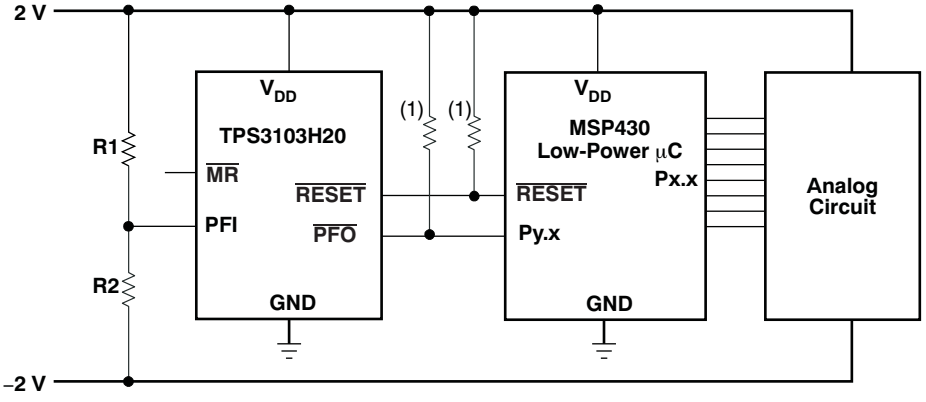

$$V_{(NEG_TH)} = 0.551\ V - \frac{R2}{R1}\ (V_{DD} - 0.551\ V)$$

(1) Resistor may be integrated in μC.

Figure 12. TPS3103 Monitoring a Negative Voltage

APPLICATION INFORMATION (continued)

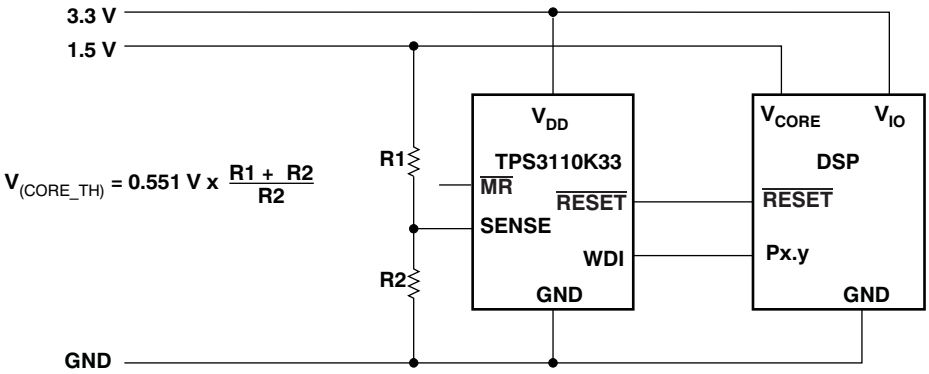

Figure 13. TPS3110 in a DSP System Monitoring Both Supply Voltages

PACKAGING INFORMATION

Orderable Device	Status (1)	Package Type	Package Drawing	Pins	Package Qty	Eco Plan (2)	Lead finish/ Ball material (6)	MSL Peak Temp (3)	Op Temp (°C)	Device Marking (4/5)	Samples
TPS3106K33MDBVREP	ACTIVE	SOT-23	DBV	6	3000	RoHS & Green	NIPDAU	Level-1-260C-UNLIM	-55 to 125	AAVM	Samples
V62/06643-07XE	ACTIVE	SOT-23	DBV	6	3000	RoHS & Green	NIPDAU	Level-1-260C-UNLIM	-55 to 125	AAVM	Samples

(1) The marketing status values are defined as follows:
ACTIVE: Product device recommended for new designs.
LIFEBUY: TI has announced that the device will be discontinued, and a lifetime-buy period is in effect.
NRND: Not recommended for new designs. Device is in production to support existing customers, but TI does not recommend using this part in a new design.
PREVIEW: Device has been announced but is not in production. Samples may or may not be available.
OBSOLETE: TI has discontinued the production of the device.

(2) **RoHS:** TI defines "RoHS" to mean semiconductor products that are compliant with the current EU RoHS requirements for all 10 RoHS substances, including the requirement that RoHS substance do not exceed 0.1% by weight in homogeneous materials. Where designed to be soldered at high temperatures, "RoHS" products are suitable for use in specified lead-free processes. TI may reference these types of products as "Pb-Free".
RoHS Exempt: TI defines "RoHS Exempt" to mean products that contain lead but are compliant with EU RoHS pursuant to a specific EU RoHS exemption.
Green: TI defines "Green" to mean the content of Chlorine (Cl) and Bromine (Br) based flame retardants meet JS709B low halogen requirements of <=1000ppm threshold. Antimony trioxide based flame retardants must also meet the <=1000ppm threshold requirement.

(3) MSL, Peak Temp. - The Moisture Sensitivity Level rating according to the JEDEC industry standard classifications, and peak solder temperature.

(4) There may be additional marking, which relates to the logo, the lot trace code information, or the environmental category on the device.

(5) Multiple Device Markings will be inside parentheses. Only one Device Marking contained in parentheses and separated by a "~" will appear on a device. If a line is indented then it is a continuation of the previous line and the two combined represent the entire Device Marking for that device.

(6) Lead finish/Ball material - Orderable Devices may have multiple material finish options. Finish options are separated by a vertical ruled line. Lead finish/Ball material values may wrap to two lines if the finish value exceeds the maximum column width.

Important Information and Disclaimer: The information provided on this page represents TI's knowledge and belief as of the date that it is provided. TI bases its knowledge and belief on information provided by third parties, and makes no representation or warranty as to the accuracy of such information. Efforts are underway to better integrate information from third parties. TI has taken and continues to take reasonable steps to provide representative and accurate information but may not have conducted destructive testing or chemical analysis on incoming materials and chemicals. TI and TI suppliers consider certain information to be proprietary, and thus CAS numbers and other limited information may not be available for release.

In no event shall TI's liability arising out of such information exceed the total purchase price of the TI part(s) at issue in this document sold by TI to Customer on an annual basis.

OTHER QUALIFIED VERSIONS OF TPS3106-EP :

- Catalog: TPS3106

NOTE: Qualified Version Definitions:

- Catalog - TI's standard catalog product

TAPE AND REEL INFORMATION

REEL DIMENSIONS

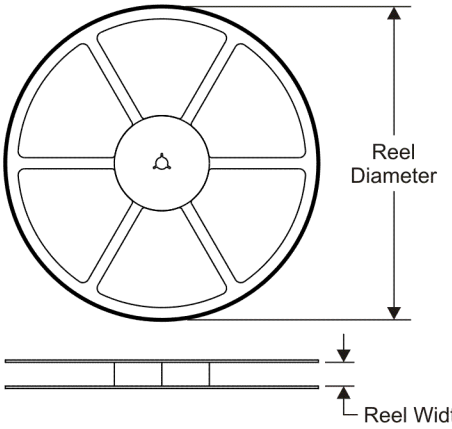

TAPE DIMENSIONS

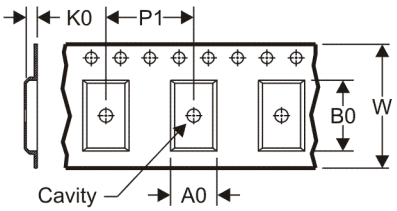

A0	Dimension designed to accommodate the component width
B0	Dimension designed to accommodate the component length
K0	Dimension designed to accommodate the component thickness
W	Overall width of the carrier tape
P1	Pitch between successive cavity centers

QUADRANT ASSIGNMENTS FOR PIN 1 ORIENTATION IN TAPE

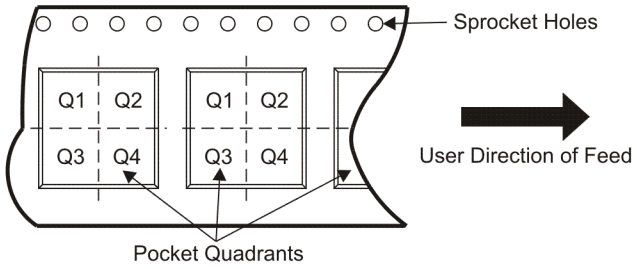

*All dimensions are nominal

Device	Package Type	Package Drawing	Pins	SPQ	Reel Diameter (mm)	Reel Width W1 (mm)	A0 (mm)	B0 (mm)	K0 (mm)	P1 (mm)	W (mm)	Pin1 Quadrant
TPS3106K33MDBVREP	SOT-23	DBV	6	3000	180.0	9.0	3.15	3.2	1.4	4.0	8.0	Q3

TAPE AND REEL BOX DIMENSIONS

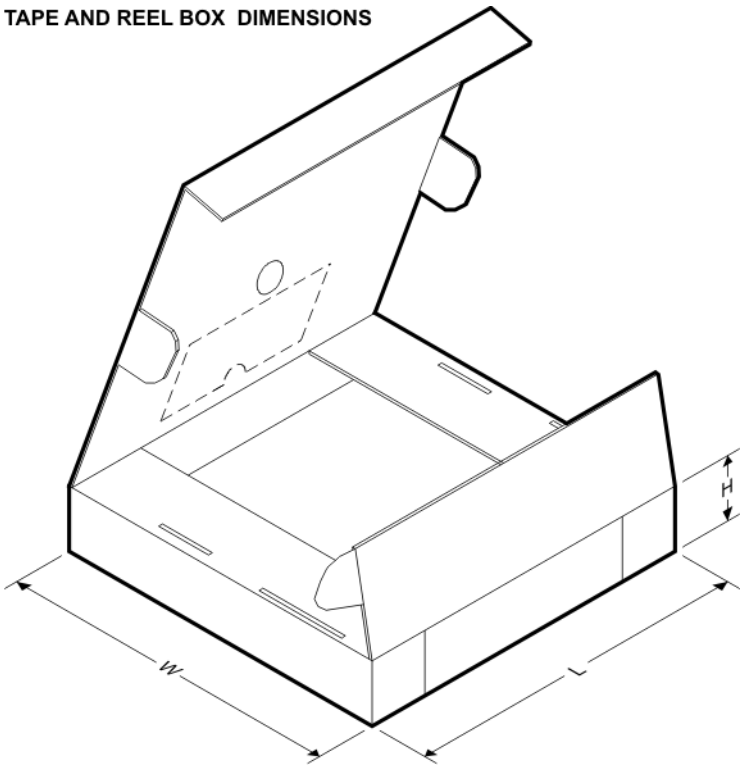

*All dimensions are nominal

Device	Package Type	Package Drawing	Pins	SPQ	Length (mm)	Width (mm)	Height (mm)
TPS3106K33MDBVREP	SOT-23	DBV	6	3000	182.0	182.0	20.0

PACKAGE OUTLINE

DBV0006A

SOT-23 - 1.45 mm max height

SMALL OUTLINE TRANSISTOR

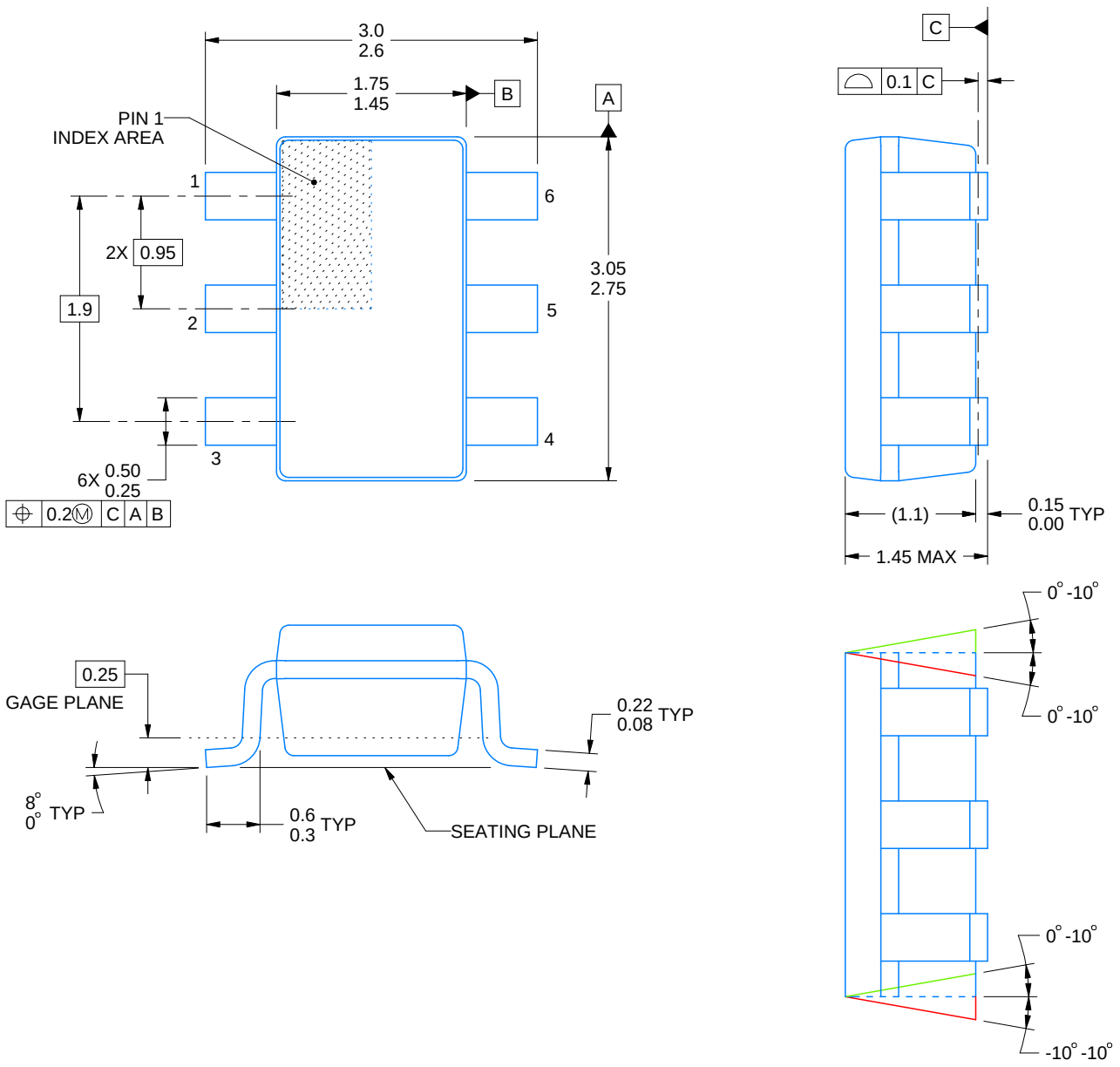

ALTERNATIVE PACKAGE SINGULATION VIEW

4214840/D 09/2023

NOTES:

1. All linear dimensions are in millimeters. Any dimensions in parenthesis are for reference only. Dimensioning and tolerancing per ASME Y14.5M.
2. This drawing is subject to change without notice.
3. Body dimensions do not include mold flash or protrusion. Mold flash and protrusion shall not exceed 0.25 per side.
4. Leads 1,2,3 may be wider than leads 4,5,6 for package orientation.
5. Refernce JEDEC MO-178.

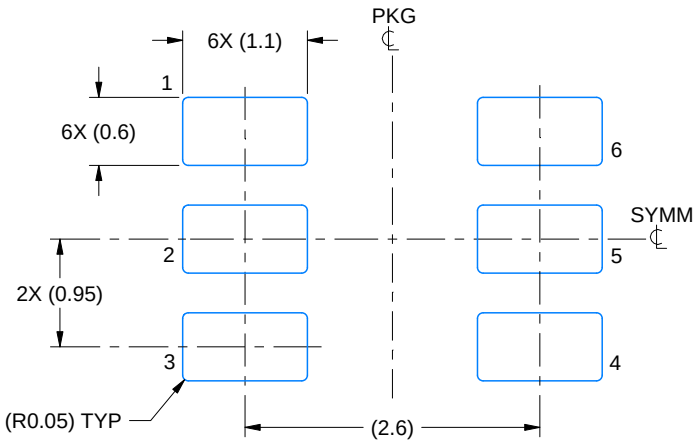

LAND PATTERN EXAMPLE
EXPOSED METAL SHOWN
SCALE:15X

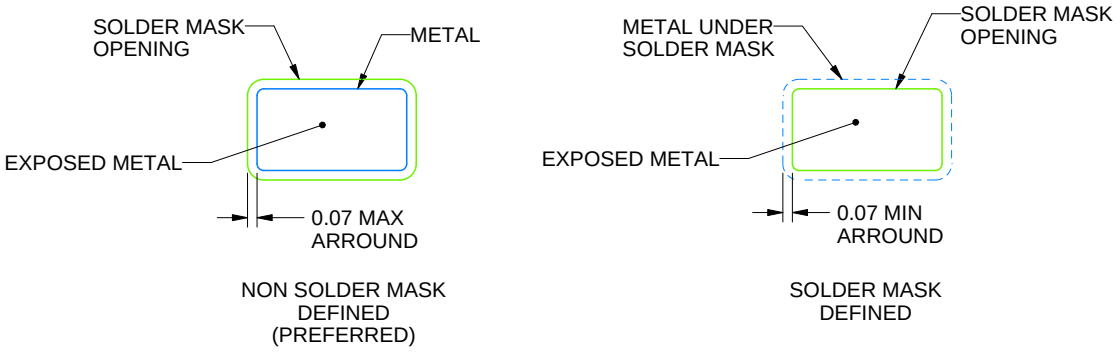

SOLDER MASK DETAILS

4214840/D 09/2023

NOTES: (continued)

6. Publication IPC-7351 may have alternate designs.
7. Solder mask tolerances between and around signal pads can vary based on board fabrication site.

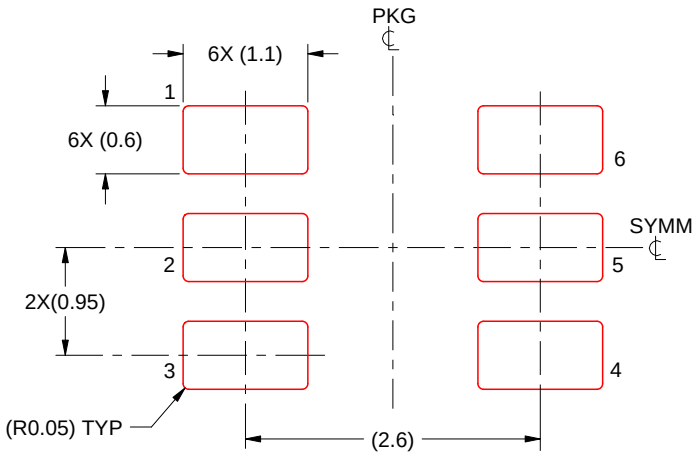

SOLDER PASTE EXAMPLE
BASED ON 0.125 mm THICK STENCIL
SCALE:15X

4214840/D 09/2023

NOTES: (continued)

8. Laser cutting apertures with trapezoidal walls and rounded corners may offer better paste release. IPC-7525 may have alternate design recommendations.
9. Board assembly site may have different recommendations for stencil design.

IMPORTANT NOTICE AND DISCLAIMER

TI PROVIDES TECHNICAL AND RELIABILITY DATA (INCLUDING DATA SHEETS), DESIGN RESOURCES (INCLUDING REFERENCE DESIGNS), APPLICATION OR OTHER DESIGN ADVICE, WEB TOOLS, SAFETY INFORMATION, AND OTHER RESOURCES “AS IS” AND WITH ALL FAULTS, AND DISCLAIMS ALL WARRANTIES, EXPRESS AND IMPLIED, INCLUDING WITHOUT LIMITATION ANY IMPLIED WARRANTIES OF MERCHANTABILITY, FITNESS FOR A PARTICULAR PURPOSE OR NON-INFRINGEMENT OF THIRD PARTY INTELLECTUAL PROPERTY RIGHTS.

These resources are intended for skilled developers designing with TI products. You are solely responsible for (1) selecting the appropriate TI products for your application, (2) designing, validating and testing your application, and (3) ensuring your application meets applicable standards, and any other safety, security, regulatory or other requirements.

These resources are subject to change without notice. TI grants you permission to use these resources only for development of an application that uses the TI products described in the resource. Other reproduction and display of these resources is prohibited. No license is granted to any other TI intellectual property right or to any third party intellectual property right. TI disclaims responsibility for, and you will fully indemnify TI and its representatives against, any claims, damages, costs, losses, and liabilities arising out of your use of these resources.

TI’s products are provided subject to TI’s Terms of Sale or other applicable terms available either on ti.com or provided in conjunction with such TI products. TI’s provision of these resources does not expand or otherwise alter TI’s applicable warranties or warranty disclaimers for TI products.

TI objects to and rejects any additional or different terms you may have proposed.

Mailing Address: Texas Instruments, Post Office Box 655303, Dallas, Texas 75265
Copyright © 2023, Texas Instruments Incorporated