TPS2513A-Q1, TPS2514A-Q1 USB Dedicated Charging Port Controller

1 Features

- AEC-Q100 Qualified:
  - Device HBM ESD Classification Level H2
  - Device CDM ESD Classification Level C5
- Automatically Selects Charge Mode
  - D+ and D- Divider Mode 2.7 V and 2.7 V
  - D+ and D- 1.2 V Mode
  - D+ and D- Shorted Mode per USB Battery Charging Specification, Revision 1.2 (BC1.2)
- Operating Range: 4.5 V to 5.5 V
- Dual USB Charging Port Controller, TPS2513A-Q1
- Single USB Charging Port Controller, TPS2514A-Q1
- Available in SOT23-6 Package

2 Applications

- Automotive USB Power Charger
- Car Charger

3 Description

The TPS2513A-Q1 and TPS2514A-Q1 are USB dedicated charging port (DCP) controllers, used for the charging of most popular mobile phones and tablets. An auto-detect feature monitors USB data line voltage, and automatically provides the correct electrical signatures on the data lines to charge compliant devices among the following dedicated charging schemes:

1. Divider 3 mode, required to apply 2.7 V and 2.7 V on the D+ and D- Lines respectively
2. BC1.2 shorted mode, required to short the D+ Line to the D– Line
3. 1.2 V mode, required to apply 1.2 V on the D+ and D- Lines

Use with the TPS2561A-Q1 and TPS2513A-Q1 (dual channel), TPS2557-Q1 and TPS2514A-Q1 (single channel) for low loss, automotive qualified, USB Charging Port Solution capable of charging all of today's popular phones and tablets.

Device Information (1)

PART NUMBER	PACKAGE	BODY SIZE (NOM)
TPS2513A-Q1	SOT-23 (6)	2.90mm x 1.60mm
TPS2514A-Q1		

(1) For all available packages, see the orderable addendum at the end of the datasheet.

4 Simplified Application Diagram

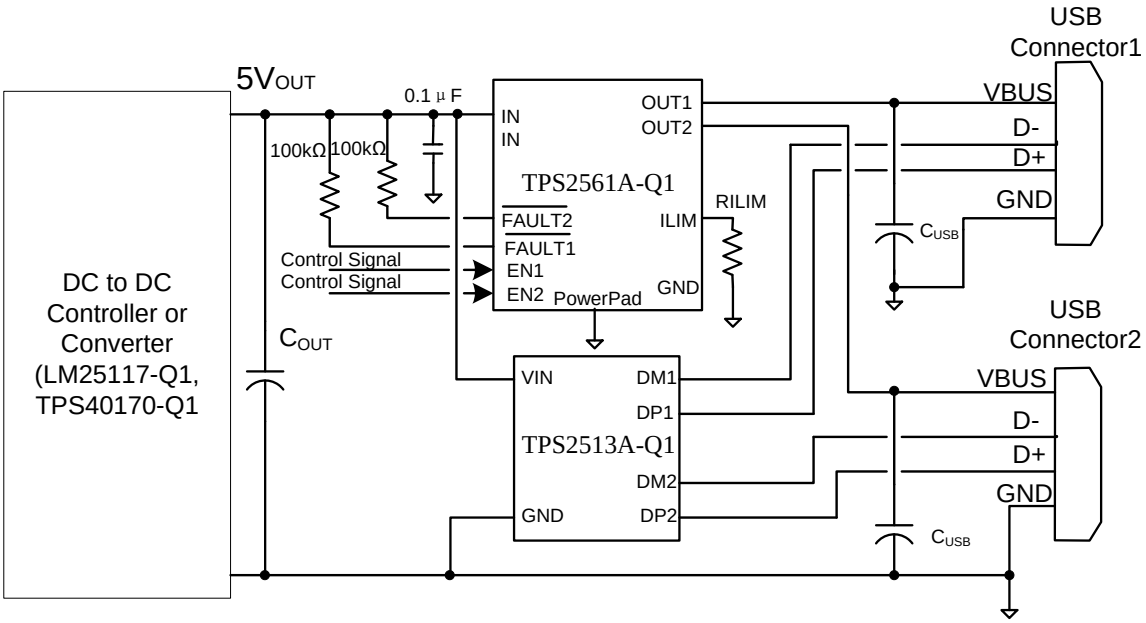

Typical Application as USB Dedicated Charging Port Controller of Dual Port Automotive USB Charge Port Solution

An IMPORTANT NOTICE at the end of this data sheet addresses availability, warranty, changes, use in safety-critical applications, intellectual property matters and other important disclaimers. PRODUCTION DATA.

Table of Contents

1 Features ... 1
2 Applications ... 1
3 Description ... 1
4 Simplified Application Diagram ... 1
5 Revision History ... 2
6 Pin Configuration and Functions ... 3
7 Specifications ... 4
7.1 Absolute Maximum Ratings ... 4
7.2 ESD Ratings ... 4
7.3 Recommended Operating Conditions ... 4
7.4 Thermal Information ... 4
7.5 Electrical Characteristics ... 5
7.6 Typical Characteristics ... 6
8 Detailed Description ... 7
8.1 Overview ... 7
8.2 Functional Block Diagram ... 8
8.3 Feature Description ... 9
8.4 Device Functional Modes ... 11
9 Applications and Implementation ... 12
9.1 Application Information ... 12
9.2 Typical Application ... 12
10 Power Supply Recommendations ... 13
11 Layout ... 14
11.1 Layout Guidelines ... 14
11.2 Layout Example ... 14
12 Device and Documentation Support ... 15
12.1 Related Links ... 15
12.2 Trademarks ... 15
12.3 Electrostatic Discharge Caution ... 15
12.4 Glossary ... 15
13 Mechanical, Packaging, and Orderable Information ... 15

5 Revision History

Changes from Original (May 2014) to Revision A **Page**

- Added device TPA2514A-Q1 to the datasheet ... 1
- Changed Feature From: Dual USB Port Controller To: Dual USB Charging Port Controller, TPS2513A-Q1 ... 1
- Added Feature "Single USB Charging Port Controller, TPS2514A-Q1 ... 1
- Changed the Description text From: "Use with the TPS2561A-Q1 for a low loss, .." To: "Use with the TPS2561A-Q1 and TPS2513A-Q1 (dual channel), TPS2557-Q1 and TPS2514A-Q1 (single channel) for low loss,.." ... 1
- Changed the BODY SIZE (NOM) values in the *Device Information* table ... 1
- Added the TPS2514A-Q1 pin out image and table ... 3
- Changed the Handling Ratings table to the ESD Ratings table ... 4
- Added Figure 5 ... 8
- Changed list item in Layout Guidelines "When USB power switch is used,.." ... 14
- Changed list item in Layout Guidelines "Regarding TPS2561A-Q1 layout guidelines,.." ... 14

Copyright © 2014, Texas Instruments Incorporated

6 Pin Configuration and Functions

TPS2513A-Q1
DBV (SOT23-6)
(TOP VIEW)

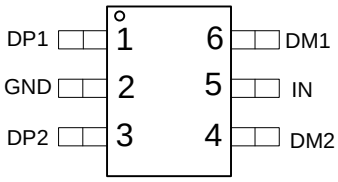

TPS2514A-Q1
DBV (SOT23-6)
(TOP VIEW)

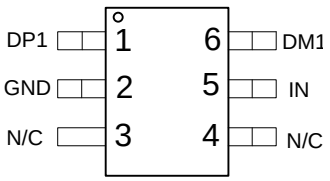

Pin Functions, TPS2513A-Q1

NO.	NAME	TYPE(1)	DESCRIPTION
1	DP1	I/O	Connected to the D+ line of USB connector, provide the correct voltage with attached portable equipment for DCP detection.
2	GND	G	Ground connection
3	DP2	I/O	Connected to the D+ line of USB connector, provide the correct voltage with attached portable equipment for DCP detection.
4	DM2	I/O	Connected to the D– line of USB connector, provide the correct voltage with attached portable equipment for DCP detection.
5	IN	P	Power supply. Connect a ceramic capacitor with a value of 0.1-µF or greater from the IN pin to GND as close to the device as possible.
6	DM1	I/O	Connected to the D– line of USB connector, provide the correct voltage with attached portable equipment for DCP detection.

(1) G = Ground, I = Input, O = Output, P = Power

Pin Functions, TPS2514A-Q1

NO.	NAME	TYPE(1)	DESCRIPTION
1	DP1	I/O	Connected to the D+ line of USB connector, provide the correct voltage with attached portable equipment for DCP detection.
2	GND	G	Ground connection
3	N/C	–	No connect pin, can be grounded or left floating.
4	N/C	–	No connect pin, can be grounded or left floating
5	IN	P	Power supply. Connect a ceramic capacitor with a value of 0.1-µF or greater from the IN pin to GND as close to the device as possible.
6	DM1	I/O	Connected to the D– line of USB connector, provide the correct voltage with attached portable equipment for DCP detection.

(1) G = Ground, I = Input, O = Output, P = Power

Copyright © 2014, Texas Instruments Incorporated

7 Specifications

7.1 Absolute Maximum Ratings[1]

Over recommended junction temperature range, voltages are referenced to GND (unless otherwise noted)

		MIN	MAX	UNIT
Voltage range	IN	–0.3	7	V
	DP1, DP2 output voltage, DM1, DM2 output voltage	–0.3	5.8	
	DP1, DP2 input voltage, DM1, DM2 input voltage	–0.3	5.8	
Continuous output sink current	DP1, DP2 input current, DM1, DM2 input current		35	mA
Continuous output source current	DP1, DP2 output current, DM1, DM2 output current		35	mA
Operating Junction Temperature, T_J		–40	125	°C
Storage temperature range, T_{stg}		–65	150	°C

(1) Stresses beyond those listed under Absolute Maximum Ratings may cause permanent damage to the device. These are stress ratings only, and functional operation of the device at these or any other conditions beyond those indicated under Recommended Operating Conditions is not implied. Exposure to absolute-maximum-rated conditions for extended periods may affect device reliability.

7.2 ESD Ratings

			VALUE	UNIT
$V_{(ESD)}$	Electrostatic discharge	Human-body model (HBM), per AEC Q100-002[1]	±2000	V
		Charged-device model (CDM), per AEC Q100-011	±750	

(1) AEC Q100-002 indicates that HBM stressing shall be in accordance with the ANSI/ESDA/JEDEC JS-001 specification.

7.3 Recommended Operating Conditions

Voltages are referenced to GND (unless otherwise noted), positive current are into pins.

		MIN	MAX	UNIT
V_{IN}	Input voltage of IN	4.5	5.5	V
$V_{(DP1)}$	DP1 data line input voltage	0	5.5	V
$V_{(DM1)}$	DM1 data line input voltage	0	5.5	V
$I_{(DP1)}$	Continuous sink or source current		±10	mA
$I_{(DM1)}$	Continuous sink or source current		±10	mA
V_{DP2}	DP2 data line input voltage	0	5.5	V
$V_{(DM2)}$	DM2 data line input voltage	0	5.5	V
$I_{(DP2)}$	Continuous sink or source current		±10	mA
$I_{(DM2)}$	Continuous sink or source current		±10	mA
T_J	Operating junction temperature	–40	125	°C

7.4 Thermal Information

THERMAL METRIC[1]		DBV (6 PINS)	UNITS
$R\theta_{JA}$	Junction-to-ambient thermal resistance	179.9	°C/W
$R_{\theta JCtop}$	Junction-to-case (top) thermal resistance	117.5	
$R_{\theta JB}$	Junction-to-board thermal resistance	41.9	
ψ_{JT}	Junction-to-top characterization parameter	17.2	
ψ_{JB}	Junction-to-board characterization parameter	41.5	
$R_{\theta JCbot}$	Junction-to-case (bottom) thermal resistance	N/A	

(1) For more information about traditional and new thermal metrics, see the IC Package Thermal Metrics application report, SPRA953.

Copyright © 2014, Texas Instruments Incorporated

7.5 Electrical Characteristics

Conditions are –40°C ≤ (T_J = T_A) ≤ 125°C, 4.5 V ≤ V_{IN} ≤ 5.5 V. Positive current are into pins. Typical values are at 25°C. All voltages are with respect to GND (unless otherwise noted).

PARAMETER		TEST CONDITIONS	MIN	TYP	MAX	UNIT
UNDERVOLTAGE LOCKOUT						
V_{UVLO}	IN rising UVLO threshold voltage		3.9	4.1	4.3	V
	Hysteresis(1)			100		mV
SUPPLY CURRENT						
I_{IN}	IN supply current	4.5 V ≤ V_{IN} ≤ 5.5 V		155	220	µA
BC 1.2 DCP MODE (SHORT MODE)						
$R_{(DPM_SHORT1)}$	DP1 and DM1 shorting resistance	V_{DP1} = 0.8 V, I_{DM1} = 1 mA		157	200	Ω
$R_{(DCHG_SHORT1)}$	Resistance between DP1/DM1 and GND	V_{DP1} = 0.8 V	350	656	1150	kΩ
$V_{(DPL_TH_DETACH1)}$	Voltage threshold on DP1 under which the device goes back to divider mode		310	330	350	mV
$V_{(DPL_TH_DETACH_HYS1)}$	Hysteresis(1)			50		mV
$R_{(DPM_SHORT2)}$	DP2 and DM2 shorting resistance	V_{DP2} = 0.8V, I_{DM2} = 1 mA		157	200	Ω
$R_{(DCHG_SHORT2)}$	Resistance between DP2/DM2 and GND	V_{DP2} = 0.8 V	350	656	1150	kΩ
$V_{(DPL_TH_DETACH2)}$	Voltage threshold on DP2 under which the device goes back to divider mode		310	330	350	mV
$V_{(DPL_TH_DETACH_HYS2)}$	Hysteresis(1)			50		mV
DIVIDER MODE						
$V_{(DP1_2.7V)}$	DP1 output voltage	V_{IN} = 5 V	2.57	2.7	2.84	V
$V_{(DM1_2.7V)}$	DM1 output voltage	V_{IN} = 5 V	2.57	2.7	2.84	V
$R_{(DP1_PAD1)}$	DP1 output impedance	I_{DP1} = –5 µA	24	30	36	kΩ
$R_{(DM1_PAD1)}$	DM1 output impedance	I_{DM1} = –5 µA	24	30	36	kΩ
$V_{(DP2_2.7V)}$	DP2 output voltage	V_{IN} = 5 V	2.57	2.7	2.84	V
$V_{(DM2_2.7V)}$	DM2 output voltage	V_{IN} = 5 V	2.57	2.7	2.84	V
$R_{(DP2_PAD1)}$	DP2 output impedance	I_{DP2} = –5 µA	24	30	36	kΩ
$R_{(DM2_PAD1)}$	DM2 output impedance	I_{DM2} = –5 µA	24	30	36	kΩ
1.2 V / 1.2 V MODE						
$V_{(DP1_1.2V)}$	DP1 output voltage	V_{IN} = 5 V	1.12	1.2	1.28	V
$V_{(DM1_1.2V)}$	DM1 output voltage	V_{IN} = 5 V	1.12	1.2	1.28	V
$R_{(DM1_PAD2)}$	DP1 output impedance	I_{DP1} = –5 µA	80	102	130	kΩ
$R_{(DP1_PAD2)}$	DM1 output impedance	I_{DM1} = –5 µA	80	102	130	kΩ
$V_{(DP2_1.2V)}$	DP2 output voltage	V_{IN} = 5 V	1.12	1.2	1.28	V
$V_{(DM2_1.2V)}$	DM2 output voltage	V_{IN} = 5 V	1.12	1.2	1.28	V
$R_{(DP2_PAD2)}$	DP2 output impedance	I_{DP2} = –5 µA	80	102	130	kΩ
$R_{(DM2_PAD2)}$	DM2 output impedance	I_{DM2} = –5 µA	80	102	130	kΩ

(1) Parameters provided for reference only, and do not constitute part of TI's published device specifications for purposes of TI's product warranty

Copyright © 2014, Texas Instruments Incorporated

7.6 Typical Characteristics

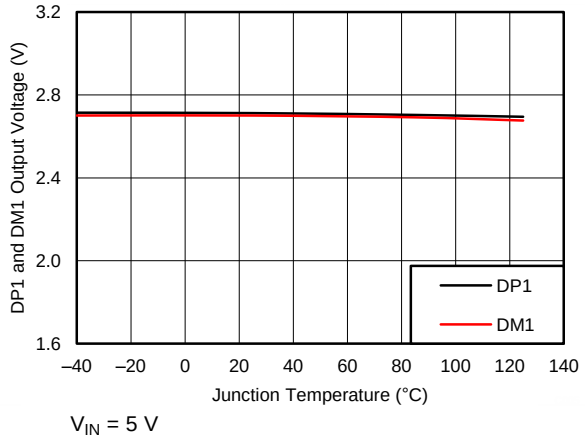

Figure 1. DP1 and DM1 Output Voltage vs Temperature

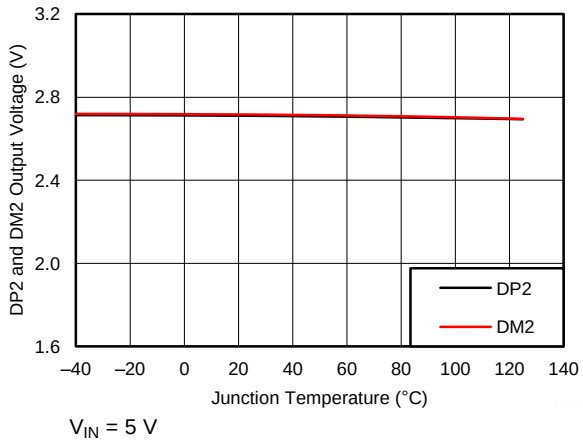

Figure 2. DP2 and DM2 Output Voltage vs Temperature

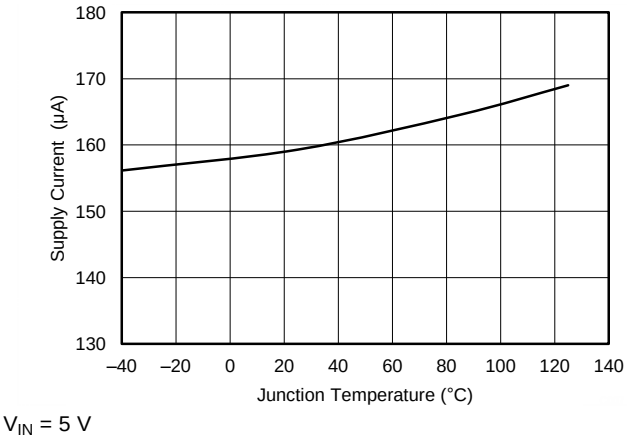

Figure 3. Supply Current vs Temperature

Copyright © 2014, Texas Instruments Incorporated

8 Detailed Description

8.1 Overview

TPS2513A-Q1 and TPS2514A-Q1 are dedicated charging port controllers, used for the charging of most popular mobile phones and tablets.

The following overview references various industry standards. It is always recommended to consult the latest standard to ensure the most recent and accurate information.

Rechargeable portable equipment requires an external power source to charge its batteries. USB ports are convenient locations for charging because of an available 5-V power source. Universally accepted standards are required to ensure host and client-side devices meet the power management requirements. Traditionally, USB host ports following the USB 2.0 Specification must provide at least 500 mA to downstream client-side devices. Because multiple USB devices can be attached to a single USB port through a bus-powered hub, it is the responsibility of the client-side device to negotiate the power allotment from the host to guarantee the total current draw does not exceed 500 mA. In general, each USB device can subsequently request more current, which is granted in steps of 100 mA up 500 mA total. The host may grant or deny the request based on the available current.

Additionally, the success of the USB technology makes the micro-USB connector a popular choice for wall adapter cables. This allows a portable device to charge from both a wall adapter and USB port with only one connector.

One common difficulty has resulted from this. As USB charging has gained popularity, the 500-mA minimum defined by the USB 2.0 Specification or 900 mA defined in the USB 3.0 Specification, has become insufficient for many handsets, tablets and personal media players (PMP) which have a higher rated charging current. Wall adapters and car chargers can provide much more current than 500 mA or 900 mA to fast charge portable devices. Several new standards have been introduced defining protocol handshaking methods that allow host and client devices to acknowledge and draw additional current beyond the 500 mA (defined in the USB 2.0 Specification) or 900 mA (defined in the USB 3.0 Specification) minimum while using a single micro-USB input connector.

Copyright © 2014, Texas Instruments Incorporated

8.2 Functional Block Diagram

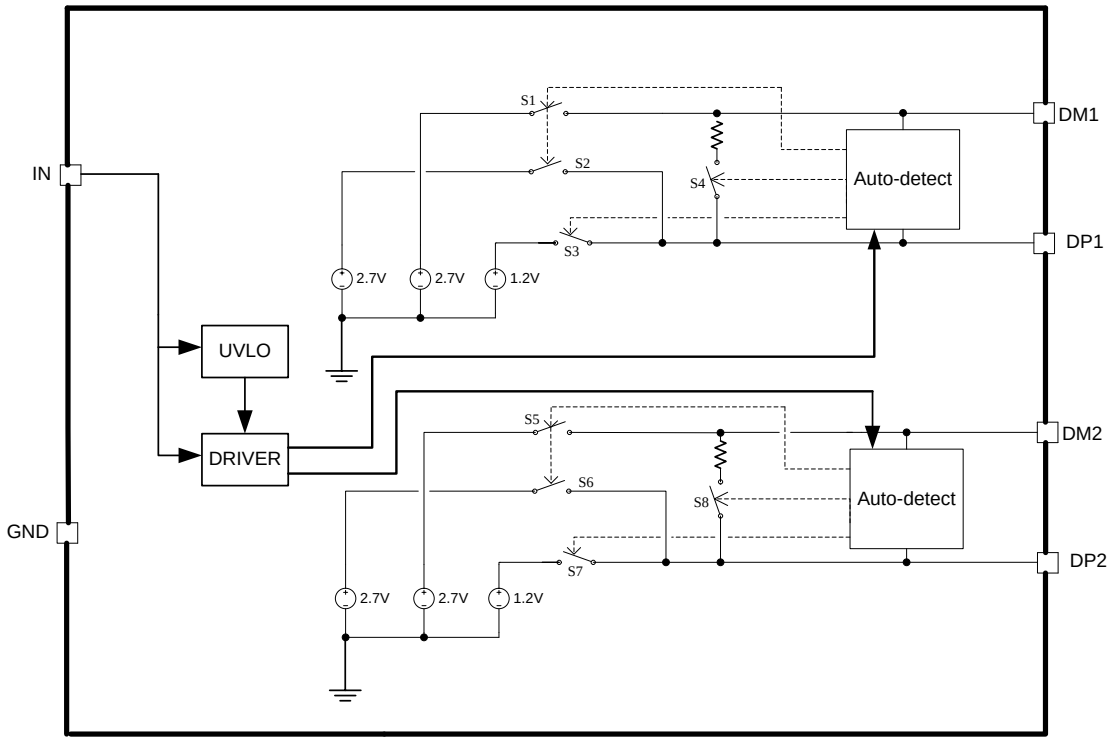

Figure 4. TPS2513A-Q1 Functional Block Diagram

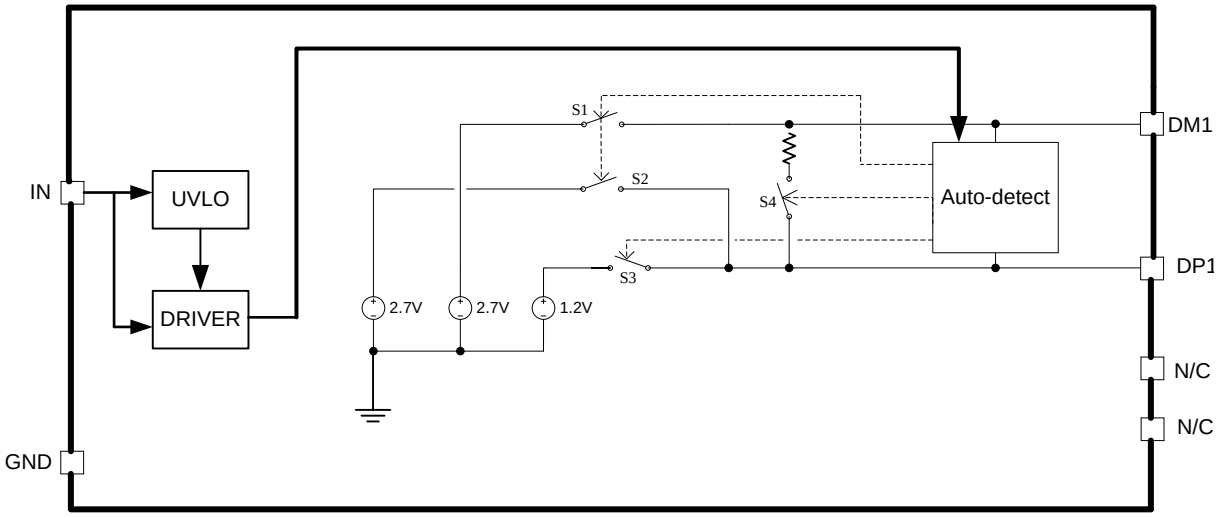

Figure 5. TPS2514A-Q1 Functional Block Diagram

Copyright © 2014, Texas Instruments Incorporated

8.3 Feature Description

8.3.1 BC1.2

TPS2513A-Q1 and TPS2514A-Q1 support four of the most common protocols:

- USB Battery Charging Specification, Revision 1.2 (BC1.2)
- Chinese Telecommunications Industry Standard YD/T 1591-2009
- Divider Mode
- 1.2 V Mode

YD/T 1591-2009 is a subset of the BC1.2 specification supported by the vast majority of devices that implement USB charging. Divider and 1.2-V charging schemes are supported in devices from specific yet popular device makers. BC1.2 has three different port types, listed as follows.

- Standard downstream port (SDP)
- Charging downstream port (CDP)
- Dedicated charging port (DCP)

The BC1.2 Specification defines a charging port as a downstream facing USB port that provides power for charging portable equipment.

Table 1 shows different port operating modes according to the BC1.2 Specification.

Table 1. Operating Modes Table

PORT TYPE	SUPPORTS USB2.0 COMMUNICATION	MAXIMUM ALLOWABLE CURRENT DRAWN BY PORTABLE EQUIPMENT (A)
SDP (USB 2.0)	Yes	0.5
SDP (USB 3.0)	Yes	0.9
CDP	Yes	1.5
DCP	No	1.5

The BC1.2 Specification defines the protocol necessary to allow portable equipment to determine what type of port it is connected to so that it can allot its maximum allowable current drawn. The hand-shaking process is two steps. During step one, the primary detection, the portable equipment outputs a nominal 0.6 V output on its D+ line and reads the voltage input on its D– line. The portable device concludes it is connected to a SDP if the voltage is less than the nominal data detect voltage of 0.3 V. The portable device concludes that it is connected to a Charging Port if the D– voltage is greater than the nominal data detect voltage of 0.3V and less than 0.8 V. The second step, the secondary detection, is necessary for portable equipment to determine between a CDP and a DCP. The portable device outputs a nominal 0.6 V output on its D– line and reads the voltage input on its D+ line. The portable device concludes it is connected to a CDP if the data line being remains is less than the nominal data detect voltage of 0.3 V. The portable device concludes it is connected to a DCP if the data line being read is greater than the nominal data detect voltage of 0.3 V and less than 0.8 V.

8.3.2 Undervoltage Lockout (UVLO)

The undervoltage lockout (UVLO) circuit disables DP1, DM1, DP2 and DM2 output voltage until the input voltage reaches the UVLO turn-on threshold. Built-in hysteresis prevents unwanted oscillations due to input voltage drop from large current surges.

Copyright © 2014, Texas Instruments Incorporated

8.3.3 DCP Auto-Detect

TPS2513A-Q1 and TPS2514A-Q1 integrate an auto-detect feature to support Divider 3 mode, shorted mode and 1.2 V modes. If a divider device is attached, 2.7 V is applied to the DP pin and 2.7 V is applied to the DM pin. If a BC1.2-compliant device is attached, the TPS251xA-Q1 automatically switches into shorted mode. If a device compliant with the 1.2 V / 1.2 V charging scheme is attached, 1.2 V is applied on both the DP pin and the DM pin. The functional diagram of DCP auto-detect feature (DM1 and DP1) is shown in Figure 6. DCP auto-detect feature (DM2 and DP2) has the same functional configuration.

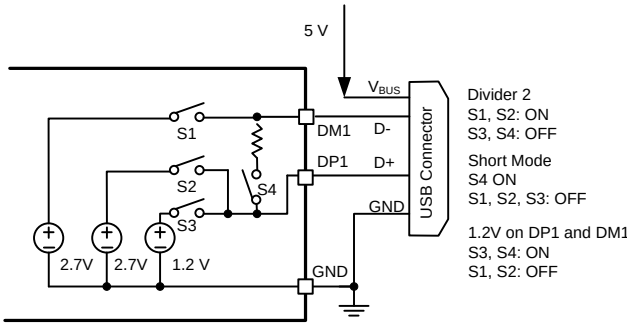

Figure 6. DCP Auto-Detect Functional Diagram

Copyright © 2014, Texas Instruments Incorporated

8.4 Device Functional Modes

8.4.1 Shorted Mode

The USB BC1.2 Specification and the Chinese Telecommunications Industry Standard YD/T 1591-2009 specify that the D+ and D– data lines should be shorted together with a maximum series impedance of 200 Ω. This is shown in Figure 7.

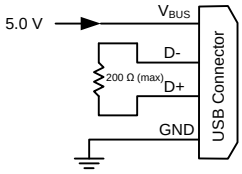

Figure 7. Shorted Mode

8.4.2 Divider Mode

There are three charging schemes for divider mode. They are named after Divider 1, Divider 2, and Divider 3 that are shown in Figure 8, Figure 9, and Figure 10. The Divider 1 charging scheme is used for 5-W adapters, and applies 2 V to the D+ line and 2.7 V to the D– data line. The Divider 2 charging scheme is used for 10-W adapters, and applies 2.7 V on the D+ line and 2 V is applied on the D– line. The Divider 3 charging scheme is used for 12-W adapters, and applies 2.7 V on D+ and D- lines. TPS2513A-Q1 and TPS2514A-Q1 only integrate Divider 3 charging scheme.

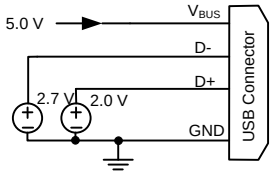

Figure 8. Divider 1

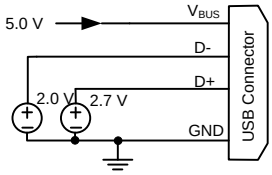

Figure 9. Divider 2

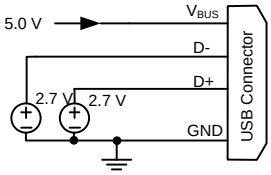

Figure 10. Divider 3

8.4.3 1.2 V Mode

As shown in Figure 11, some tablet USB chargers require 1.2 V on the shorted data lines of the USB connector. The maximum resistance between the D+ line and the D- line is 200 Ω.

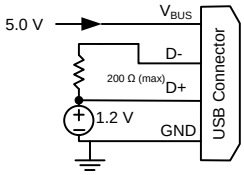

Figure 11. 1.2 V Mode

The device is a USB dedicated charging port (DCP) controllers. Applications include vehicle power charger, wall adapters with USB DCP and other USB chargers. The device DCP controllers have the auto-detect feature that monitors the D+ and D– line voltages of the USB connector, providing the correct electrical signatures on the DP and DM pins for the correct detections of compliant portable devices to fast charge. These portable devices include smart phones, 5-V tablets and personal media players.

Copyright © 2014, Texas Instruments Incorporated

9 Applications and Implementation

9.1 Application Information

The device is a dual channel USB charging port controller. It can be used for automotive USB charging port to support universal charging.

9.2 Typical Application

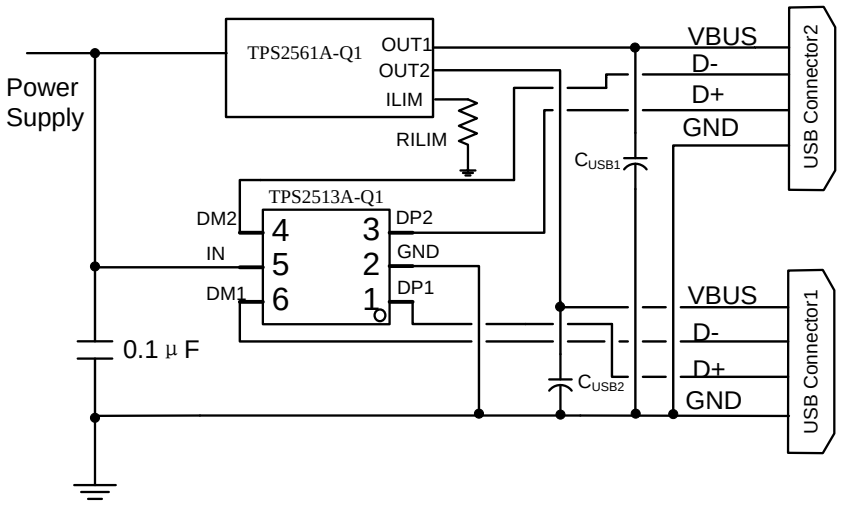

Figure 12. Typical Application Schematic, Dual Ports Charger

9.2.1 Design Requirements

For dual USB ports, request that both ports support fast charge portable device compatible with divider 3, 1.2 V, and BC1.2 shorted mode.

9.2.2 Detailed Design Procedure

9.2.2.1 USB Power Switch

Some chargers requests that the USB port have an overcurrent protection when short circuits are encountered, TPS2561A-Q1 (SLVSCC6) is recommended.

The TPS2513A-Q1 divider 3 mode can support a maximum charging current up to 2.4 A.

When set, the TPS2561A-Q1 current limit (R_{ILIM}) should keep each channel current limit above 2.4 A. For the correct current limit setting, refer to the TPS2561A-Q1 data sheet.

Copyright © 2014, Texas Instruments Incorporated

Typical Application (continued)

9.2.3 Application Curves

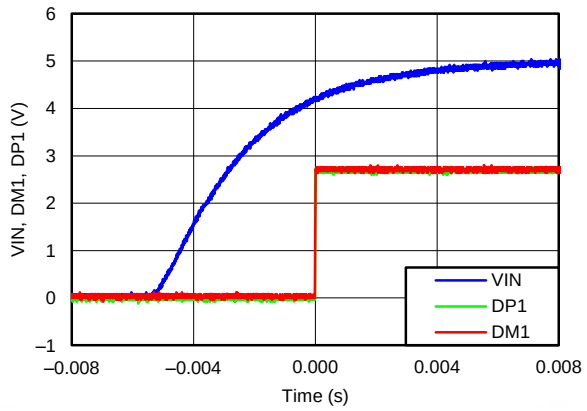

Figure 13. Power On (DM1 and DP1)

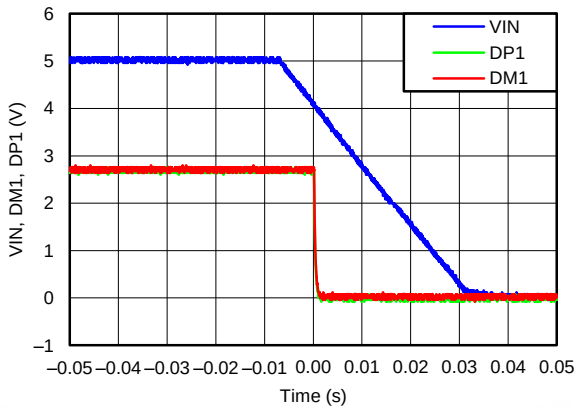

Figure 14. Power Off (DM1 and DP1)

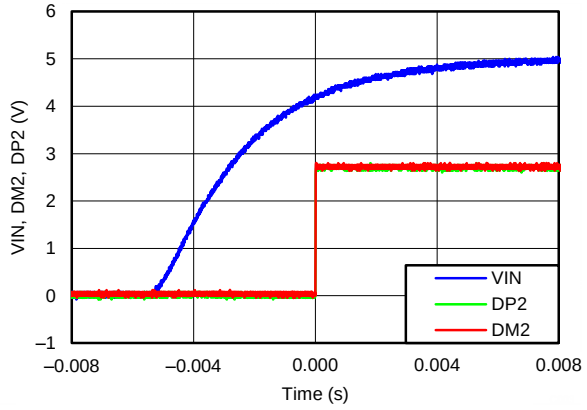

Figure 15. Power On (DM2 and DP2)

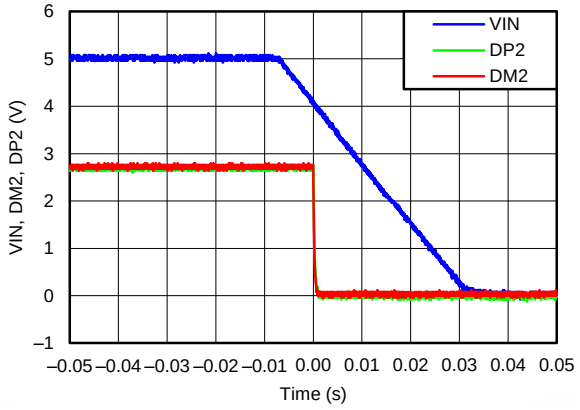

Figure 16. Power Off (DM2 and DP2)

10 Power Supply Recommendations

The devices only provide the correct electrical signatures on the data line of USB charger port and do not provide any power for the V_{BUS}. If a USB power switch is needed as an overcurrent protector, the TPS2561A-Q1 (SLVSCC6) is recommend.

11 Layout

11.1 Layout Guidelines

- For all applications, a 0.1-µF or greater ceramic bypass capacitor between IN and GND is recommended as close to the device as possible for local noise decoupling.
- When USB power switch is used, recommend connect TPS2513A-Q1 and TPS2514A-Q1 IN pin together with USB power switch IN pin. For TPS2513A-Q1, Dual channel USB power switch recommend TPS2561A-Q1, for TPS2514A-Q1, single channel USB power switch recommend TPS2557-Q1.
- Regarding TPS2561A-Q1 layout guidelines, see the TPS2561A-Q1 data sheet (SLVSCC6). Regarding TPS2557-Q1 layout guidelines, see the TPS2557-Q1 data sheet (SLVSC97).
- DP1 and DM1 provide one charging port controller, DP2 and DM2 provide another one charging port controller, when routing the trace, need consider the matching between DP and DM.

11.2 Layout Example

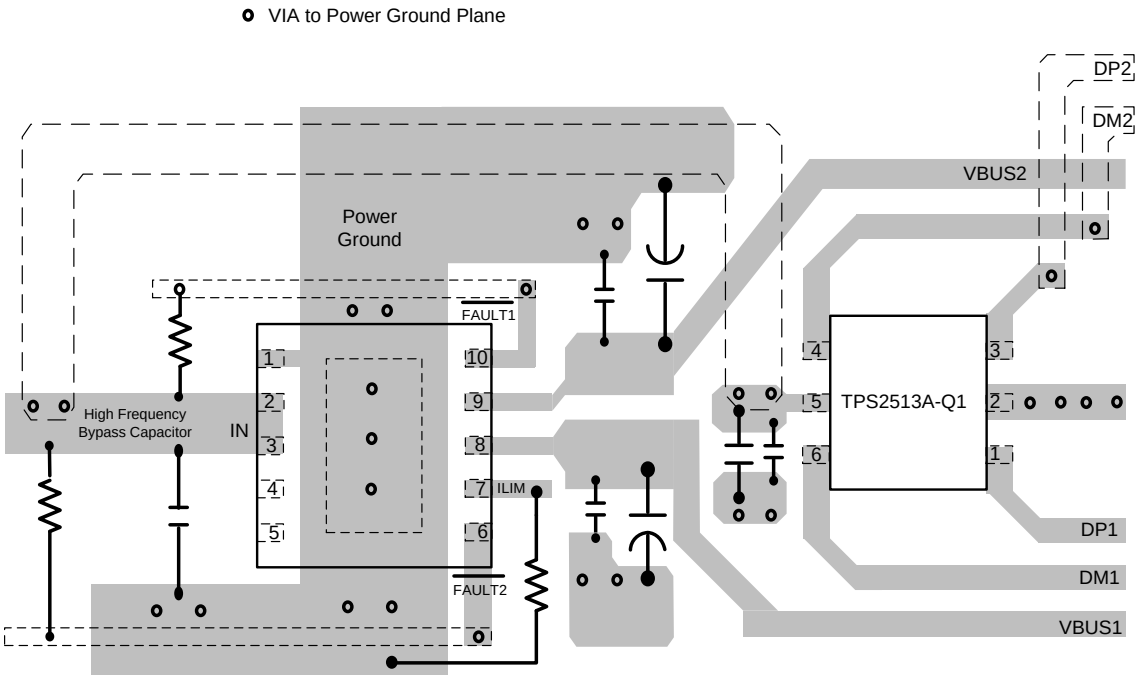

Copyright © 2014, Texas Instruments Incorporated

12 Device and Documentation Support

12.1 Related Links

The table below lists quick access links. Categories include technical documents, support and community resources, tools and software, and quick access to sample or buy.

Table 2. Related Links

PARTS	PRODUCT FOLDER	SAMPLE & BUY	TECHNICAL DOCUMENTS	TOOLS & SOFTWARE	SUPPORT & COMMUNITY
TPS2513A-Q1	Click here	Click here	Click here	Click here	Click here
TPS2514A-Q1	Click here	Click here	Click here	Click here	Click here

12.2 Trademarks

All trademarks are the property of their respective owners.

12.3 Electrostatic Discharge Caution



These devices have limited built-in ESD protection. The leads should be shorted together or the device placed in conductive foam during storage or handling to prevent electrostatic damage to the MOS gates.

12.4 Glossary

SLYZ022 — *TI Glossary*.

This glossary lists and explains terms, acronyms, and definitions.

13 Mechanical, Packaging, and Orderable Information

The following pages include mechanical packaging and orderable information. This information is the most current data available for the designated devices. This data is subject to change without notice and revision of this document. For browser-based versions of this data sheet, refer to the left-hand navigation.

Copyright © 2014, Texas Instruments Incorporated

PACKAGING INFORMATION

Orderable Device	Status (1)	Package Type	Package Drawing	Pins	Package Qty	Eco Plan (2)	Lead finish/ Ball material (6)	MSL Peak Temp (3)	Op Temp (°C)	Device Marking (4/5)	Samples
TPS2513AQDBVRQ1	ACTIVE	SOT-23	DBV	6	3000	RoHS & Green	SN	Level-1-260C-UNLIM	-40 to 125	PB6Q	Samples
TPS2513AQDBVTQ1	ACTIVE	SOT-23	DBV	6	250	RoHS & Green	SN	Level-1-260C-UNLIM	-40 to 125	PB6Q	Samples
TPS2514AQDBVRQ1	ACTIVE	SOT-23	DBV	6	3000	RoHS & Green	SN	Level-1-260C-UNLIM	-40 to 125	ZBAW	Samples
TPS2514AQDBVTQ1	ACTIVE	SOT-23	DBV	6	250	RoHS & Green	SN	Level-1-260C-UNLIM	-40 to 125	ZBAW	Samples

(1) The marketing status values are defined as follows:
ACTIVE: Product device recommended for new designs.
LIFEBUY: TI has announced that the device will be discontinued, and a lifetime-buy period is in effect.
NRND: Not recommended for new designs. Device is in production to support existing customers, but TI does not recommend using this part in a new design.
PREVIEW: Device has been announced but is not in production. Samples may or may not be available.
OBSOLETE: TI has discontinued the production of the device.

(2) **RoHS:** TI defines "RoHS" to mean semiconductor products that are compliant with the current EU RoHS requirements for all 10 RoHS substances, including the requirement that RoHS substance do not exceed 0.1% by weight in homogeneous materials. Where designed to be soldered at high temperatures, "RoHS" products are suitable for use in specified lead-free processes. TI may reference these types of products as "Pb-Free".
RoHS Exempt: TI defines "RoHS Exempt" to mean products that contain lead but are compliant with EU RoHS pursuant to a specific EU RoHS exemption.
Green: TI defines "Green" to mean the content of Chlorine (Cl) and Bromine (Br) based flame retardants meet JS709B low halogen requirements of <=1000ppm threshold. Antimony trioxide based flame retardants must also meet the <=1000ppm threshold requirement.

(3) MSL, Peak Temp. - The Moisture Sensitivity Level rating according to the JEDEC industry standard classifications, and peak solder temperature.

(4) There may be additional marking, which relates to the logo, the lot trace code information, or the environmental category on the device.

(5) Multiple Device Markings will be inside parentheses. Only one Device Marking contained in parentheses and separated by a "~" will appear on a device. If a line is indented then it is a continuation of the previous line and the two combined represent the entire Device Marking for that device.

(6) Lead finish/Ball material - Orderable Devices may have multiple material finish options. Finish options are separated by a vertical ruled line. Lead finish/Ball material values may wrap to two lines if the finish value exceeds the maximum column width.

Important Information and Disclaimer: The information provided on this page represents TI's knowledge and belief as of the date that it is provided. TI bases its knowledge and belief on information provided by third parties, and makes no representation or warranty as to the accuracy of such information. Efforts are underway to better integrate information from third parties. TI has taken and

continues to take reasonable steps to provide representative and accurate information but may not have conducted destructive testing or chemical analysis on incoming materials and chemicals. TI and TI suppliers consider certain information to be proprietary, and thus CAS numbers and other limited information may not be available for release.

In no event shall TI's liability arising out of such information exceed the total purchase price of the TI part(s) at issue in this document sold by TI to Customer on an annual basis.

OTHER QUALIFIED VERSIONS OF TPS2513A-Q1, TPS2514A-Q1 :

- Catalog: TPS2513A, TPS2514A

NOTE: Qualified Version Definitions:

- Catalog - TI's standard catalog product

TAPE AND REEL INFORMATION

REEL DIMENSIONS

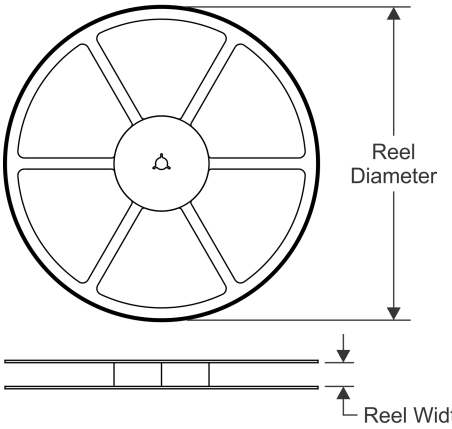

TAPE DIMENSIONS

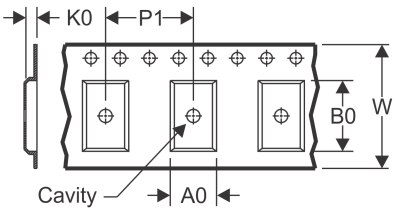

A0	Dimension designed to accommodate the component width
B0	Dimension designed to accommodate the component length
K0	Dimension designed to accommodate the component thickness
W	Overall width of the carrier tape
P1	Pitch between successive cavity centers

QUADRANT ASSIGNMENTS FOR PIN 1 ORIENTATION IN TAPE

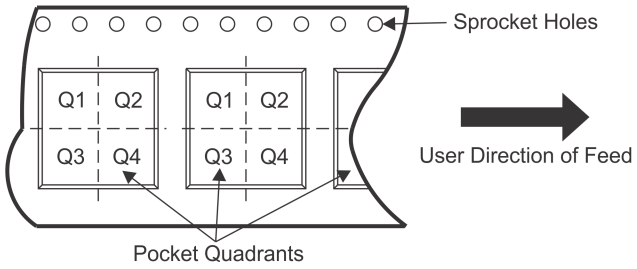

*All dimensions are nominal

Device	Package Type	Package Drawing	Pins	SPQ	Reel Diameter (mm)	Reel Width W1 (mm)	A0 (mm)	B0 (mm)	K0 (mm)	P1 (mm)	W (mm)	Pin1 Quadrant
TPS2513AQDBVRQ1	SOT-23	DBV	6	3000	178.0	9.0	3.23	3.17	1.37	4.0	8.0	Q3
TPS2513AQDBVTQ1	SOT-23	DBV	6	250	178.0	9.0	3.23	3.17	1.37	4.0	8.0	Q3
TPS2514AQDBVRQ1	SOT-23	DBV	6	3000	178.0	9.0	3.23	3.17	1.37	4.0	8.0	Q3
TPS2514AQDBVTQ1	SOT-23	DBV	6	250	178.0	9.0	3.23	3.17	1.37	4.0	8.0	Q3

TAPE AND REEL BOX DIMENSIONS

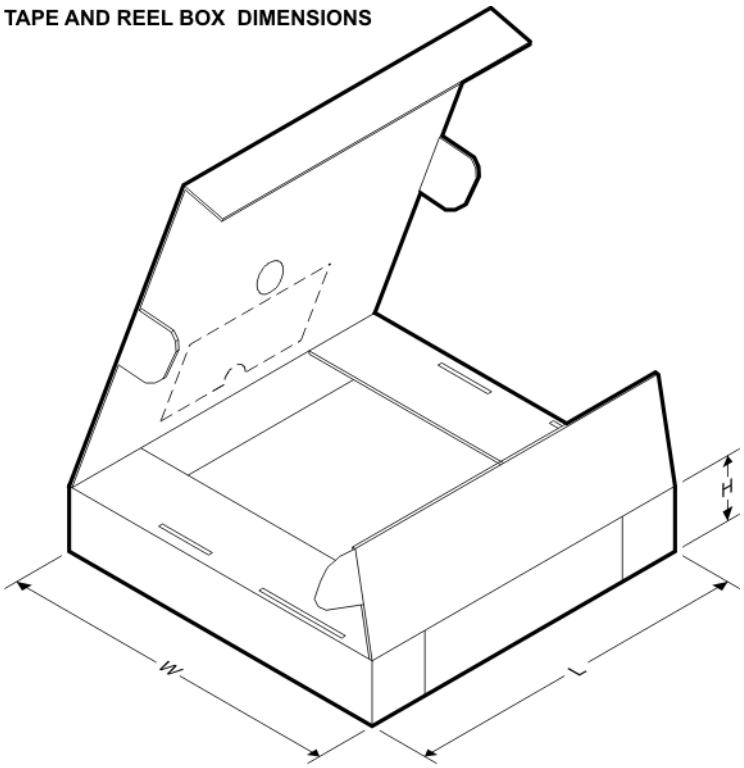

*All dimensions are nominal

Device	Package Type	Package Drawing	Pins	SPQ	Length (mm)	Width (mm)	Height (mm)
TPS2513AQDBVRQ1	SOT-23	DBV	6	3000	180.0	180.0	18.0
TPS2513AQDBVTQ1	SOT-23	DBV	6	250	180.0	180.0	18.0
TPS2514AQDBVRQ1	SOT-23	DBV	6	3000	180.0	180.0	18.0
TPS2514AQDBVTQ1	SOT-23	DBV	6	250	180.0	180.0	18.0

PACKAGE OUTLINE

DBV0006A

SOT-23 - 1.45 mm max height

SMALL OUTLINE TRANSISTOR

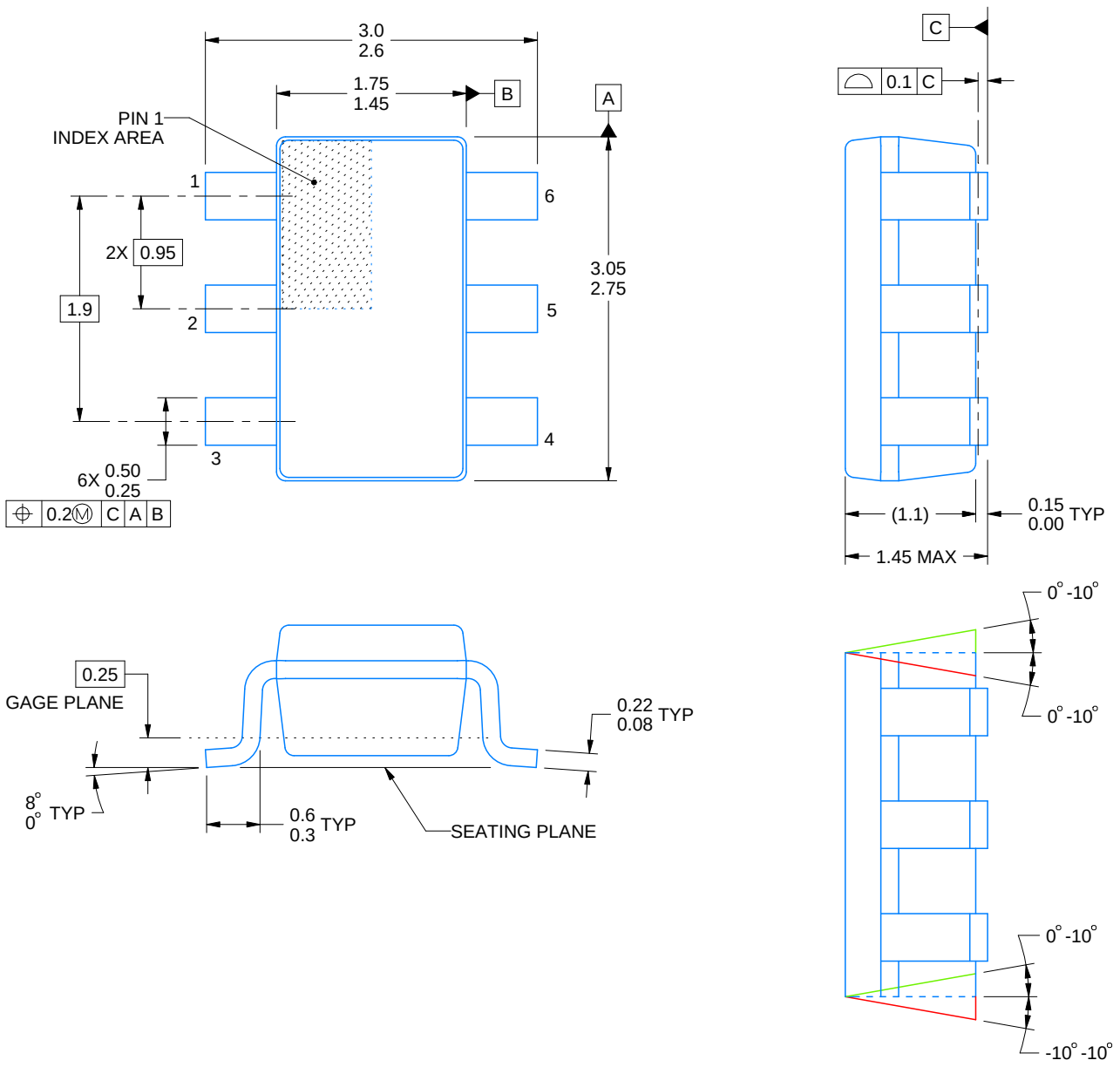

ALTERNATIVE PACKAGE SINGULATION VIEW

4214840/D 09/2023

NOTES:

1. All linear dimensions are in millimeters. Any dimensions in parenthesis are for reference only. Dimensioning and tolerancing per ASME Y14.5M.
2. This drawing is subject to change without notice.
3. Body dimensions do not include mold flash or protrusion. Mold flash and protrusion shall not exceed 0.25 per side.
4. Leads 1,2,3 may be wider than leads 4,5,6 for package orientation.
5. Refernce JEDEC MO-178.

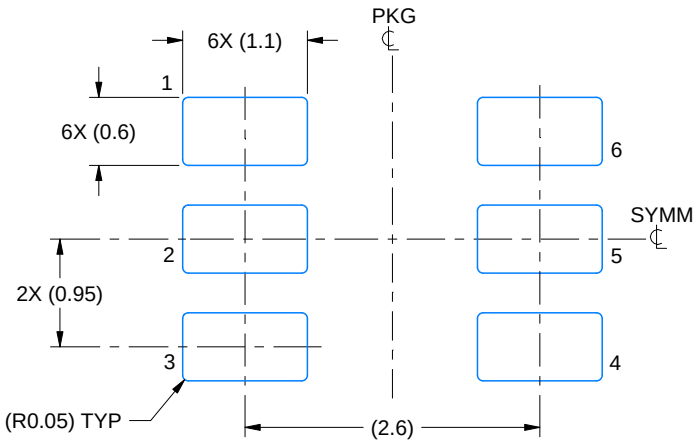

LAND PATTERN EXAMPLE
EXPOSED METAL SHOWN
SCALE:15X

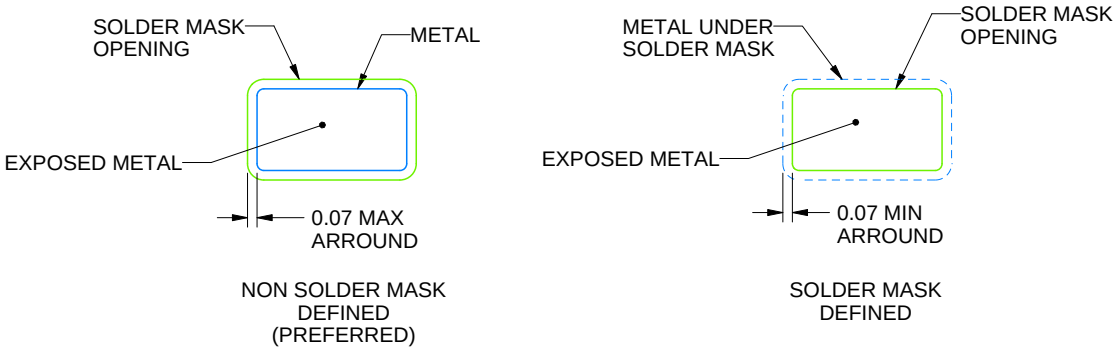

SOLDER MASK DETAILS

4214840/D 09/2023

NOTES: (continued)

6. Publication IPC-7351 may have alternate designs.
7. Solder mask tolerances between and around signal pads can vary based on board fabrication site.

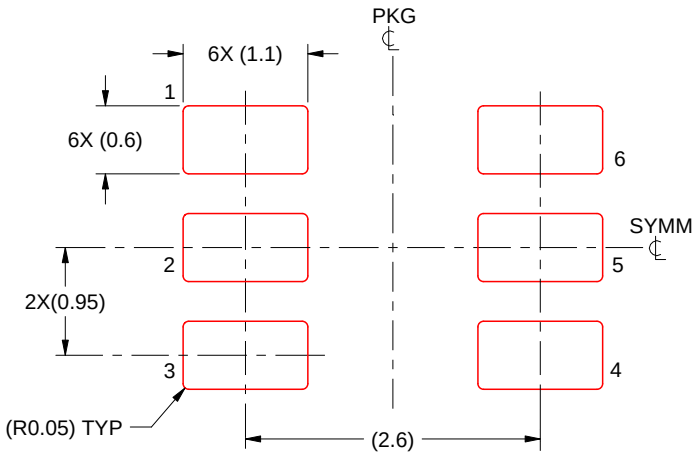

SOLDER PASTE EXAMPLE
BASED ON 0.125 mm THICK STENCIL
SCALE:15X

4214840/D 09/2023

NOTES: (continued)

8. Laser cutting apertures with trapezoidal walls and rounded corners may offer better paste release. IPC-7525 may have alternate design recommendations.
9. Board assembly site may have different recommendations for stencil design.

IMPORTANT NOTICE AND DISCLAIMER

TI PROVIDES TECHNICAL AND RELIABILITY DATA (INCLUDING DATA SHEETS), DESIGN RESOURCES (INCLUDING REFERENCE DESIGNS), APPLICATION OR OTHER DESIGN ADVICE, WEB TOOLS, SAFETY INFORMATION, AND OTHER RESOURCES “AS IS” AND WITH ALL FAULTS, AND DISCLAIMS ALL WARRANTIES, EXPRESS AND IMPLIED, INCLUDING WITHOUT LIMITATION ANY IMPLIED WARRANTIES OF MERCHANTABILITY, FITNESS FOR A PARTICULAR PURPOSE OR NON-INFRINGEMENT OF THIRD PARTY INTELLECTUAL PROPERTY RIGHTS.

These resources are intended for skilled developers designing with TI products. You are solely responsible for (1) selecting the appropriate TI products for your application, (2) designing, validating and testing your application, and (3) ensuring your application meets applicable standards, and any other safety, security, regulatory or other requirements.

These resources are subject to change without notice. TI grants you permission to use these resources only for development of an application that uses the TI products described in the resource. Other reproduction and display of these resources is prohibited. No license is granted to any other TI intellectual property right or to any third party intellectual property right. TI disclaims responsibility for, and you will fully indemnify TI and its representatives against, any claims, damages, costs, losses, and liabilities arising out of your use of these resources.

TI’s products are provided subject to TI’s Terms of Sale or other applicable terms available either on ti.com or provided in conjunction with such TI products. TI’s provision of these resources does not expand or otherwise alter TI’s applicable warranties or warranty disclaimers for TI products.

TI objects to and rejects any additional or different terms you may have proposed.

Mailing Address: Texas Instruments, Post Office Box 655303, Dallas, Texas 75265
Copyright © 2023, Texas Instruments Incorporated