



2.75-W FIXED GAIN MONO FILTER-FREE CLASS-D AUDIO POWER AMPLIFIER

FEATURES

- **Maximize Battery Life and Minimize Heat**
  - **0.5-μA Shutdown Current**
  - **3.0-mA Quiescent Current**
  - **High Efficiency Class-D**
    - **88% at 400mW at 8Ω**
    - **80% at 100mW at 8Ω**
- **Three Fixed Gain Versions**
  - **TPA2032D1 has a gain of 2 V/V (6dB)**
  - **TPA2033D1 has a gain of 3 V/V (9.5dB)**
  - **TPA2034D1 has a gain of 4 V/V (12dB)**
- **Only One External Component Required**
  - **Internal Matched Input Gain and Feedback Resistors for Excellent PSRR and CMRR**
  - **Optimized PWM Output Stage Eliminates LC Output Filter**
  - **PSRR (–75 dB) and Wide Supply Voltage (2.5 V to 5.5 V) Eliminates Need for a Dedicated Voltage Regulator**
  - **Fully Differential Design Reduces RF Rectification and Eliminates Bypass Capacitor**
  - **CMRR (–69 dB)Eliminates Two Input Coupling Capacitors**
- **Thermal and Short-Circuit Protection**
- **Pinout Very Similar to TPA2010D1**
- **Wafer Chip Scale Packaging (WCSP)**
- **– NanoFree™ Lead-Free (Pb-Free: YZF)**

APPLICATIONS

- **Ideal for Wireless Handsets, PDAs, and other mobile devices**

DESCRIPTION

The TPA2032D1 (2V/V gain), TPA2033D1 (3V/V gain), and TPA2034D1 (4V/V gain) are 2.75-W high efficiency filter-free class-D audio power amplifiers, each in an approximately 1.5-mm × 1.5-mm wafer chip scale package (WCSP) that requires only one external component. The pinout is the same as the TPA2010D1 except that the external gain setting input resistors required by the TPA2010D1 are integrated into the fixed gain TPA203xD1 family.

Features like –75dB PSRR and improved RF-rectification immunity with a very small PCB footprint (WCSP amplifier plus single decoupling cap) make the TPA203xD1 family ideal for wireless handsets. A fast start-up time of 3.2 ms with minimal pop makes the TPA203xD1 family ideal for PDA applications.

In wireless handsets, the earpiece, speaker phone, and melody ringer can each be driven by a TPA203xD1. The TPA203xD1 family has a low 27-μV noise floor, A-weighted.

APPLICATION CIRCUIT

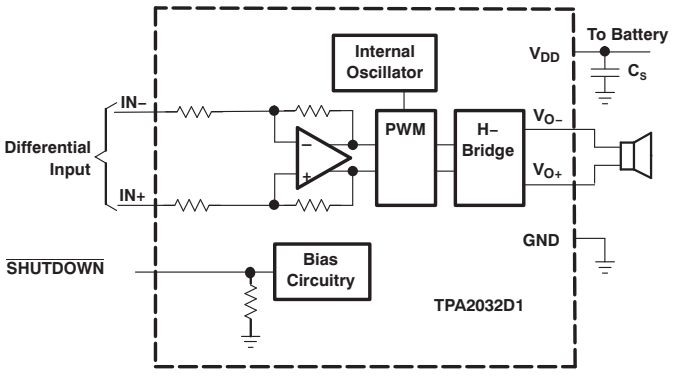

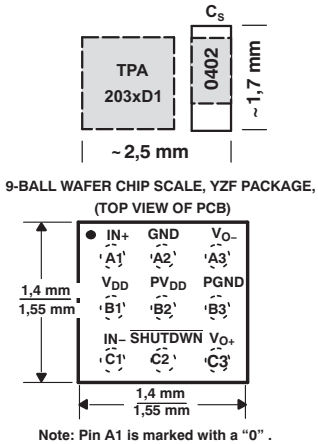

Please be aware that an important notice concerning availability, standard warranty, and use in critical applications of Texas Instruments semiconductor products and disclaimers thereto appears at the end of this data sheet.

NanoFree is a trademark of Texas Instruments.

PRODUCTION DATA information is current as of publication date. Products conform to specifications per the terms of the Texas Instruments standard warranty. Production processing does not necessarily include testing of all parameters.

Copyright © 2006, Texas Instruments Incorporated

These devices have limited built-in ESD protection. The leads should be shorted together or the device placed in conductive foam during storage or handling to prevent electrostatic damage to the MOS gates.

ORDERING INFORMATION

T_A	PACKAGE	PART NUMBER	SYMBOL
–40°C to 85°C	Wafer chip scale packaging – Lead free (YZF)	TPA2032D1YZF (1)	BPX
–40°C to 85°C	Wafer chip scale packaging – Lead free (YZF)	TPA2033D1YZF (1)	BPY
–40°C to 85°C	Wafer chip scale packaging – Lead free (YZF)	TPA2034D1YZF (1)	BPZ

(1) The YZF package is only available taped and reeled. To order add the suffix *R* to the end of the part number for a reel of 3000, or add the suffix *T* to the end of the part number for a reel of 250 (e.g. TPA2032D1YZFR).

ABSOLUTE MAXIMUM RATINGS

over operating free-air temperature range unless otherwise noted(1)

			TPA2032D1, TPA2033D1, TPA2034D1
V_{DD}	Supply voltage	In active mode	–0.3 V to 6 V
		In $\overline{\text{SHUTDOWN}}$ mode	–0.3 V to 7 V
V_I	Input voltage		–0.3 V to V_{DD} + 0.3 V
	Continuous total power dissipation		See Dissipation Rating Table
T_A	Operating free-air temperature		–40°C to 85°C
T_J	Operating junction temperature		–40°C to 125°C
T_{stg}	Storage temperature		–65°C to 150°C
ESD	Electro-Static Discharge Tolerance - Human Body Model (HBM) for all pins(2)		2KV

(1) Stresses beyond those listed under *absolute maximum ratings* may cause permanent damage to the device. These are stress ratings only, and functional operation of the device at these or any other conditions beyond those indicated under *recommended operating conditions* is not implied. Exposure to absolute-maximum-rated conditions for extended periods may affect device reliability.
(2) The output pins Vo– and Vo+ are tolerant to 1.5KV HBM ESD

RECOMMENDED OPERATING CONDITIONS

			MIN	NOM	MAX	UNIT
V_{DD}	Supply voltage		2.5		5.5	V
V_{IH}	High-level input voltage	$\overline{\text{SHUTDOWN}}$	1.3		V_{DD}	V
V_{IL}	Low-level input voltage	$\overline{\text{SHUTDOWN}}$	0		0.35	V
V_{IC}	Common mode input voltage range	V_{DD} = 2.5 V, 5.5 V	0.5		V_{DD}–0.8	V
T_A	Operating free-air temperature		–40		85	°C

PACKAGE DISSIPATION RATINGS

PACKAGE	DERATING FACTOR ($1 / \theta_{JA}$)	$T_A \leq 25°C$ POWER RATING	$T_A = 70°C$ POWER RATING	$T_A = 85°C$ POWER RATING
YZF	4.8 mW/°C(1)	480 mW	264 mW	192 mW
YZF	7.5 mW/°C(2)	750 mW	412 mW	300 mW

(1) Derating factor measured with JEDEC Low-K board; 1S0P - One signal layer and zero plane layers.
(2) Derating factor measured with JEDEC High K board; 1S2P - One signal layer and two plane layers.
Please see JEDEC Standard 51-3 for Low-K board, JEDEC Standard 51-7 for High-K board, and JEDEC Standard 51-12 for using package thermal information.
Please see JEDEC document page for downloadable copies: http://www.jedec.org/download/default.cfm.

ELECTRICAL CHARACTERISTICS

T_A = 25°C (unless otherwise noted)

PARAMETER		TEST CONDITIONS		MIN	TYP	MAX	UNIT
$\|V_{OS}\|$	Output offset voltage (measured differentially)	Inputs AC grounded, V_{DD} = 2.5 V to 5.5 V	TPA2032D1		5	25	mV
			TPA2033D1		5	25	
			TPA2034D1		5	25	
PSRR	Power supply rejection ratio	V_{DD} = 2.5 V to 5.5 V			–75	-61	dB
CMRR	Common mode rejection ratio	V_{IC} = 0.5 V to (V_{DD} –0.8 V)	V_{DD} = 2.5 V		–69	-52	dB
			V_{DD} = 3.6 V		– 69	-52	
			V_{DD} = 5.5 V		–69	-52	
$\|I_{IH}\|$	High-level input current	V_{DD} = 5.5 V, V_I = 5.8 V				50	µA
$\|I_{IL}\|$	Low-level input current	V_{DD} = 5.5 V, V_I = –0.3 V				5	µA
$I_{(Q)}$	Quiescent current	V_{DD} = 5.5 V, no load			4	5.7	mA
		V_{DD} = 3.6 V, no load			3		
		V_{DD} = 2.5 V, no load			2.2	3.7	
$I_{(SD)}$	Shutdown current	$V_{\overline{(SHUTDOWN)}}$= 0.35 V, V_{DD} = 2.5 V to 5.5 V			0.5	0.8	µA
$r_{DS(on)}$	Static drain-source on-state resistance	V_{DD} = 2.5 V			550		mΩ
		V_{DD} = 3.6 V			420		
		V_{DD} = 5.0 V			350		
	Output impedance in $\overline{SHUTDOWN}$	$V_{\overline{(SHUTDOWN)}}$ <= 0.35 V			2		kΩ
$f_{(sw)}$	Switching frequency	V_{DD} = 2.5 V to 5.5 V		240	300	400	kHz
Gain		V_{DD} = 2.5 V to 5.5 V	TPA2032D1	5.5	6	6.5	dB
			TPA2033D1	9.0	9.5	10.0	
			TPA2034D1	11.5	12	12.5	
R_{PD}	Resistance of internal pulldown resistor from shutdown pin to GND				300		kΩ

OPERATING CHARACTERISTICS

T_A = 25°C, R_L = 8 Ω (unless otherwise noted)

PARAMETER		TEST CONDITIONS		MIN	TYP	MAX	UNIT
P_O	Output power	R_L = 4 Ω, THD + N = 10%, f = 1 kHz	V_{DD} = 5 V		2.75		W
			V_{DD} = 3.6 V		1.35		
			V_{DD} = 2.5 V		0.59		
		R_L = 4 Ω, THD + N = 1%, f = 1 kHz	V_{DD} = 5 V		2.25		W
			V_{DD} = 3.6 V		1.12		
			V_{DD} = 2.5 V		0.48		
		R_L = 8 Ω, THD + N = 10%, f = 1 kHz	V_{DD} = 5 V		1.68		W
			V_{DD} = 3.6 V		0.85		
			V_{DD} = 2.5 V		0.38		
		R_L = 8 Ω, THD + N = 1%, f = 1 kHz	V_{DD} = 5 V		1.37		W
			V_{DD} = 3.6 V		0.68		
			V_{DD} = 2.5 V		0.31		
THD+ N	Total harmonic distortion plus noise	V_{DD} = 5 V, P_O = 1 W, R_L = 8 Ω, f = 1 kHz			0.18%		
		V_{DD} = 3.6 V, P_O = 0.5 W, R_L = 8 Ω, f = 1 kHz			0.11%		
		V_{DD} = 2.5 V, P_O = 200 mW, R_L = 8 Ω, f = 1 kHz			0.10%		
k_{SVR}	Supply ripple rejection ratio	V_{DD} = 3.6 V, Inputs AC grounded with C_I = 1 µF	f = 217 Hz, $V_{(RIPPLE)}$ = 200 mV_{pp}		–73		dB
SNR	Signal-to-noise ratio	V_{DD} = 5 V, P_O = 1 W, R_L = 8 Ω, A weighted noise			100		dB

OPERATING CHARACTERISTICS (continued)

T_A = 25°C, R_L = 8 Ω (unless otherwise noted)

PARAMETER		TEST CONDITIONS		MIN	TYP	MAX	UNIT
V_n	Output voltage noise	V_{DD} = 3.6 V, f = 20 Hz to 20 kHz, Inputs AC grounded with C_i = 1 µF	No weighting		35		μV_{RMS}
			A weighting		27		
CMRR	Common mode rejection ratio	V_{DD} = 3.6 V, V_{IC} = 1.0 V_{pp} , V_{Cm} = 1.8 V	f = 217 Hz		–69		dB
R_I	Input impedance	A_V = 2 V/V			30.2		kΩ
		A_V = 3 V/V			22.8		
		A_V = 4 V/V			18.5		
	Start-up time from shutdown	V_{DD} = 3.6 V			3.2		ms

Terminal Functions

TERMINAL		I/O	DESCRIPTION
NAME	YZF		
IN–	C1	I	Negative differential audio input
IN+	A1	I	Positive differential audio input
V_{O-}	A3	O	Negative BTL audio output
V_{O+}	C3	O	Positive BTL audio output
GND	A2	I	Analog ground terminal. Must be connected to same potential as PGND using a direct connection to a single point ground.
PGND	B3		High-current Analog ground terminal. Must be connected to same potential as GND using a direct connection to a single point ground.
V_{DD}	B1	I	Power supply terminal. Must be connected to same power supply as PV_{DD} using a direct connection. Voltage must be within values listed in Recommended Operating Conditions table.
PV_{DD}	B2	I	High-current Power supply terminal. Must be connected to same power supply as V_{DD} using a direct connection. Voltage must be within values listed in Recommended Operating Conditions table.
$\overline{\text{SHUTDOWN}}$	C2	I	Shutdown terminal. When terminal is low the device is put into Shutdown mode.

FUNCTIONAL BLOCK DIAGRAM

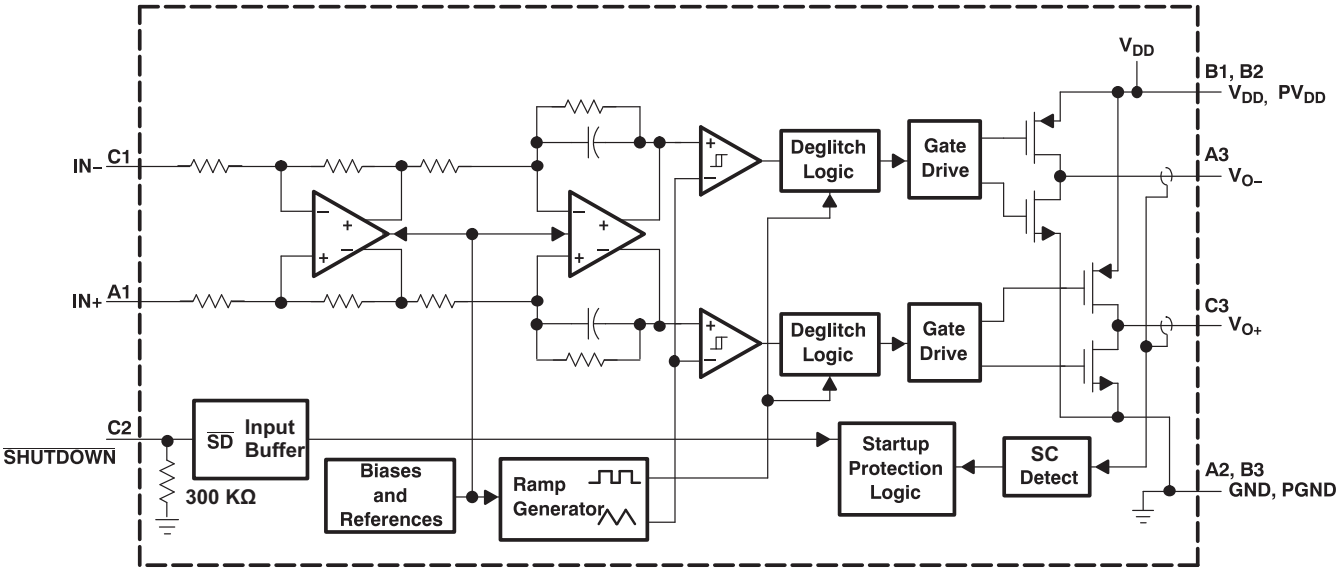

TYPICAL CHARACTERISTICS

TABLE OF GRAPHS

			FIGURE
	Efficiency	vs Output power	1, 2
P_D	Power dissipation	vs Output power	3, 4
	Supply current	vs Output power	5, 6
I_{DD}	Supply current	vs Supply voltage	7
$I_{(SD)}$	Shutdown current	vs Shutdown voltage	8
P_O	Output power	vs Load resistance	9, 10
		vs Supply voltage	11
THD+N	Total harmonic distortion plus noise	vs Output power	12, 13
		vs Frequency	14, 15, 16, 17
		vs Common-mode input voltage	18
K_{SVR}	Supply voltage rejection ratio	vs Frequency	19, 20, 21, 22, 23, 24, 25, 26, 27
	GSM power supply rejection	vs Time	28
		vs Frequency	29
K_{SVR}	Supply voltage rejection ratio	vs Common-mode input voltage	30, 31, 32
CMRR	Common-mode rejection ratio	vs Frequency	33
		vs Common-mode input voltage	34

TEST SET-UP FOR GRAPHS

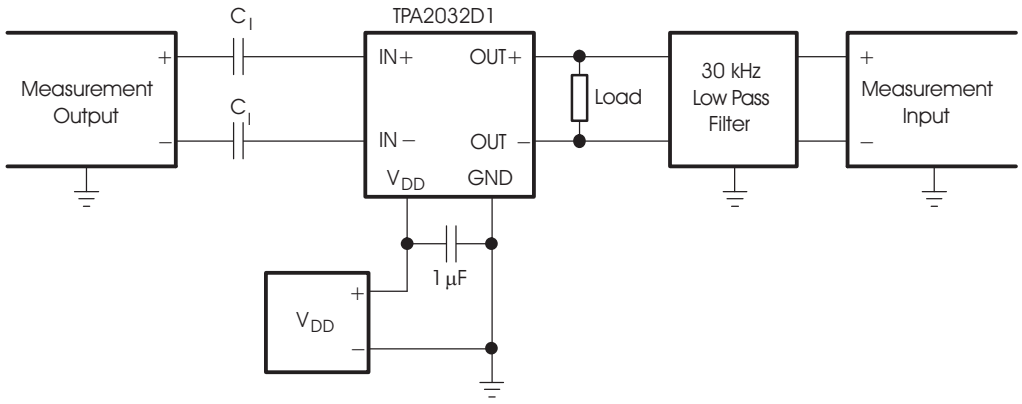

(1) C_I was shorted for any common-mode input voltage measurement. All other measurements were taken with a 1-µF C_I (unless otherwise noted).

(2) A 33-µH inductor was placed in series with the load resistor to emulate a small speaker for efficiency measurements.

(3) The 30-kHz low-pass filter is required, even if the analyzer has an internal low-pass filter. An RC low-pass filter (100Ω, 47-nF) is used on each output for the data sheet graphs.

EFFICIENCY vs OUTPUT POWER

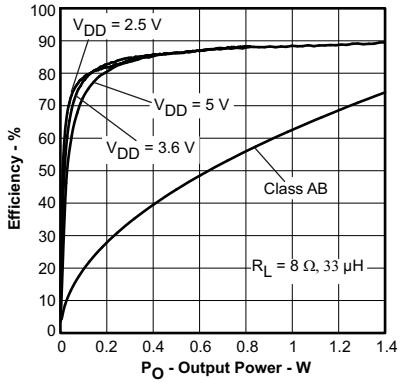

Figure 1.

EFFICIENCY vs OUTPUT POWER

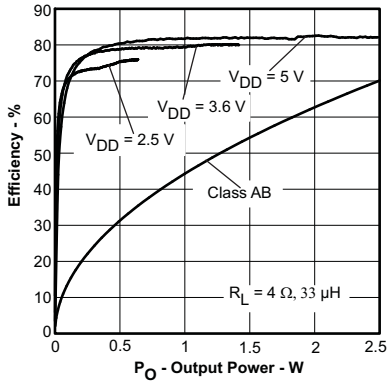

Figure 2.

POWER DISSIPATION vs OUTPUT POWER

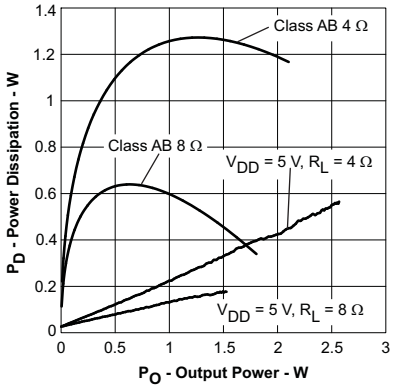

Figure 3.

POWER DISSIPATION vs OUTPUT POWER

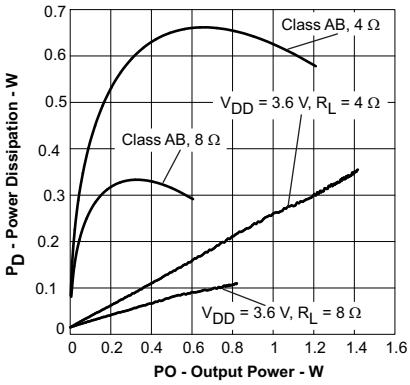

Figure 4.

SUPPLY CURRENT vs OUTPUT POWER

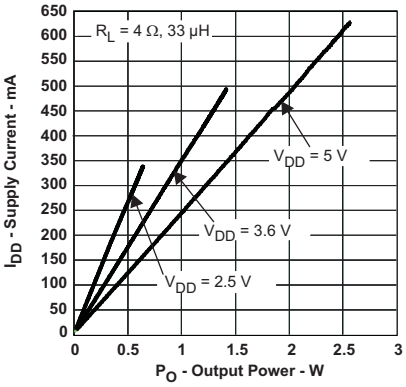

Figure 5.

SUPPLY CURRENT vs OUTPUT POWER

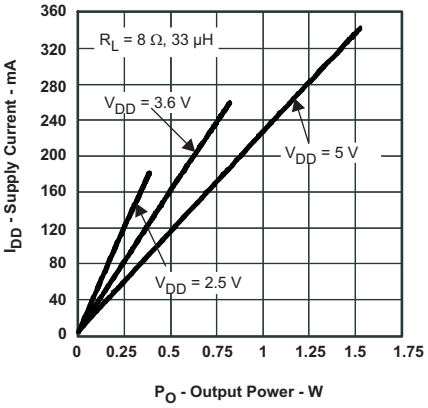

Figure 6.

SUPPLY CURRENT vs SUPPLY VOLTAGE

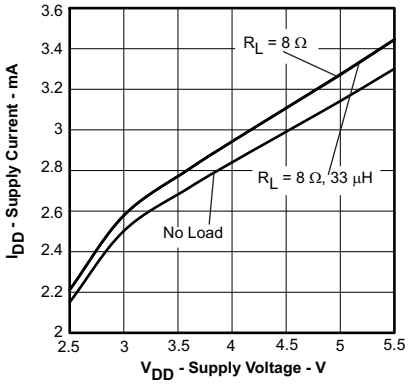

Figure 7.

SHUTDOWN CURRENT vs SHUTDOWN VOLTAGE

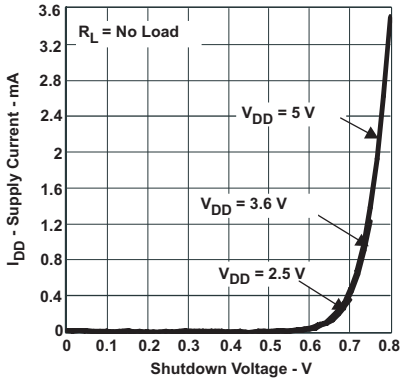

Figure 8.

OUTPUT POWER vs LOAD RESISTANCE

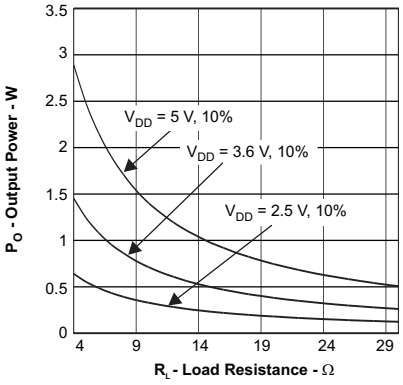

Figure 9.

OUTPUT POWER vs LOAD RESISTANCE

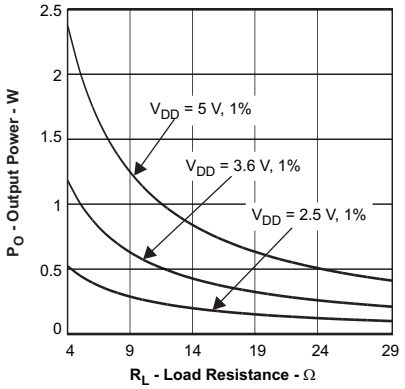

Figure 10.

OUTPUT POWER vs SUPPLY VOLTAGE

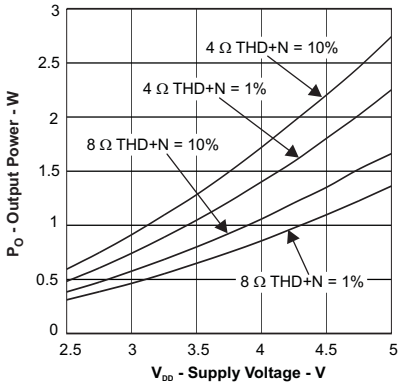

Figure 11.

TOTAL HARMONIC DISTORTION + NOISE vs OUTPUT POWER

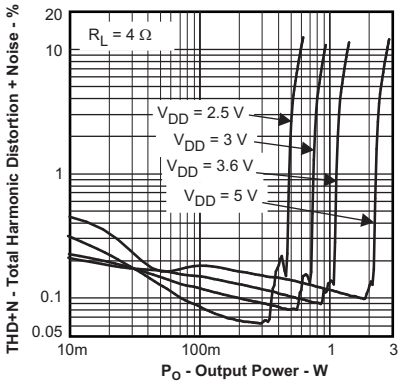

Figure 12.

TOTAL HARMONIC DISTORTION + NOISE vs OUTPUT POWER

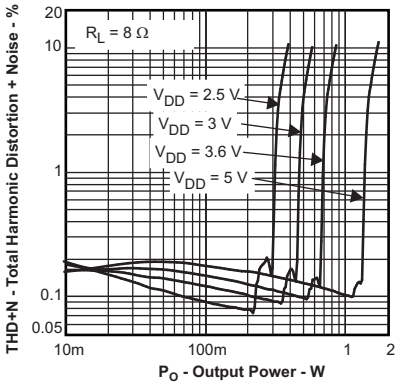

Figure 13.

TOTAL HARMONIC DISTORTION + NOISE vs FREQUENCY

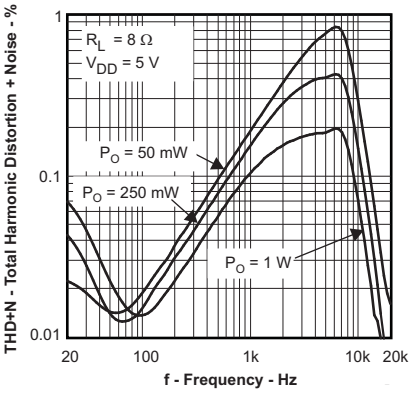

Figure 14.

TOTAL HARMONIC DISTORTION + NOISE vs FREQUENCY

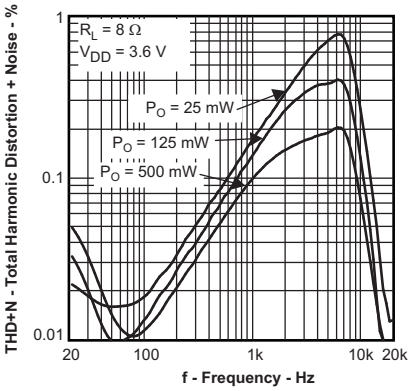

Figure 15.

TOTAL HARMONIC DISTORTION + NOISE vs FREQUENCY

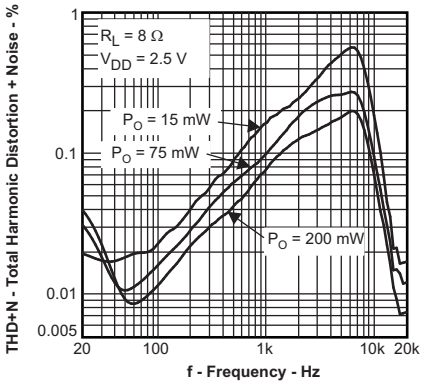

Figure 16.

TOTAL HARMONIC DISTORTION + NOISE vs FREQUENCY

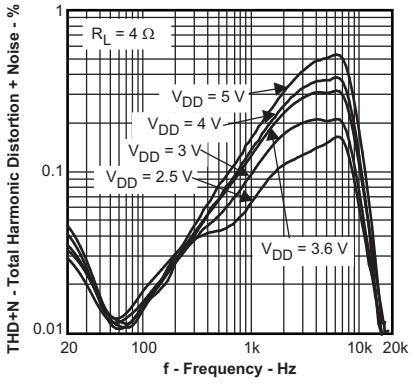

Figure 17.

TOTAL HARMONIC DISTORTION + NOISE vs COMMON MODE INPUT VOLTAGE

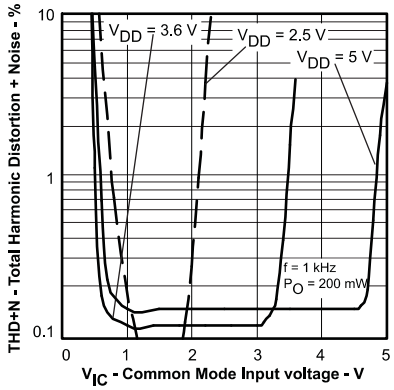

Figure 18.

SUPPLY RIPPLE REJECTION RATIO vs FREQUENCY - TPA2032D1

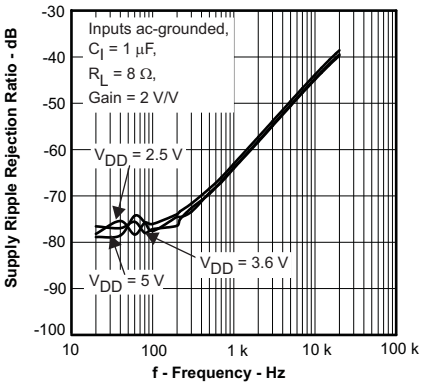

Figure 19.

SUPPLY RIPPLE REJECTION RATIO vs FREQUENCY - TPA2033D1

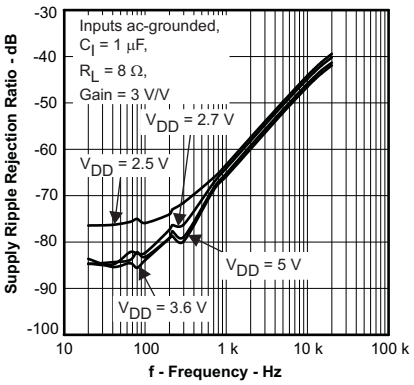

Figure 20.

SUPPLY RIPPLE REJECTION RATIO vs FREQUENCY - TPA2034D1

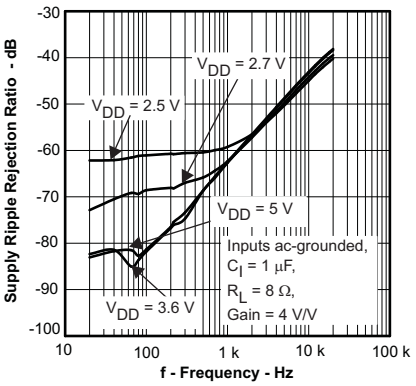

Figure 21.

SUPPLY RIPPLE REJECTION RATIO vs FREQUENCY- TPA2032D1

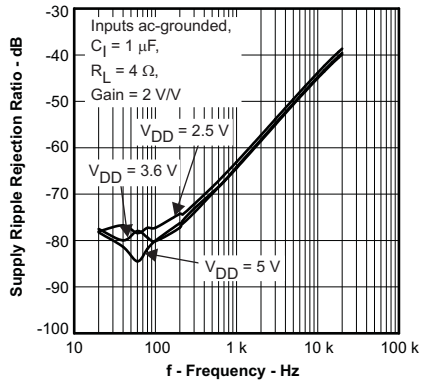

Figure 22.

SUPPLY RIPPLE REJECTION RATIO vs FREQUENCY- TPA2033D1

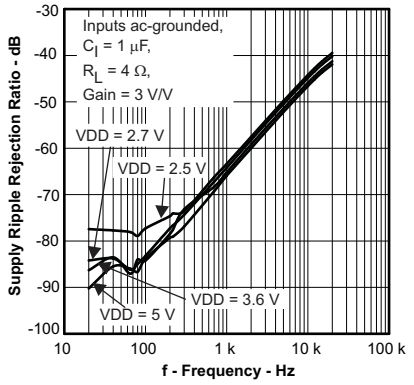

Figure 23.

SUPPLY RIPPLE REJECTION RATIO vs FREQUENCY- TPA2034D1

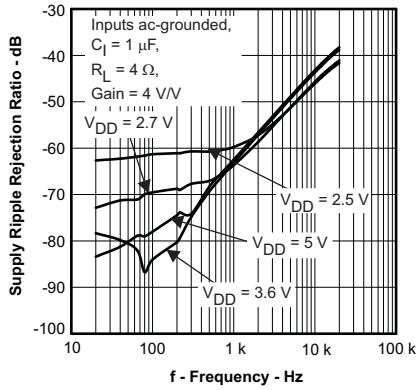

Figure 24.

SUPPLY RIPPLE REJECTION RATIO vs FREQUENCY - TPA2032D1

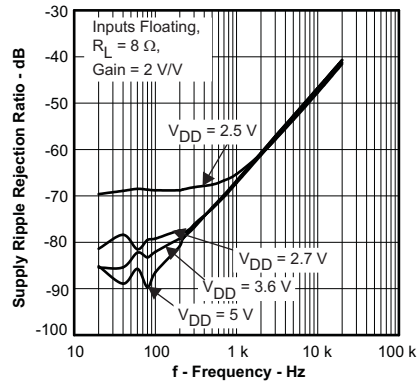

Figure 25.

SUPPLY RIPPLE REJECTION RATIO vs FREQUENCY - TPA2033D1

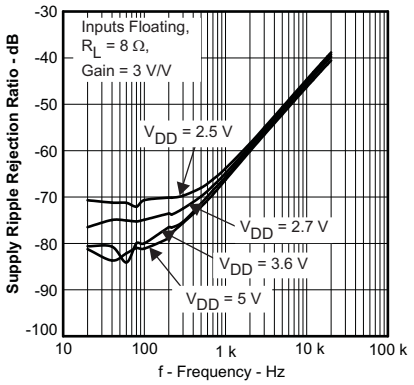

Figure 26.

SUPPLY RIPPLE REJECTION RATIO vs FREQUENCY - TPA2034D1

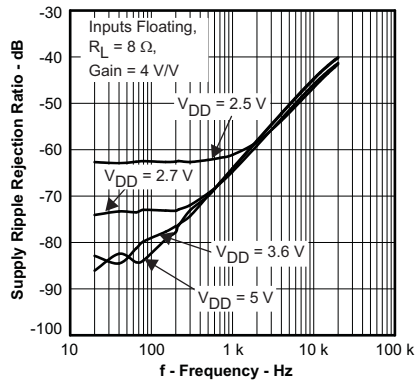

Figure 27.

GSM POWER SUPPLY REJECTION vs TIME

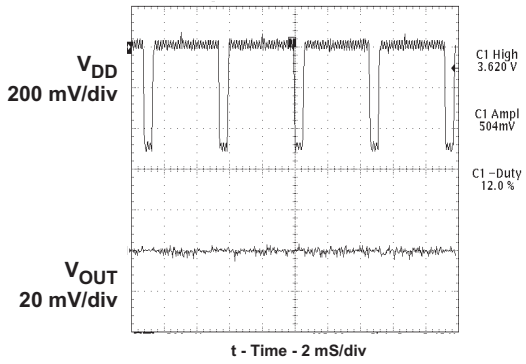

Figure 28.

GSM POWER SUPPLY REJECTION vs FREQUENCY

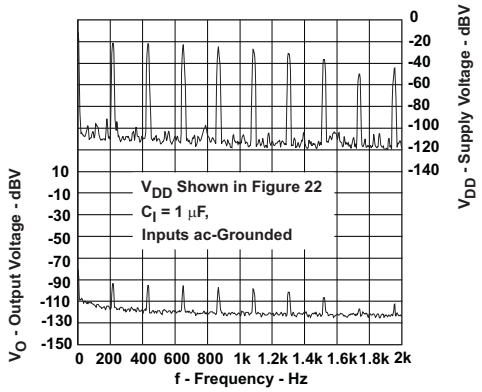

Figure 29.

SUPPLY RIPPLE REJECTION RATIO vs DC COMMON MODE VOLTAGE - TPA2032D1

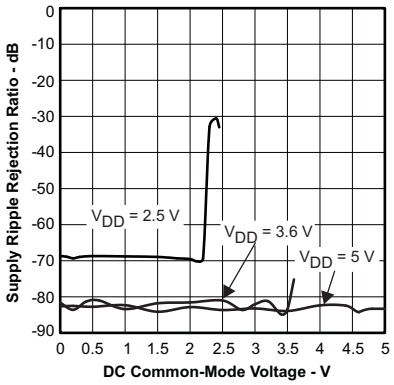

Figure 30.

SUPPLY RIPPLE REJECTION RATIO vs DC COMMON MODE VOLTAGE - TPA2033D1

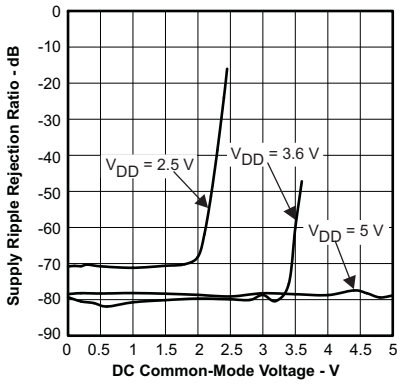

Figure 31.

SUPPLY RIPPLE REJECTION RATIO vs DC COMMON MODE VOLTAGE - TPA2034D1

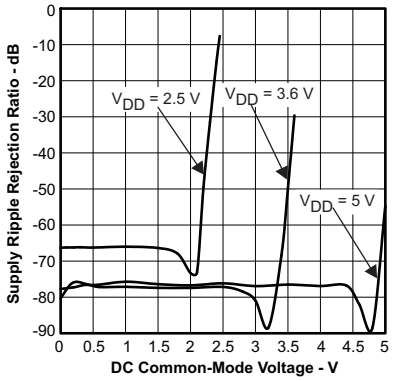

Figure 32.

COMMON-MODE REJECTION RATIO vs FREQUENCY

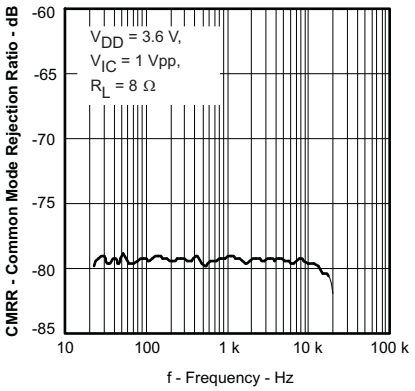

Figure 33.

COMMON-MODE REJECTION RATIO vs COMMON-MODE INPUT VOLTAGE

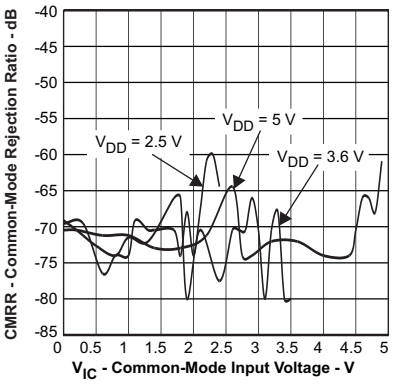

Figure 34.

APPLICATION INFORMATION

FULLY DIFFERENTIAL AMPLIFIER

The TPA2032D1 is a fully differential amplifier with differential inputs and outputs. The fully differential amplifier consists of a differential amplifier and a common-mode amplifier. The differential amplifier ensures that the amplifier outputs a differential voltage on the output that is equal to the differential input times the gain. The common-mode feedback ensures that the common-mode voltage at the output is biased around $V_{DD}/2$ regardless of the common-mode voltage at the input. The fully differential TPA2032D1 can still be used with a single-ended input; however, the TPA2032D1 should be used with differential inputs when in a noisy environment, like a wireless handset, to ensure maximum noise rejection.

Advantages of Fully Differential Amplifiers

- Input-coupling capacitors not required:
  - The fully differential amplifier allows the inputs to be biased at voltage other than mid-supply. The inputs of the TPA2032D1 can be biased anywhere within the common mode input voltage range listed in the Recommended Operating Conditions table. If the inputs are biased outside of that range, input-coupling capacitors are required.
- Midsupply bypass capacitor, $C_{(BYPASS)}$, not required:
  - The fully differential amplifier does not require a bypass capacitor. Any shift in the midsupply affects both positive and negative channels equally and cancels at the differential output.
- Better RF-immunity:
  - GSM handsets save power by turning on and shutting off the RF transmitter at a rate of 217 Hz. The transmitted signal is picked-up on input and output traces. The fully differential amplifier cancels the signal better than the typical audio amplifier.

COMPONENT SELECTION

Figure 35 shows the TPA2032D1 typical schematic with differential inputs, while Figure 36 shows the TPA2032D1 with differential inputs and input capacitors. Figure 37 shows the TPA2032D1 with a single-ended input.

Decoupling Capacitor (C_S)

The TPA2032D1 is a high-performance class-D audio amplifier that requires adequate power supply decoupling to ensure the efficiency is high and total harmonic distortion (THD) is low. For higher frequency transients, spikes, or digital hash on the line, a good low equivalent-series-resistance (ESR) ceramic capacitor, typically 1µF, placed as close as possible to the device V_{DD} lead works best. Placing this decoupling capacitor close to the TPA2032D1 is very important for the efficiency of the class-D amplifier, because any resistance or inductance in the trace between the device and the capacitor can cause a loss in efficiency. For filtering lower-frequency noise signals, a 10 µF or greater capacitor placed near the audio power amplifier would also help, but it is not required in most applications because of the high PSRR of this device. Typically, the smaller the capacitor's case size, the lower the inductance and the closer it can be placed to the TPA2032D1.

Input Capacitors (C_I)

The TPA2032D1 does not require input coupling capacitors if the design uses a differential source that is biased within the common-mode input voltage range. That voltage range is listed in the Recommended Operating Conditions table. If the input signal is not biased within the recommended common-mode input range, such as in needing to use the input as a high pass filter, shown in Figure 36, or if using a single-ended source, shown in Figure 37, input coupling capacitors are required. The same value capacitors should be used on both IN+ and IN– for best pop performance.

$$f_c = \frac{1}{\left(2\pi R_I C_I\right)} \quad (1)$$

The value of the input capacitor is important to consider as it directly affects the bass (low frequency) performance of the circuit. Speaker response may also be taken into consideration when setting the corner frequency using input capacitors.

APPLICATION INFORMATION (continued)

Equation 2 is reconfigured to solve for the input coupling capacitance.

$$C_I = \frac{1}{\left(2\pi R_I f_C\right)} \quad (2)$$

If the corner frequency is within the audio band, the capacitors should have a tolerance of ±10% or better, because any mismatch in capacitance causes an impedance mismatch at the corner frequency and below.

For a flat low-frequency response, use large input coupling capacitors (1 µF or larger).

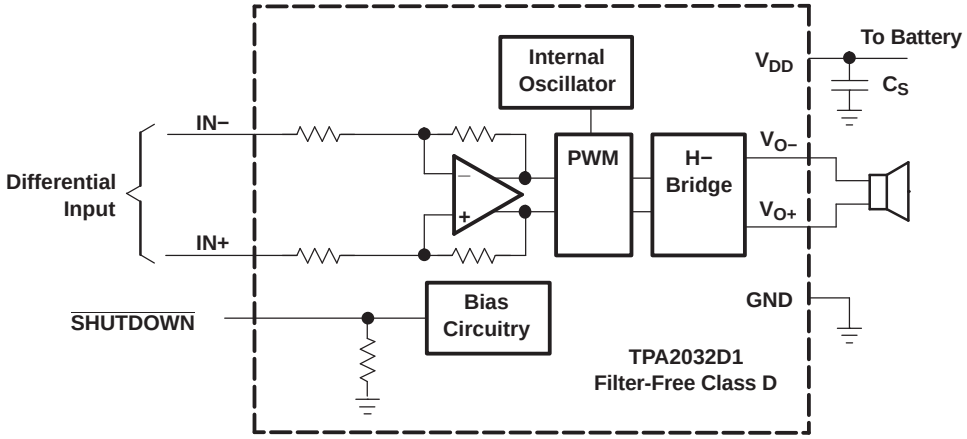

Figure 35. Typical TPA2032D1 Application Schematic With Differential Input for a Wireless Phone

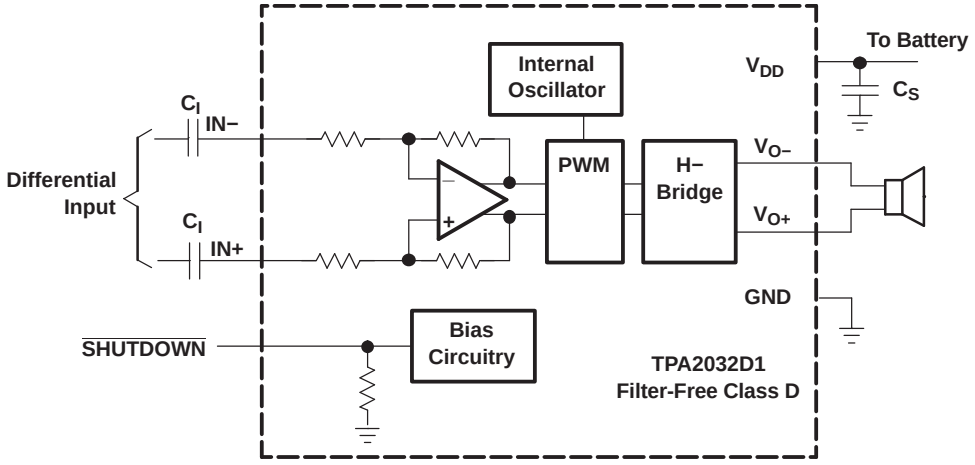

Figure 36. TPA2032D1 Application Schematic With Differential Input and Input Capacitors

APPLICATION INFORMATION (continued)

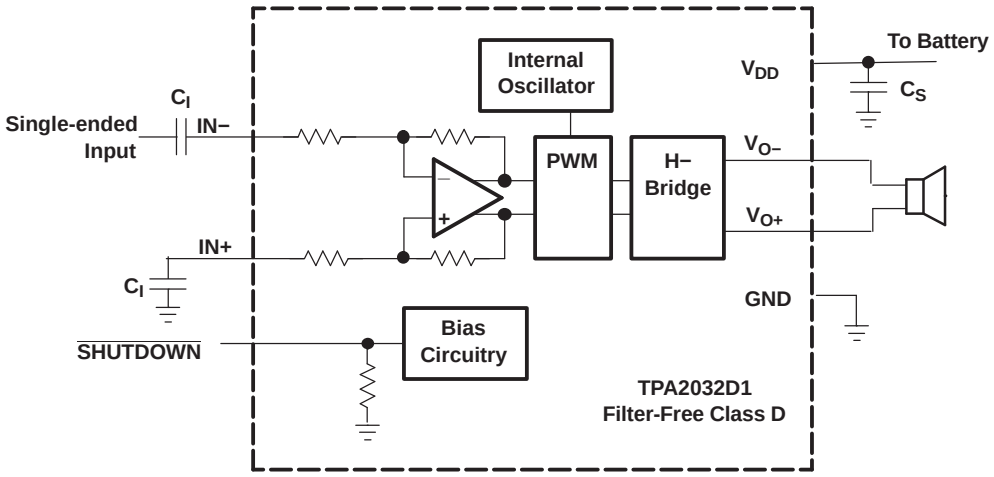

Figure 37. TPA2032D1 Application Schematic With Single-Ended Input

BOARD LAYOUT

In making the pad size for the WCSP balls, it is recommended that the layout use nonsolder mask defined (NSMD) land. With this method, the solder mask opening is made larger than the desired land area, and the opening size is defined by the copper pad width. Figure 38 and Table 1 show the appropriate diameters for a WCSP layout. The TPA2032D1 evaluation module (EVM) layout is shown in the next section as a layout example.

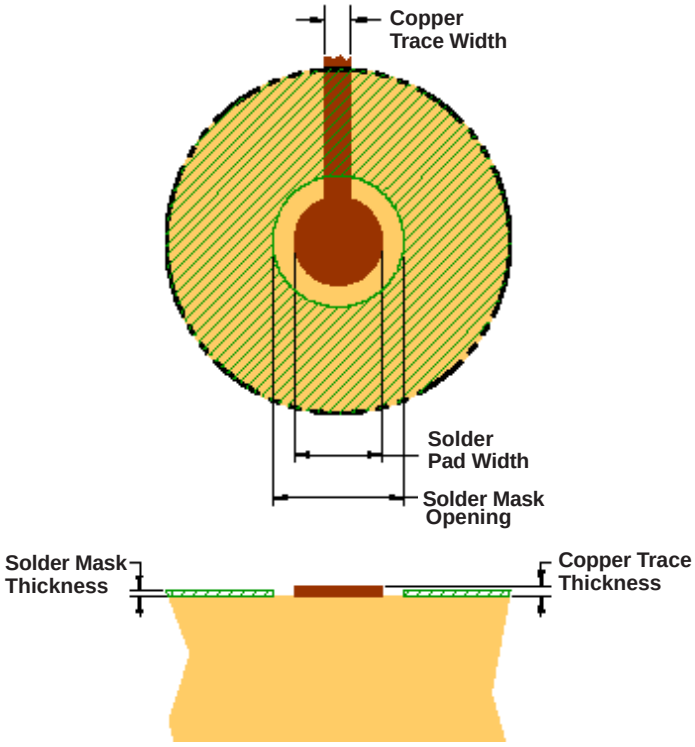

Figure 38. Land Pattern Dimensions

APPLICATION INFORMATION (continued)

Table 1. Land Pattern Dimensions

SOLDER PAD DEFINITIONS	COPPER PAD	SOLDER MASK OPENING	COPPER THICKNESS	STENCIL OPENING	STENCIL THICKNESS
Nonsolder mask defined (NSMD)	275 µm (+0.0, –25 µm)	375 µm (+0.0, –25 µm)	1 oz max (32 µm)	275 µm x 275 µm Sq. (rounded corners)	125 µm thick

NOTES:

1. Circuit traces from NSMD defined PWB lands should be 75 µm to 100 µm wide in the exposed area inside the solder mask opening. Wider trace widths reduce device stand off and impact reliability.
2. Recommended solder paste is Type 3 or Type 4.
3. Best reliability results are achieved when the PWB laminate glass transition temperature is above the operating range of the intended application.
4. For a PWB using a Ni/Au surface finish, the gold thickness should be less 0.5 µm to avoid a reduction in thermal fatigue performance.
5. Solder mask thickness should be less than 20 µm on top of the copper circuit pattern.
6. Best solder stencil performance is achieved using laser-cut stencils with electro polishing. Use of chemically etched stencils results in inferior solder paste volume control.
7. Trace routing away from WCSP device should be balanced in X and Y directions to avoid unintentional component movement due to solder wetting forces.

Component Location

Place all the external components very close to the TPA2032D1. Placing the decoupling capacitor, C_S, close to the TPA2032D1 is important for the efficiency of the class-D amplifier. Any resistance or inductance in the trace between the device and the capacitor can cause a loss in efficiency.

Trace Width

Recommended trace width at the solder balls is 75 µm to 100 µm to prevent solder wicking onto wider PCB traces. Figure 39 shows the layout of the TPA2032D1 evaluation module (EVM).

For high current pins (V_{DD}, GND V_{O+}, and V_{O-}) of the TPA2032D1, use 100-µm trace widths at the solder balls and at least 500-µm PCB traces to ensure proper performance and output power for the device.

For input pins (IN–, IN+, and $\overline{\text{SHUTDOWN}}$) of the TPA2032D1, use 75-µm to 100-µm trace widths at the solder balls. IN– and IN+ traces need to run side-by-side to maximize common-mode noise cancellation.

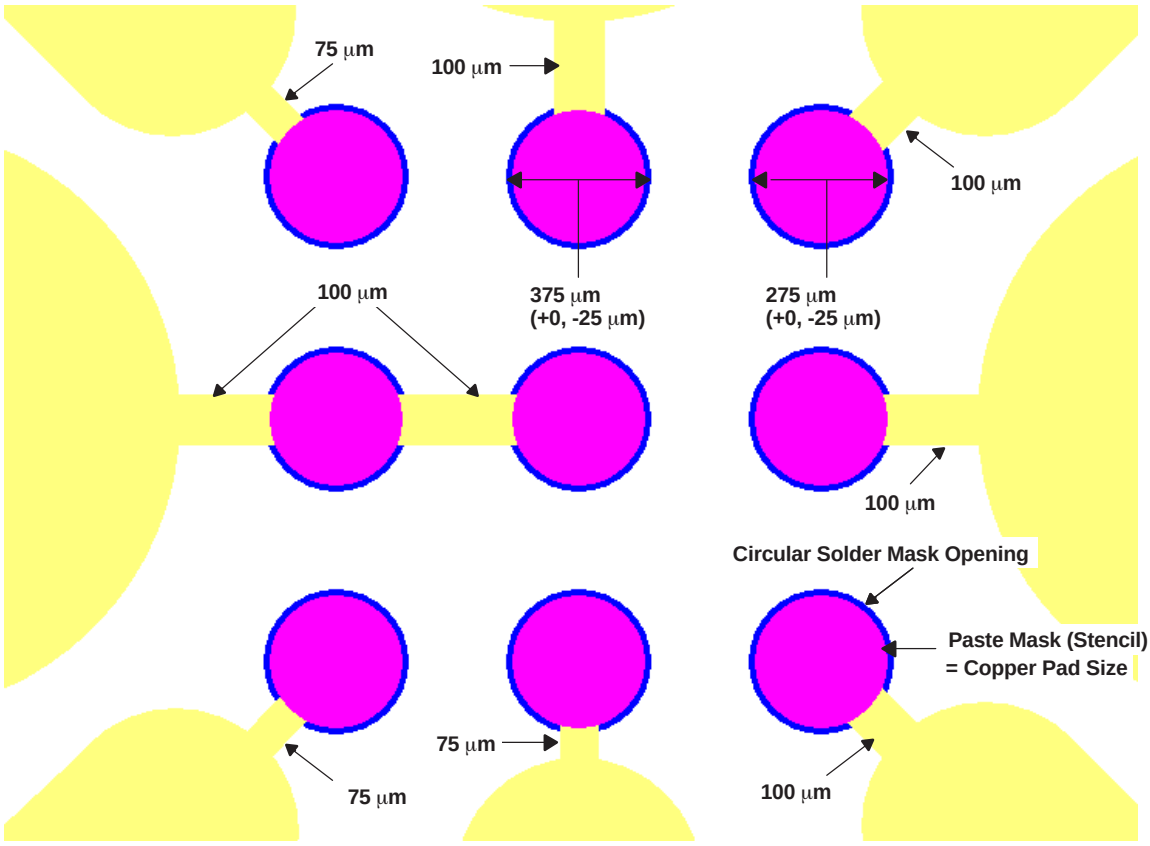

Figure 39. Close Up of TPA2032D1 Land Pattern From TPA2032D1 EVM

EFFICIENCY AND THERMAL INFORMATION

The maximum ambient temperature depends on the heat-sinking ability of the PCB system. The derating factor for the YZF package is shown in the dissipation rating table. Converting this to θ_{JA}:

$$\theta_{JA} = \frac{1}{\text{Derating Factor}} \tag{3}$$

Given θ_{JA} (from the Package Dissipation ratings table), the maximum allowable junction temperature (from the Absolute Maximum ratings table), and the maximum internal dissipation (from Power Dissipation vs Output Power figures) the maximum ambient temperature can be calculated with the following equation. Note that the units on these figures are Watts RMS. Because of crest factor (ratio of peak power to RMS power) from 9–15 dB, thermal limitations are not usually encountered.

$$T_A Max = T_J Max - \theta_{JA} P_{Dmax} \tag{4}$$

The TPA2032D1 is designed with thermal protection that turns the device off when the junction temperature surpasses 150°C to prevent damage to the IC. Note that using speakers more resistive than 4-Ω dramatically increases the thermal performance by reducing the output current and increasing the efficiency of the amplifier. θ_{JA} is a gross approximation of the complex thermal transfer mechanisms between the device and its ambient environment. If the θ_{JA} calculation reveals a potential problem, a more accurate estimate should be made. Please contact TI for further information.

WHEN TO USE AN OUTPUT FILTER

Design the TPA2032D1 without an output filter if the traces from the amplifier to the speaker are short. Wireless handsets and PDAs are great applications for this class-D amplifier to be used without an output filter.

The TPA2032D1 passed FCC- and CE-radiated emissions testing with no shielding with speaker trace wires 100 mm long or less. For longer speaker trace wires, a ferrite bead can often be used in the design if failing radiated emissions testing without an LC filter; and, the frequency-sensitive circuit is greater than 1 MHz. If choosing a ferrite bead, choose one with high impedance at high frequencies, but very low impedance at low frequencies. The selection must also take into account the currents flowing through the ferrite bead. Ferrites can begin to loose effectiveness at much lower than rated current values. Please see the EVM User's Guide for components used successfully by TI.

Figure 40 shows a typical ferrite-bead output filter.

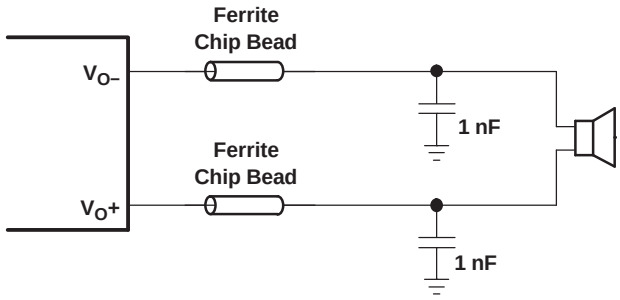

Figure 40. Typical Ferrite Chip Bead Filter

PACKAGING INFORMATION

Orderable Device	Status (1)	Package Type	Package Drawing	Pins	Package Qty	Eco Plan (2)	Lead finish/ Ball material (6)	MSL Peak Temp (3)	Op Temp (°C)	Device Marking (4/5)	Samples
TPA2032D1YZFR	ACTIVE	DSBGA	YZF	9	3000	RoHS & Green	SNAGCU	Level-1-260C-UNLIM	-40 to 85	BPKS	Samples
TPA2032D1YZFT	ACTIVE	DSBGA	YZF	9	250	RoHS & Green	SNAGCU	Level-1-260C-UNLIM	-40 to 85	BPKS	Samples
TPA2033D1YZFR	ACTIVE	DSBGA	YZF	9	3000	RoHS & Green	SNAGCU	Level-1-260C-UNLIM	-40 to 85	BPY	Samples
TPA2034D1YZFR	ACTIVE	DSBGA	YZF	9	3000	RoHS & Green	SNAGCU	Level-1-260C-UNLIM	-40 to 85	BPZ	Samples
TPA2034D1YZFT	ACTIVE	DSBGA	YZF	9	250	RoHS & Green	SNAGCU	Level-1-260C-UNLIM	-40 to 85	BPZ	Samples

(1) The marketing status values are defined as follows:
ACTIVE: Product device recommended for new designs.
LIFEBUY: TI has announced that the device will be discontinued, and a lifetime-buy period is in effect.
NRND: Not recommended for new designs. Device is in production to support existing customers, but TI does not recommend using this part in a new design.
PREVIEW: Device has been announced but is not in production. Samples may or may not be available.
OBSOLETE: TI has discontinued the production of the device.

(2) **RoHS:** TI defines "RoHS" to mean semiconductor products that are compliant with the current EU RoHS requirements for all 10 RoHS substances, including the requirement that RoHS substance do not exceed 0.1% by weight in homogeneous materials. Where designed to be soldered at high temperatures, "RoHS" products are suitable for use in specified lead-free processes. TI may reference these types of products as "Pb-Free".
RoHS Exempt: TI defines "RoHS Exempt" to mean products that contain lead but are compliant with EU RoHS pursuant to a specific EU RoHS exemption.
Green: TI defines "Green" to mean the content of Chlorine (Cl) and Bromine (Br) based flame retardants meet JS709B low halogen requirements of <=1000ppm threshold. Antimony trioxide based flame retardants must also meet the <=1000ppm threshold requirement.

(3) MSL, Peak Temp. - The Moisture Sensitivity Level rating according to the JEDEC industry standard classifications, and peak solder temperature.

(4) There may be additional marking, which relates to the logo, the lot trace code information, or the environmental category on the device.

(5) Multiple Device Markings will be inside parentheses. Only one Device Marking contained in parentheses and separated by a "~" will appear on a device. If a line is indented then it is a continuation of the previous line and the two combined represent the entire Device Marking for that device.

(6) Lead finish/Ball material - Orderable Devices may have multiple material finish options. Finish options are separated by a vertical ruled line. Lead finish/Ball material values may wrap to two lines if the finish value exceeds the maximum column width.

Important Information and Disclaimer: The information provided on this page represents TI's knowledge and belief as of the date that it is provided. TI bases its knowledge and belief on information provided by third parties, and makes no representation or warranty as to the accuracy of such information. Efforts are underway to better integrate information from third parties. TI has taken and continues to take reasonable steps to provide representative and accurate information but may not have conducted destructive testing or chemical analysis on incoming materials and chemicals. TI and TI suppliers consider certain information to be proprietary, and thus CAS numbers and other limited information may not be available for release.

In no event shall TI's liability arising out of such information exceed the total purchase price of the TI part(s) at issue in this document sold by TI to Customer on an annual basis.

TAPE AND REEL INFORMATION

REEL DIMENSIONS

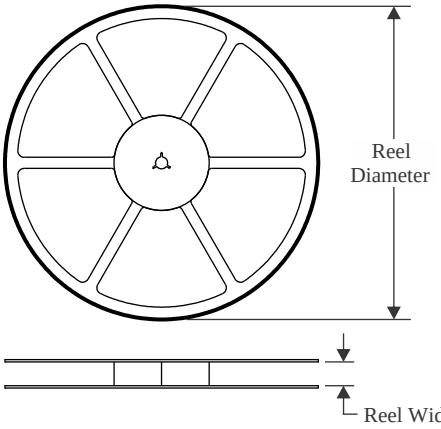

TAPE DIMENSIONS

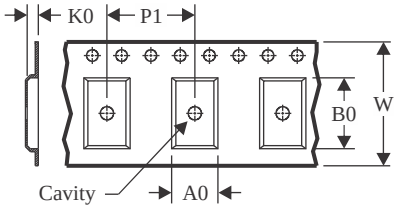

A0	Dimension designed to accommodate the component width
B0	Dimension designed to accommodate the component length
K0	Dimension designed to accommodate the component thickness
W	Overall width of the carrier tape
P1	Pitch between successive cavity centers

QUADRANT ASSIGNMENTS FOR PIN 1 ORIENTATION IN TAPE

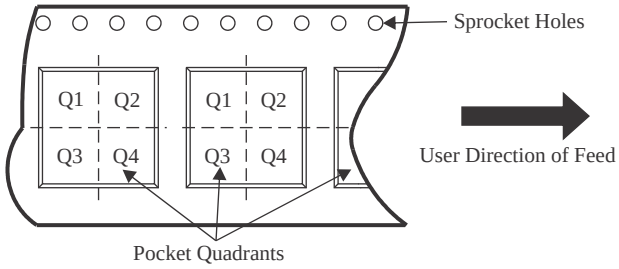

*All dimensions are nominal

Device	Package Type	Package Drawing	Pins	SPQ	Reel Diameter (mm)	Reel Width W1 (mm)	A0 (mm)	B0 (mm)	K0 (mm)	P1 (mm)	W (mm)	Pin1 Quadrant
TPA2032D1YZFR	DSBGA	YZF	9	3000	180.0	8.4	1.65	1.65	0.81	4.0	8.0	Q1
TPA2032D1YZFT	DSBGA	YZF	9	250	180.0	8.4	1.65	1.65	0.81	4.0	8.0	Q1
TPA2033D1YZFR	DSBGA	YZF	9	3000	180.0	8.4	1.65	1.65	0.81	4.0	8.0	Q1
TPA2034D1YZFR	DSBGA	YZF	9	3000	180.0	8.4	1.65	1.65	0.81	4.0	8.0	Q1
TPA2034D1YZFT	DSBGA	YZF	9	250	180.0	8.4	1.65	1.65	0.81	4.0	8.0	Q1

TAPE AND REEL BOX DIMENSIONS

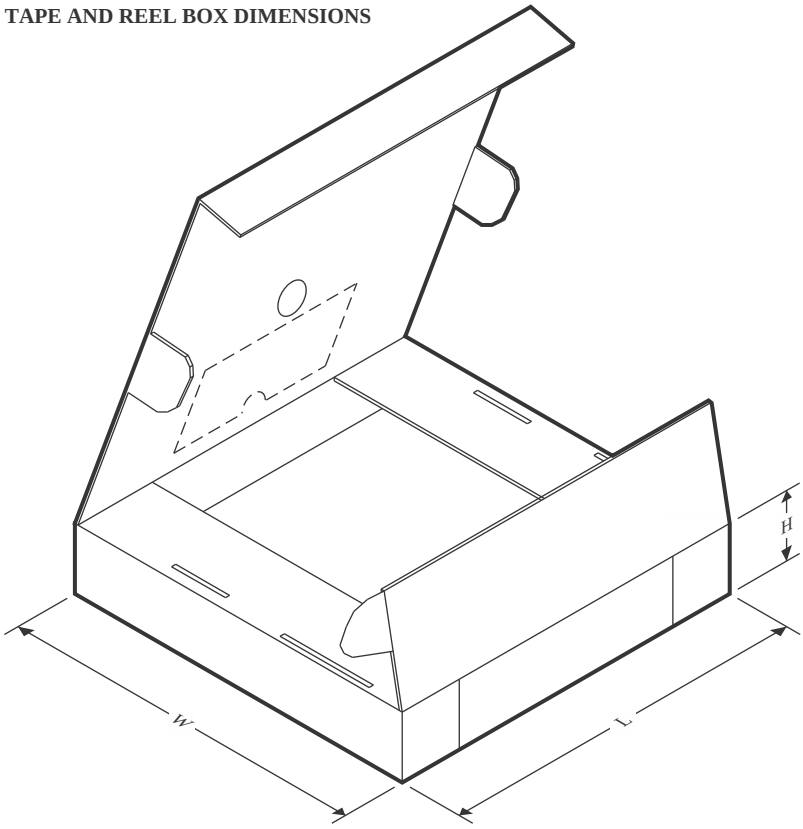

*All dimensions are nominal

Device	Package Type	Package Drawing	Pins	SPQ	Length (mm)	Width (mm)	Height (mm)
TPA2032D1YZFR	DSBGA	YZF	9	3000	182.0	182.0	20.0
TPA2032D1YZFT	DSBGA	YZF	9	250	182.0	182.0	20.0
TPA2033D1YZFR	DSBGA	YZF	9	3000	182.0	182.0	20.0
TPA2034D1YZFR	DSBGA	YZF	9	3000	182.0	182.0	20.0
TPA2034D1YZFT	DSBGA	YZF	9	250	182.0	182.0	20.0

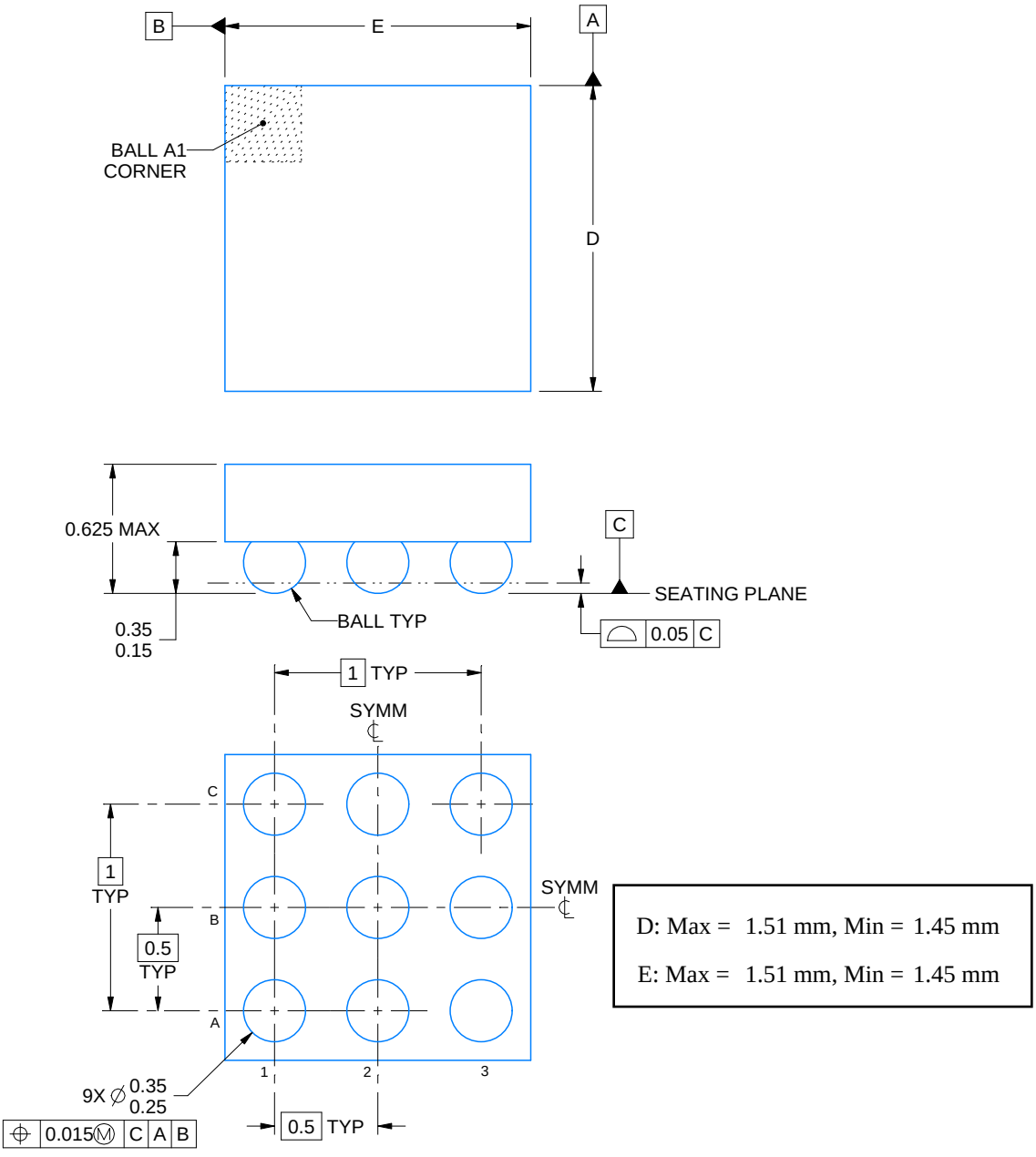

NOTES:

1. All linear dimensions are in millimeters. Any dimensions in parenthesis are for reference only. Dimensioning and tolerancing per ASME Y14.5M.
2. This drawing is subject to change without notice.

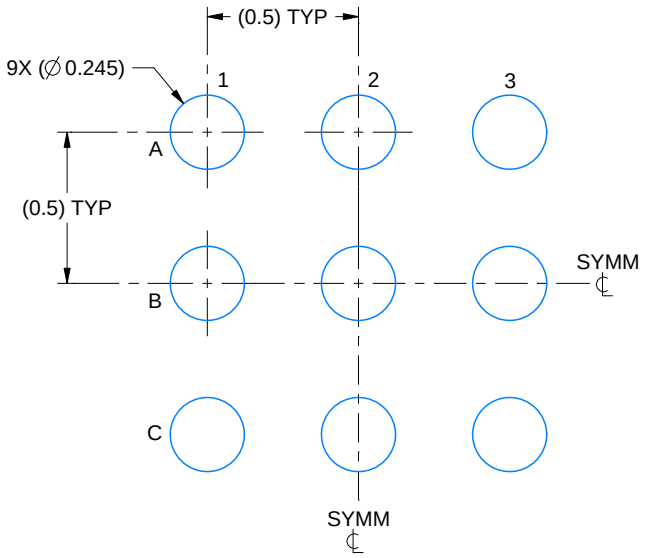

LAND PATTERN EXAMPLE
EXPOSED METAL SHOWN
SCALE: 40X

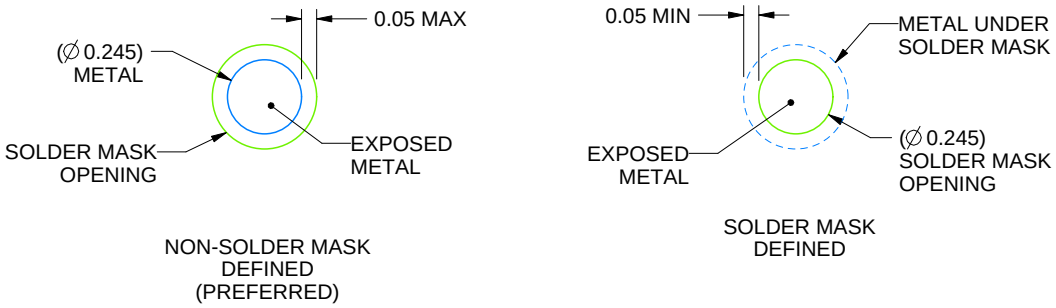

SOLDER MASK DETAILS
NOT TO SCALE

4219558/A 10/2018

NOTES: (continued)

3. Final dimensions may vary due to manufacturing tolerance considerations and also routing constraints.
   See Texas Instruments Literature No. SNVA009 (www.ti.com/lit/snva009).

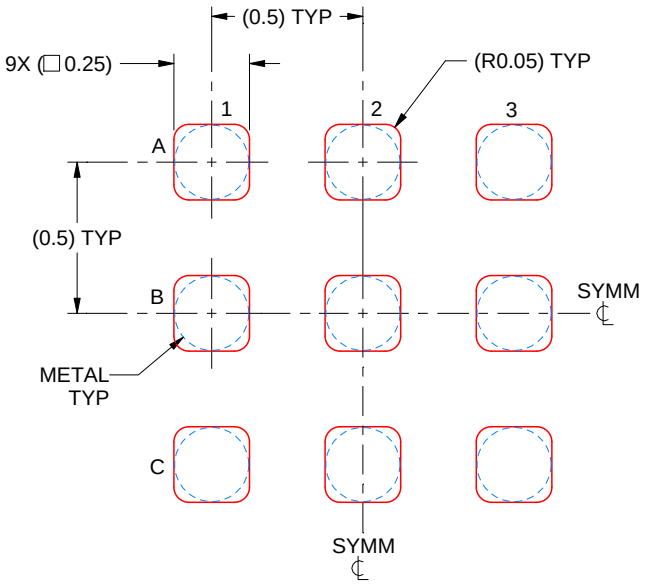

SOLDER PASTE EXAMPLE
BASED ON 0.1 mm THICK STENCIL
SCALE: 40X

4219558/A 10/2018

NOTES: (continued)

4. Laser cutting apertures with trapezoidal walls and rounded corners may offer better paste release.

IMPORTANT NOTICE AND DISCLAIMER

TI PROVIDES TECHNICAL AND RELIABILITY DATA (INCLUDING DATA SHEETS), DESIGN RESOURCES (INCLUDING REFERENCE DESIGNS), APPLICATION OR OTHER DESIGN ADVICE, WEB TOOLS, SAFETY INFORMATION, AND OTHER RESOURCES “AS IS” AND WITH ALL FAULTS, AND DISCLAIMS ALL WARRANTIES, EXPRESS AND IMPLIED, INCLUDING WITHOUT LIMITATION ANY IMPLIED WARRANTIES OF MERCHANTABILITY, FITNESS FOR A PARTICULAR PURPOSE OR NON-INFRINGEMENT OF THIRD PARTY INTELLECTUAL PROPERTY RIGHTS.

These resources are intended for skilled developers designing with TI products. You are solely responsible for (1) selecting the appropriate TI products for your application, (2) designing, validating and testing your application, and (3) ensuring your application meets applicable standards, and any other safety, security, regulatory or other requirements.

These resources are subject to change without notice. TI grants you permission to use these resources only for development of an application that uses the TI products described in the resource. Other reproduction and display of these resources is prohibited. No license is granted to any other TI intellectual property right or to any third party intellectual property right. TI disclaims responsibility for, and you will fully indemnify TI and its representatives against, any claims, damages, costs, losses, and liabilities arising out of your use of these resources.

TI’s products are provided subject to TI’s Terms of Sale or other applicable terms available either on ti.com or provided in conjunction with such TI products. TI’s provision of these resources does not expand or otherwise alter TI’s applicable warranties or warranty disclaimers for TI products.

TI objects to and rejects any additional or different terms you may have proposed.

Mailing Address: Texas Instruments, Post Office Box 655303, Dallas, Texas 75265
Copyright © 2023, Texas Instruments Incorporated