- **B Grade Is 100% Tested for Noise**
  30 nV/√Hz Max at f = 10 Hz
  12 nV/√Hz Max at f = 1 kHz
- **Low Input Offset Voltage . . . 500 μV Max**
- **Excellent Offset Voltage Stability With Temperature . . . 0.5 μV/°C Typ**
- **Rail-to-Rail Output Swing**
- **Low Input Bias Current**
  1 pA Typ at T_A = 25°C
- **Common-Mode Input Voltage Range Includes the Negative Rail**
- **Fully Specified For Both Single-Supply and Split-Supply Operation**

description

The TLC220x, TLC220xA, TLC220xB, and TLC220xY are precision, low-noise operational amplifiers using Texas Instruments Advanced LinCMOS™ process. These devices combine the noise performance of the lowest-noise JFET amplifiers with the dc precision available previously only in bipolar amplifiers. The Advanced LinCMOS™ process uses silicon-gate technology to obtain input offset voltage stability with temperature and time that far exceeds that obtainable using metal-gate technology. In addition, this technology makes possible input impedance levels that meet or exceed levels offered by top-gate JFET and expensive dielectric-isolated devices.

The combination of excellent DC and noise performance with a common-mode input voltage range that includes the negative rail makes these devices an ideal choice for high-impedance, low-level signal-conditioning applications in either single-supply or split-supply configurations.

TYPICAL EQUIVALENT INPUT NOISE VOLTAGE vs FREQUENCY

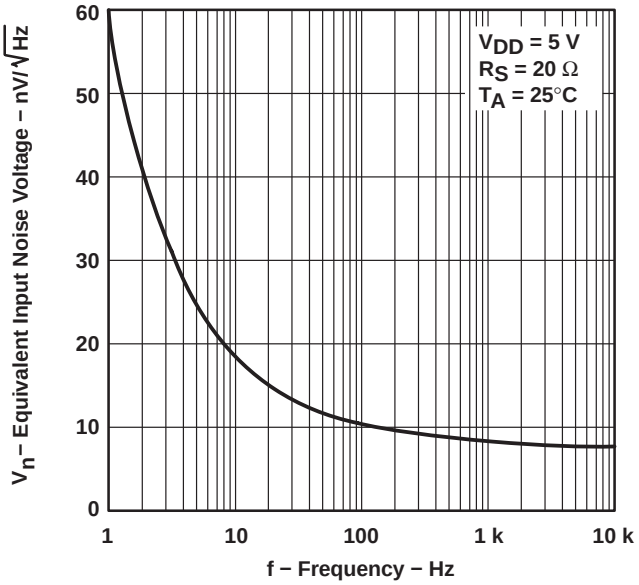

The device inputs and outputs are designed to withstand −100-mA surge currents without sustaining latch-up. In addition, internal ESD-protection circuits prevent functional failures at voltages up to 2000 V as tested under MIL-PRF-38535, Method 3015.2; however, care should be exercised in handling these devices as exposure to ESD may result in degradation of the parametric performance.

The C-suffix devices are characterized for operation from 0°C to 70°C. The I-suffix devices are characterized for operation from −40°C to 85°C. The M-suffix devices are characterized for operation over the full military temperature range of −55°C to 125°C.

Please be aware that an important notice concerning availability, standard warranty, and use in critical applications of Texas Instruments semiconductor products and disclaimers thereto appears at the end of this data sheet.

Advanced LinCMOS is a trademark of Texas Instruments Incorporated. All other trademarks are the property of their respective owners.

PRODUCTION DATA information is current as of publication date. Products conform to specifications per the terms of Texas Instruments standard warranty. Production processing does not necessarily include testing of all parameters.

Copyright © 1997−2008, Texas Instruments Incorporated

On products compliant to MIL-PRF-38535, all parameters are tested unless otherwise noted. On all other products, production processing does not necessarily include testing of all parameters.

TLC2201 AVAILABLE OPTIONS

T_A	V_{IO}max AT 25°C	$V_n$max f = 10 Hz AT 25°C	$V_n$max f = 1 kHz AT 25°C	PACKAGED DEVICES				CHIP FORM‡ (Y)
				SMALL OUTLINE† (D)	CHIP CARRIER (FK)	CERAMIC DIP (JG)	PLASTIC DIP (P)	
0°C to 70°C	200 µV	35 nV/√Hz	15 nV/√Hz	TLC2201ACD	—	—	TLC2201ACP	TLC2201Y
	200 µV	30 nV/√Hz	12 nV/√Hz	TLC2201BCD			TLC2201BCP	
	500 µV	—	—	TLC2201CD			TLC2201CP	
−40°C to 85°C	200 µV	35 nV/√Hz	15 nV/√Hz	TLC2201AID	—	—	TLC2201AIP	—
	200 µV	30 nV/√Hz	12 nV/√Hz	TLC2201BID			TLC2201BIP	
	500 µV	—	—	TLC2201ID			TLC2201IP	
−55°C to 125°C	200 µV	35 nV/√Hz	15 nV/√Hz	TLC2201AMD	TLC2201AMFK	TLC2201AMJG	TLC2201AMP	—
	200 µV	30 nV/√Hz	12 nV/√Hz	TLC2201BMD	TLC2201BMFK	TLC2201BMJG	TLC2201BMP	
	500 µV	—	—	TLC2201MD	TLC2201MFK	TLC2201MJG	TLC2201MP	

† The D packages are available taped and reeled. Add R suffix to device type (e.g. TLC220xBCDR).
‡ Chip forms are tested at 25°C only.

TLC2202 AVAILABLE OPTIONS

T_A	V_{IO}max AT 25°C	$V_n$max f = 10 Hz AT 25°C	$V_n$max f = 1 kHz AT 25°C	PACKAGED DEVICES					CHIP FORM‡ (Y)
				SMALL OUTLINE† (D)	PLASTIC SMALL OUTLINE (PS)	CHIP CARRIER (FK)	CERAMIC DIP (JG)	PLASTIC DIP (P)	
0°C to 70°C	500 µV	30 nV/√Hz	12 nV/√Hz	TLC2202BCD	—	—	—	TLC2202BCP	TLC2202Y
	500 µV	35 nV/√Hz	15 nV/√Hz	TLC2202ACD	—	—	—	TLC2202ACP	
	1 mV	—	—	TLC2202CD	TLC2202CPSR	—	—	TLC2202CP	
−40°C to 85°C	500 µV	30 nV/√Hz	12 nV/√Hz	TLC2202BID	—	—	—	TLC2202BIP	—
	500 µV	35 nV/√Hz	15 nV/√Hz	TLC2202AID	—	—	—	TLC2202AIP	
	1 mV	—	—	TLC2202ID	—	—	—	TLC2202IP	
−55°C to 125°C	500 µV	30 nV/√Hz	12 nV/√Hz	TLC2202BMD	—	TLC2202BMFK	TLC2202BMJG	TLC2202BMP	—
	500 µV	35 nV/√Hz	15 nV/√Hz	TLC2202AMD	—	TLC2202AMFK	TLC2202AMJG	TLC2202AMP	
	1 mV	—	—	TLC2202MD	—	TLC2202MFK	TLC2202MJG	TLC2202MP	

† The D packages are available taped and reeled. Add R suffix to device type (e.g. TLC220xBCDR).
‡ Chip forms are tested at 25°C only.

TLC2201
D, JG, OR P PACKAGE
(TOP VIEW)

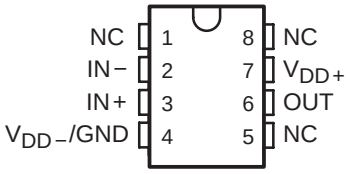

TLC2202
PS, JG, OR P PACKAGE
(TOP VIEW)

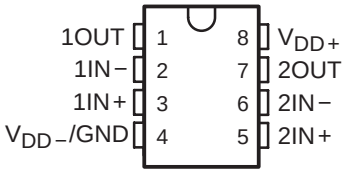

TLC2202
D PACKAGE
(TOP VIEW)

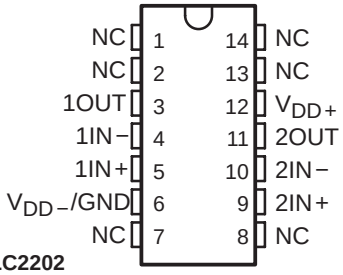

TLC2201
FK PACKAGE
(TOP VIEW)

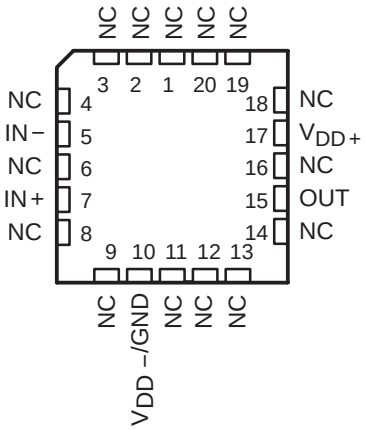

TLC2202
FK PACKAGE
(TOP VIEW)

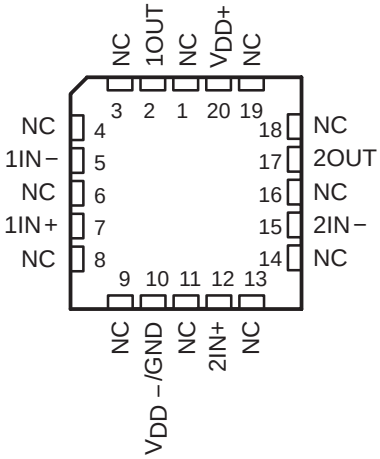

NC − No internal connection

equivalent schematic (each amplifier)

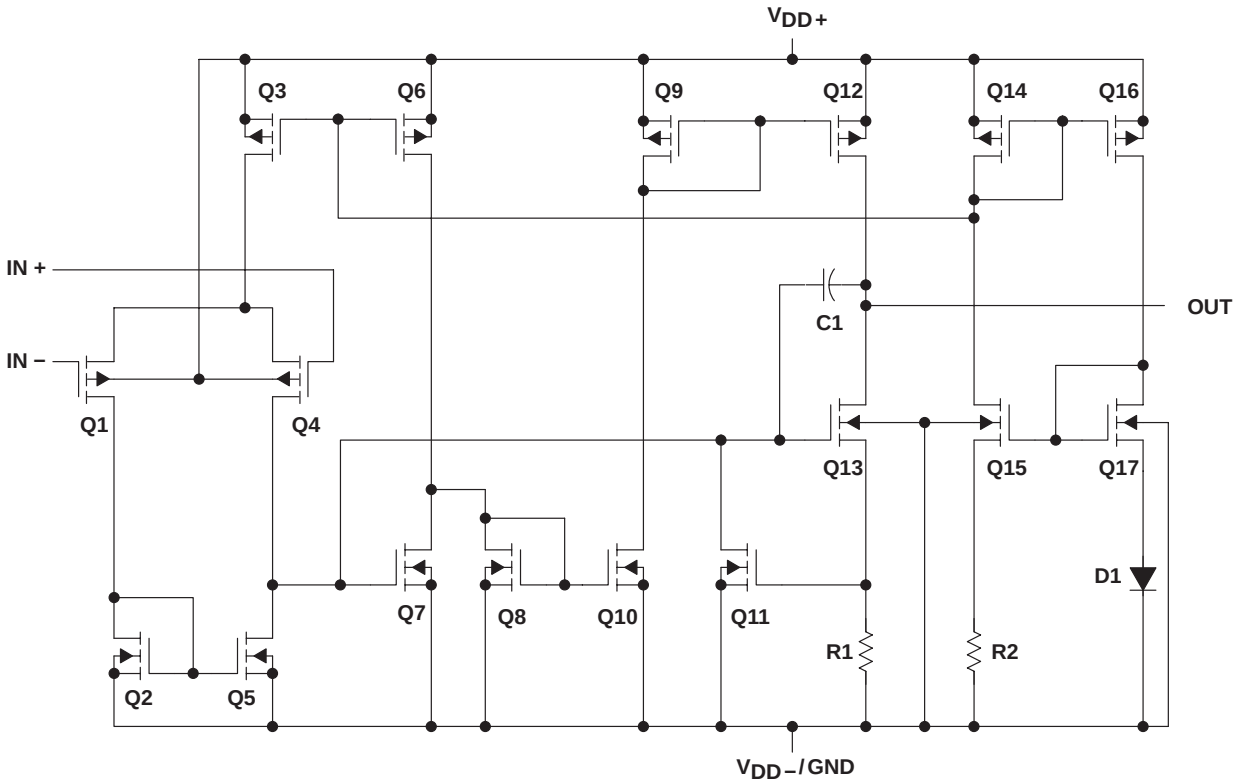

ACTUAL DEVICE COMPONENT COUNT		
COMPONENT	**TLC2201**	**TLC2202**
Transistors	17	34
Resistors	2	2
Diodes	1	4
Capacitors	1	2

TLC2201Y chip information

This chip, when properly assembled, displays characteristics similar to the TLC2201C. Thermal compression or ultrasonic bonding may be used on the doped-aluminum bonding path. Chips may be mounted with conductive epoxy or a gold-silicon preform.

BONDING PAD ASSIGNMENTS

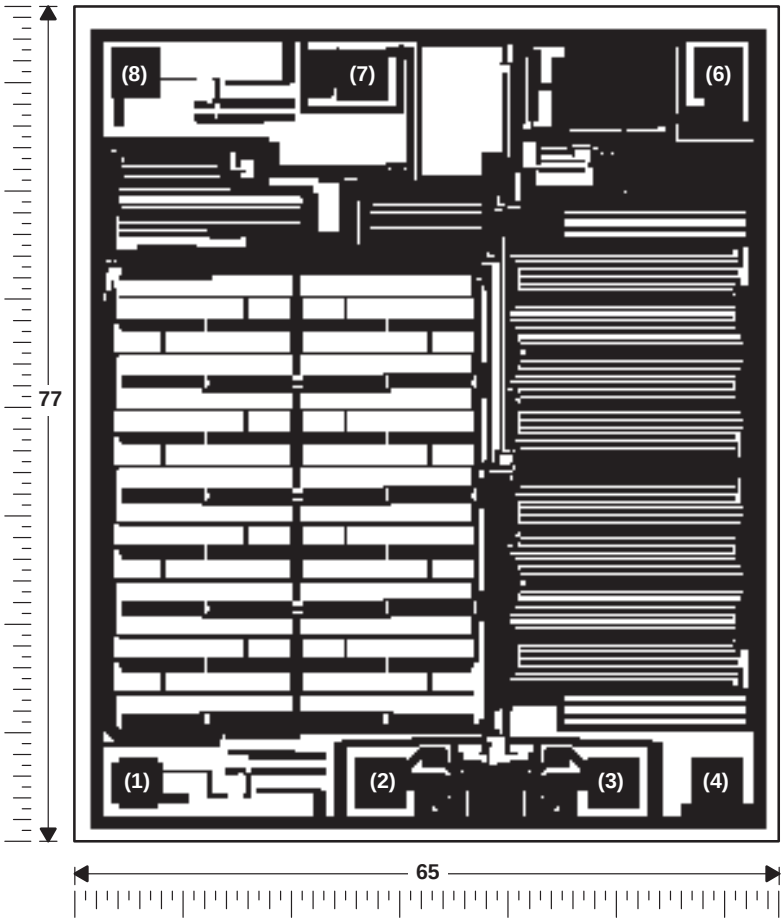

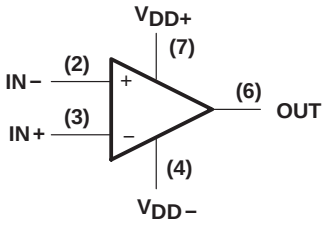

CHIP THICKNESS: 15 MILS TYPICAL

BONDING PADS: 4 × 4 MILS MINIMUM

$T_J$max = 150°C

TOLERANCES ARE ±10%.

ALL DIMENSIONS ARE IN MILS.

PIN (4) IS INTERNALLY CONNECTED TO BACK SIDE OF CHIP.

TERMINAL NUMBERS ARE FOR THE D, JG, AND P PACKAGES.

TLC2202Y chip formation

This chip, when properly assembled, displays characteristics similar to the TLC2202C. Thermal compression or ultrasonic bonding may be used on the doped-aluminum bonding pads. Chips may be mounted with conductive epoxy or a gold-silicon preform.

BONDING PAD ASSIGNMENTS

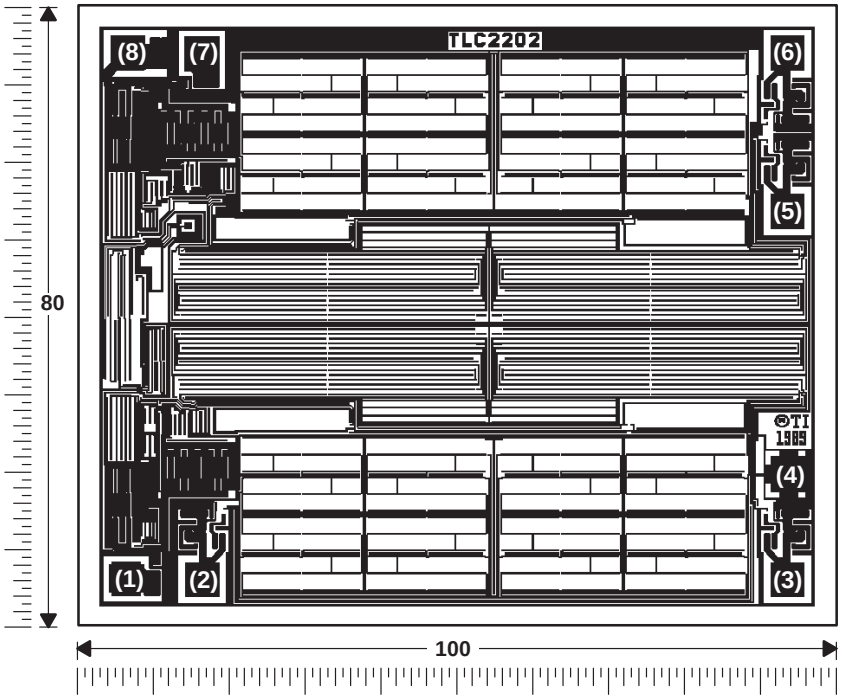

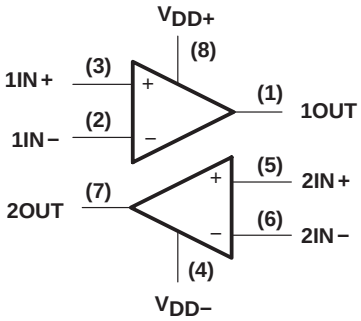

CHIP THICKNESS: 15 MILS TYPICAL

BONDING PADS: 4 × 4 MILS MINIMUM

$T_J$max = 150°C

TOLERANCES ARE ±10%.

ALL DIMENSIONS ARE IN MILS.

PIN (4) IS INTERNALLY CONNECTED TO BACKSIDE OF CHIP.

absolute maximum ratings over operating free-air temperature range (unless otherwise noted)†

Supply voltage, V_{DD+} (see Note 1) . . . . . 8 V
Supply voltage, V_{DD-} . . . . . −8 V
Differential input voltage, V_{ID} (see Note 2) . . . . . ±16 V
Input voltage, V_I (any input) . . . . . ±8 V
Input current, I_I (each input) . . . . . ±5 mA
Output current, I_O (each output) . . . . . ±50 mA
Duration of short-circuit current at (or below) 25°C (see Note 3) . . . . . unlimited
Continuous total dissipation . . . . . See Dissipation Rating Table
Operating free-air temperature range, T_A: C suffix . . . . . 0°C to 70°C
I suffix . . . . . −40°C to 85°C
M suffix . . . . . −55°C to 125°C
Storage temperature range . . . . . −65°C to 150°C
Case temperature for 60 seconds: FK package . . . . . 260°C
Lead temperature 1,6 mm (1/16 inch) from case for 10 seconds: D, PS, or P package . . . . . 260°C
Lead temperature 1,6 mm (1/16 inch) from case for 60 seconds: JG package . . . . . 300°C

† Stresses beyond those listed under “absolute maximum ratings” may cause permanent damage to the device. These are stress ratings only, and functional operation of the device at these or any other conditions beyond those indicated under “recommended operating conditions” is not implied. Exposure to absolute-maximum-rated conditions for extended periods may affect device reliability.

NOTES: 1. All voltage values except differential voltages are with respect to the midpoint between V_{DD+} and V_{DD-}.
2. Differential voltages are at IN+ with respect to IN−.
3. The output may be shorted to either supply. Temperature and/or supply voltages must be limited to ensure that the maximum dissipation rating in not exceeded.

DISSIPATION RATING TABLE

PACKAGE	$T_A \le 25°C$ POWER RATING	DERATING FACTOR ABOVE $T_A = 25°C$	$T_A = 70°C$ POWER RATING	$T_A = 85°C$ POWER RATING	$T_A = 125°C$ POWER RATING
D−8	725 mW	5.8 mW/°C	464 mW	377 mW	145 mW
D−14	950 mW	7.6 mW/°C	608 mW	494 mW	190 mW
PS	770 mW	6.2 mW/°C	496 mW	403 mW	155 mW
FK	1375 mW	11.0 mW/°C	880 mW	715 mW	275 mW
JG	1050 mW	8.4 mW/°C	672 mW	546 mW	210 mW
P	1000 mW	8.0 mW/°C	640 mW	520 mW	200 mW

recommended operating conditions

	C SUFFIX		I SUFFIX		M SUFFIX		UNIT
	MIN	MAX	MIN	MAX	MIN	MAX	
Supply voltage, V_{DD}±	±2.3	±8	±2.3	±8	±2.3	±8	V
Common-mode input voltage, V_{IC}	V_{DD-}	V_{DD+} −2.3	V_{DD-}	V_{DD+} −2.3	V_{DD-}	V_{DD+} −2.3	V
Operating free-air temperature, T_A	0	70	−40	85	−55	125	°C

TLC2201C electrical characteristics at specified free-air temperature, $V_{DD\pm}$ = ±5 V (unless otherwise noted)

PARAMETER		TEST CONDITIONS	T_A†	TLC2201C			UNIT
				MIN	TYP	MAX	
V_{IO}	Input offset voltage	V_{IC} = 0, R_S = 50 Ω	25°C		100	500	µV
			Full range			600	
α_{VIO}	Temperature coefficient of input offset voltage		Full range		0.5		µV/°C
	Input offset voltage long-term drift (see Note 4)		25°C		0.001	0.005	µV/mo
I_{IO}	Input offset current		25°C		0.5	60	pA
			Full range			100	
I_{IB}	Input bias current		25°C		1	60	pA
			Full range			100	
V_{ICR}	Common-mode input voltage range	R_S = 50 Ω	Full range	−5 to 2.7			V
V_{OM+}	Maximum positive peak output voltage swing	R_L = 10 kΩ	25°C	4.7	4.8		V
			Full range	4.7			
V_{OM-}	Maximum negative peak output voltage swing		25°C	−4.7	−4.9		V
			Full range	−4.7			
A_{VD}	Large-signal differential voltage amplification	V_O = ±4 V, R_L = 500 kΩ	25°C	400	560		V/mV
			Full range	300			
		V_O = ±4 V, R_L = 10 kΩ	25°C	90	100		
			Full range	70			
CMRR	Common-mode rejection ratio	V_{IC} = V_{ICR}min, V_O = 0, R_S = 50 Ω	Full range	85			dB
k_{SVR}	Supply voltage rejection ratio ($\Delta V_{DD\pm}/\Delta V_{IO}$)	$V_{DD\pm}$ = ±2.3 V to ±8 V	25°C	90	110		dB
			Full range	85			
I_{DD}	Supply current	V_O = 0, No load	25°C		1.1	1.5	mA
			Full range			1.5	

† Full range is 0°C to +70°C.

NOTE 4: Typical values are based on the input offset voltage shift observed through 168 hours of operating life test at T_A = 150 °C extrapolated to T_A = 25 °C using the Arrhenius equation and assuming an activation energy of 0.96 eV.

TLC2201C operating characteristics at specified free-air temperature, $V_{DD\pm}$ = ±5 V

PARAMETER		TEST CONDITIONS	T_A†	TLC2201C			UNIT
				MIN	TYP	MAX	
SR	Slew rate at unity gain	V_O = ±2.3 V, R_L = 10 kΩ, C_L = 100 pF	25°C	2	2.7		V/µs
			Full range	1.5			
V_n	Equivalent input noise voltage	f = 10 Hz	25°C		18		nV/√Hz
		f = 1 kHz	25°C		8		
$V_{N(PP)}$	Peak-to-peak equivalent input noise voltage	f = 0.1 to 1 Hz	25°C		0.5		µV
		f = 0.1 to 10 Hz	25°C		0.7		
I_n	Equivalent input noise current		25°C		0.6		fA/√Hz
	Gain-bandwidth product	f = 10 kHz, R_L = 10 kΩ, C_L = 100 pF	25°C		1.9		MHz
ϕ_m	Phase margin at unity gain	R_L = 10 kΩ, C_L = 100 pF	25°C		48°		

† Full range is 0°C to +70°C.

TLC2201C electrical characteristics at specified free-air temperature, $V_{DD\pm}$ = ±5 V (unless otherwise noted)

PARAMETER		TEST CONDITIONS	T_A†	TLC2201AC			TLC2201BC			UNIT
				MIN	TYP	MAX	MIN	TYP	MAX	
V_{IO}	Input offset voltage	V_{IC} = 0, R_S = 50 Ω	25°C		80	200		80	200	μV
			Full range			300			300	
α_{VIO}	Temperature coefficient of input offset voltage		Full range		0.5			0.5		μV/°C
	Input offset voltage long-term drift (see Note 4)		25°C		0.001	0.005		0.001	0.005	μV/mo
I_{IO}	Input offset current		25°C		0.5	60		0.5	60	pA
			Full range			100			100	
I_{IB}	Input bias current		25°C		1	60		1	60	pA
			Full range			100			100	
V_{ICR}	Common-mode input voltage range	R_S = 50 Ω	Full range	−5 to 2.7			−5 to 2.7			V
V_{OM+}	Maximum positive peak output voltage swing	R_L = 10 kΩ	25°C	4.7	4.8		4.7	4.8		V
			Full range	4.7			4.7			
V_{OM-}	Maximum negative peak output voltage swing		25°C	−4.7	−4.9		−4.7	−4.9		V
			Full range	−4.7			−4.7			
A_{VD}	Large-signal differential voltage amplification	V_O = ±4 V, R_L = 500 kΩ	25°C	400	560		400	560		V/mV
			Full range	300			300			
		V_O = ±4 V, R_L = 10 kΩ	25°C	90	100		90	100		
			Full range	70			70			
CMRR	Common-mode rejection ratio	V_{IC} = V_{ICR}min, V_O = 0, R_S = 50 Ω	25°C	90	115		90	115		dB
			Full range	85			85			
k_{SVR}	Supply voltage rejection ratio ($\Delta V_{DD\pm}/\Delta V_{IO}$)	$V_{DD\pm}$ = ±2.3 V to ±8 V	25°C	90	110		90	110		dB
			Full range	85			85			
I_{DD}	Supply current	V_O = 0, No load	25°C		1.1	1.5		1.1	1.5	mA
			Full range			1.5			1.5	

† Full range is 0°C to +70°C.

NOTE 4: Typical values are based on the input offset voltage shift observed through 168 hours of operating life test at T_A = 150°C extrapolated to T_A = 25°C using the Arrhenius equation and assuming an activation energy of 0.96 eV.

TLC2201C operating characteristics at specified free-air temperature, $V_{DD\pm}$ = ±5 V

PARAMETER		TEST CONDITIONS	T_A†	TLC2201AC			TLC2201BC			UNIT
				MIN	TYP	MAX	MIN	TYP	MAX	
SR	Slew rate at unity gain	V_O = ±2.3 V, R_L = 10 kΩ, C_L = 100 pF	25°C	2	2.7		2	2.7		V/μs
			Full range	1.5			1.5			
V_n	Equivalent input noise voltage (see Note 5)	f = 10 Hz	25°C		18	35		18	30	nV/√Hz
		f = 1 kHz	25°C		8	15		8	12	
$V_{N(PP)}$	Peak-to-peak equivalent input noise voltage	f = 0.1 to 1 Hz	25°C		0.5			0.5		μV
		f = 0.1 to 10 Hz	25°C		0.7			0.7		
I_n	Equivalent input noise current		25°C		0.6			0.6		fA/√Hz
	Gain-bandwidth product	f = 10 kHz, R_L = 10 kΩ, C_L = 100 pF	25°C		1.9			1.9		MHz
ϕ_m	Phase margin at unity gain	R_L = 10 kΩ, C_L = 100 pF	25°C		48°			48°		

† Full range is 0°C to +70°C.

NOTE 5: This parameter is tested on a sample basis for the TLC2201A and on all devices for the TLC2201B. For other test requirements, please contact the factory. This statement has no bearing on testing or nontesting of other parameters.

TLC2201C electrical characteristics at specified free-air temperature, V_{DD} = 5 V (unless otherwise noted)

PARAMETER		TEST CONDITIONS	T_A†	TLC2201C			UNIT
				MIN	TYP	MAX	
V_{IO}	Input offset voltage	V_{IC} = 0, R_S = 50 Ω	25°C		100	500	μV
			Full range			600	
α_{VIO}	Temperature coefficient of input offset voltage		Full range		0.5		μV/°C
	Input offset voltage long-term drift (see Note 4)		25°C		0.001	0.005	μV/mo
I_{IO}	Input offset current		25°C		0.5	60	pA
			Full range			100	
I_{IB}	Input bias current		25°C		1	60	pA
			Full range			100	
V_{ICR}	Common-mode input voltage range	R_S = 50 Ω	Full range	0 to 2.7			V
V_{OH}	Maximum high-level output voltage	R_L = 10 kΩ	25°C	4.7	4.8		V
			Full range	4.7			
V_{OL}	Maximum low-level output voltage	I_O = 0	25°C		0	50	mV
			Full range			50	
A_{VD}	Large-signal differential voltage amplification	V_O = 1 V to 4 V, R_L = 500 kΩ	25°C	150	315		V/mV
			Full range	100			
		V_O = 1 V to 4 V, R_L = 10 kΩ	25°C	25	55		
			Full range	15			
CMRR	Common-mode rejection ratio	V_{IC} = V_{ICR}min, V_O = 0, R_S = 50 Ω	25°C	90	110		dB
			Full range	85			
k_{SVR}	Supply voltage rejection ratio ($\Delta V_{DD\pm}/\Delta V_{IO}$)	V_{DD} = 4.6 V to 16 V	25°C	90	110		dB
			Full range	85			
I_{DD}	Supply current	V_O = 2.5 V, No load	25°C		1	1.5	mA
			Full range			1.5	

† Full range is 0°C to +70°C.

NOTE 4: Typical values are based on the input offset voltage shift observed through 168 hours of operating life test at T_A = 150 °C extrapolated to T_A = 25 °C using the Arrhenius equation and assuming an activation energy of 0.96 eV.

TLC2201C operating characteristics at specified free-air temperature, V_{DD} = 5 V

PARAMETER		TEST CONDITIONS	T_A†	TLC2201C			UNIT
				MIN	TYP	MAX	
SR	Slew rate at unity gain	V_O = 0.5 V to 2.5 V, R_L = 10 kΩ, C_L = 100 pF	25°C	1.8	2.5		V/μs
			Full range	1.3			
V_n	Equivalent input noise voltage	f = 10 Hz	25°C		18		nV/√Hz
		f = 1 kHz	25°C		8		
$V_{N(PP)}$	Peak-to-peak equivalent input noise voltage	f = 0.1 to 1 Hz	25°C		0.5		μV
		f = 0.1 to 10 Hz	25°C		0.7		
I_n	Equivalent input noise current		25°C		0.6		fA/√Hz
	Gain-bandwidth product	f = 10 kHz, R_L = 10 kΩ, C_L = 100 pF	25°C		1.8		MHz
ϕ_m	Phase margin at unity gain	R_L = 10 kΩ, C_L = 100 pF	25°C		45°		

† Full range is 0°C to +70°C.

TLC2201C electrical characteristics at specified free-air temperature, V_{DD} = 5 V (unless otherwise noted)

PARAMETER		TEST CONDITIONS	T_A†	TLC2201AC			TLC2201BC			UNIT
				MIN	TYP	MAX	MIN	TYP	MAX	
V_{IO}	Input offset voltage	V_{IC} = 0, R_S = 50 Ω	25°C		80	200		80	200	μV
			Full range			300			300	
α_{VIO}	Temperature coefficient of input offset voltage		Full range		0.5			0.5		μV/°C
	Input offset voltage long-term drift (see Note 4)		25°C		0.001	0.005		0.001	0.005	μV/mo
I_{IO}	Input offset current		25°C		0.5	60		0.5	60	pA
			Full range			100			100	
I_{IB}	Input bias current		25°C		1	60		1	60	pA
			Full range			100			100	
V_{ICR}	Common-mode input voltage range	R_S = 50 Ω	Full range	0 to 2.7			0 to 2.7			V
V_{OH}	Maximum high-level output voltage	R_L = 10 kΩ	25°C	4.7	4.8		4.7	4.8		V
			Full range	4.7			4.7			
V_{OL}	Maximum low-level output voltage	I_O = 0	25°C		0	50		0	50	mV
			Full range			50			50	
A_{VD}	Large-signal differential voltage amplification	V_O = 1 V to 4 V, R_L = 500 kΩ	25°C	150	315		150	315		V/mV
			Full range	100			100			
		V_O = 1 V to 4 V, R_L = 10 kΩ	25°C	25	55		25	55		
			Full range	15			15			
CMRR	Common-mode rejection ratio	V_{IC} = V_{ICR}min, V_O = 0, R_S = 50 Ω	25°C	90	110		90	110		dB
			Full range	85			85			
k_{SVR}	Supply voltage rejection ratio ($\Delta V_{DD\pm}/\Delta V_{IO}$)	V_{DD} = 4.6 V to 16 V	25°C	90	110		90	110		dB
			Full range	85			85			
I_{DD}	Supply current	V_O = 2.5 V, No load	25°C		1	1.5		1	1.5	mA
			Full range			1.5			1.5	

† Full range is 0°C to +70°C.

NOTE 4: Typical values are based on the input offset voltage shift observed through 168 hours of operating life test at T_A = 150°C extrapolated to T_A = 25°C using the Arrhenius equation and assuming an activation energy of 0.96 eV.

TLC2201C operating characteristics at specified free-air temperature, V_{DD} = 5 V

PARAMETER		TEST CONDITIONS	T_A†	TLC2201AC			TLC2201BC			UNIT
				MIN	TYP	MAX	MIN	TYP	MAX	
SR	Slew rate at unity gain	V_O = 0.5 V to 2.5 V, R_L = 10 kΩ, C_L = 100 pF	25°C	1.8	2.5		1.8	2.5		V/μs
			Full range	1.3			1.3			
V_n	Equivalent input noise voltage (see Note 5)	f = 10 Hz	25°C		18	35		18	30	nV/√Hz
		f = 1 kHz	25°C		8	15		8	12	
$V_{N(PP)}$	Peak-to-peak equivalent input noise voltage	f = 0.1 to 1 Hz	25°C		0.5			0.5		μV
		f = 0.1 to 10 Hz	25°C		0.7			0.7		
I_n	Equivalent input noise current		25°C		0.6			0.6		fA/√Hz
	Gain-bandwidth product	f = 10 kHz, R_L = 10 kΩ, C_L = 100 pF	25°C		1.8			1.8		MHz
ϕ_m	Phase margin at unity gain	R_L = 10 kΩ, C_L = 100 pF	25°C		45°			45°		

† Full range is 0°C to +70°C.

NOTE 5: This parameter is tested on a sample basis for the TLC2201A and on all devices for the TLC2201B. For other test requirements, please contact the factory. This statement has no bearing on testing or nontesting of other parameters.

TLC2202C electrical characteristics at specified free-air temperature, $V_{DD\pm}$ = ±5 V (unless otherwise specified)

PARAMETER		TEST CONDITIONS	T_A†	TLC2202C			UNIT
				MIN	TYP	MAX	
V_{IO}	Input offset voltage	V_{IC} = 0, R_S = 50 Ω	25°C		100	1000	μV
			Full range			1150	
α_{VIO}	Temperature coefficient of input offset voltage		Full range		0.5		μV/°C
	Input offset voltage long-term drift (see Note 4)		25°C		0.001	0.005	μV/mo
I_{IO}	Input offset current		25°C		0.5	60	pA
			Full range			100	
I_{IB}	Input bias current		25°C		1	60	
			Full range			100	
V_{ICR}	Common-mode input voltage range	R_S = 50 Ω	Full range	−5 to 2.7			V
V_{OM+}	Maximum positive peak output voltage swing	R_L = 10 kΩ	25°C	4.7	4.8		V
			Full range	4.7			
V_{OM-}	Maximum negative peak output voltage swing		25°C	−4.7	−4.9		
			Full range	−4.7			V
A_{VD}	Large-signal differential voltage amplification	V_O = ±4 V, R_L = 500 kΩ	25°C	300	560		V/mV
			Full range	200			
		V_O = ±4 V, R_L = 10 kΩ	25°C	50	100		
			Full range	25			
CMRR	Common-mode rejection ratio	V_O = 0, V_{IC} = V_{ICR}min, R_S = 50 Ω	25°C	80	115		dB
			Full range	80			
k_{SVR}	Supply-voltage rejection ratio ($\Delta V_{DD\pm}/\Delta V_{IO}$)	$V_{DD\pm}$ = ±2.3 V to ±8 V	25°C	80	110		dB
			Full range	80			
I_{DD}	Supply current	V_O = 0, No load	25°C		1.8	2.7	mA
			Full range			2.7	

† Full range is 0°C to +70°C.

NOTE 4: Typical values are based on the input offset voltage shift observed through 168 hours of operating life test at T_A = 150 °C extrapolated to T_A = 25 °C using the Arrhenius equation and assuming an activation energy of 0.96 eV.

TLC2202C operating characteristics at specified free-air temperature, $V_{DD\pm}$ = ±5 V

PARAMETER		TEST CONDITIONS	T_A†	TLC2202C			UNIT
				MIN	TYP	MAX	
SR	Slew rate at unity gain	V_O = ±2.3 V, R_L = 10 kΩ, C_L = 100 pF	25°C	1.8	2.7		V/μs
			Full range	1.3			
V_n	Equivalent input noise voltage	f = 10 Hz	25°C		18		nV/√Hz
		f = 1 kHz	25°C		8		
$V_{N(PP)}$	Peak-to-peak equivalent input noise voltage	f = 0.1 to 1 Hz	25°C		0.5		μV
		f = 0.1 to 10 Hz	25°C		0.7		
I_n	Equivalent input noise current		25°C		0.6		fA/√Hz
	Gain-bandwidth product	f = 10 kHz, R_L = 10 kΩ, C_L = 100 pF	25°C		1.9		MHz
ϕ_m	Phase margin at unity gain	R_L = 10 kΩ, C_L = 100 pF	25°C		48°		

† Full range is 0°C to +70°C.

TLC2202C electrical characteristics at specified free-air temperature, $V_{DD\pm}$ = ±5 V (unless otherwise noted)

PARAMETER		TEST CONDITIONS	T_A†	TLC2202AC			TLC2202BC			UNIT
				MIN	TYP	MAX	MIN	TYP	MAX	
V_{IO}	Input offset voltage	V_{IC} = 0, R_S = 50 Ω	25°C		80	500		80	500	µV
			Full range			650			650	
α_{VIO}	Temperature coefficient of input offset voltage		Full range		0.5			0.5		µV/°C
	Input offset voltage long-term drift (see Note 4)		25°C		0.001	0.005		0.001	0.005	µV/mo
I_{IO}	Input offset current		25°C		0.5	60		0.5	60	pA
			Full range			100			100	
I_{IB}	Input bias current		25°C		1	60		1	60	pA
			Full range			100			100	
V_{ICR}	Common-mode input voltage range	R_S = 50 Ω	Full range	−5 to 2.7			−5 to 2.7			V
V_{OM+}	Maximum positive peak output voltage swing	R_L = 10 kΩ	25°C	4.7	4.8		4.7	4.8		V
			Full range	4.7			4.7			
V_{OM-}	Maximum negative peak output voltage swing		25°C	−4.7	−4.9		−4.7	−4.9		V
			Full range	−4.7			−4.7			
A_{VD}	Large-signal differential voltage amplification	V_O = ±4 V, R_L = 500 kΩ	25°C	300	560		300	560		V/mV
			Full range	200			200			
		V_O = ±4 V, R_L = 10 kΩ	25°C	50	100		50	100		
			Full range	25			25			
CMRR	Common-mode rejection ratio	V_{IC} = V_{ICR}min, V_O = 0, R_S = 50 Ω	25°C	80	115		80	115		dB
			Full range	80			80			
k_{SVR}	Supply-voltage rejection ratio ($\Delta V_{DD\pm}/\Delta V_{IO}$)	$V_{DD\pm}$ = ±2.3 V to ±8 V	25°C	80	110		80	110		dB
			Full range	80			80			
I_{DD}	Supply current	V_O = 0, No load	25°C		1.8	2.7		1.8	2.7	mA
			Full range			2.7			2.7	

† Full range is 0°C to +70°C.

NOTE 4: Typical values are based on the input offset voltage shift observed through 168 hours of operating life test at T_A = 150°C extrapolated to T_A = 25°C using the Arrhenius equation and assuming an activation energy of 0.96 eV.

TLC2202C operating characteristics at specified free-air temperature, $V_{DD\pm}$ = ±5 V

PARAMETER		TEST CONDITIONS	T_A†	TLC2202AC			TLC2202BC			UNIT
				MIN	TYP	MAX	MIN	TYP	MAX	
SR	Slew rate at unity gain	V_O = ±2.3 V, R_L = 10 kΩ, C_L = 100 pF	25°C	1.8	2.7		1.8	2.7		V/µs
			Full range	1.3			1.3			
V_n	Equivalent input noise voltage (see Note 5)	f = 10 Hz	25°C		18	35		18	30	nV/√Hz
		f = 1 kHz	25°C		8	15		8	12	
$V_{N(PP)}$	Peak-to-peak equivalent input noise voltage	f = 0.1 to 1 Hz	25°C		0.5			0.5		µV
		f = 0.1 to 10 Hz	25°C		0.7			0.7		
I_n	Equivalent input noise current		25°C		0.6			0.6		fA/√Hz
	Gain-bandwidth product	f = 10 kHz, R_L = 10 kΩ, C_L = 100 pF	25°C		1.9			1.9		MHz
ϕ_m	Phase margin at unity gain	R_L = 10 kΩ, C_L = 100 pF	25°C		48°			48°		

† Full range is 0°C to +70°C.

NOTE 5: This parameter is tested on a sample basis for the TLC2202A and on all devices for the TLC2202B. For other test requirements, please contact the factory. This statement has no bearing on testing or nontesting of other parameters.

TLC2202C electrical characteristics at specified free-air temperature, V_{DD} = 5 V (unless otherwise noted)

PARAMETER		TEST CONDITIONS	T_A†	TLC2202C			UNIT
				MIN	TYP	MAX	
V_{IO}	Input offset voltage	V_{IC} = 0, R_S = 50 Ω	25°C		100	1000	μV
			Full range			1150	
α_{VIO}	Temperature coefficient of input offset voltage		Full range		0.5		μV/°C
	Input offset voltage long-term drift (see Note 4)		25°C		0.001	0.005	μV/mo
I_{IO}	Input offset current		25°C		0.5	60	pA
			Full range			100	
I_{IB}	Input bias current		25°C		1	60	pA
			Full range			100	
V_{ICR}	Common-mode input voltage range	R_S = 50 Ω	Full range	0 to 2.7			V
V_{OH}	Maximum high-level output voltage	R_L = 10 kΩ	25°C	4.7	4.8		V
			Full range	4.7			
V_{OL}	Maximum low-level output voltage	I_O = 0	25°C		0	50	mV
			Full range			50	
A_{VD}	Large-signal differential voltage amplification	V_O =1 V to 4 V, R_L = 500 kΩ	25°C	150	315		V/mV
			Full range	100			
		V_O = 1 V to 4 V, R_L = 10 kΩ	25°C	25	55		
			Full range	15			
CMRR	Common-mode rejection ratio	V_O = 0, V_{IC} = V_{ICR}min, R_S = 50 Ω	25°C	75	110		dB
			Full range	75			
k_{SVR}	Supply-voltage rejection ratio ($\Delta V_{DD\pm}/\Delta V_{IO}$)	V_{DD}= 4.6 V to 16 V	25°C	80	110		dB
			Full range	80			
I_{DD}	Supply current	V_O = 0, No load	25°C		1.7	2.6	mA
			Full range			2.6	

† Full range is 0°C to +70°C.

NOTE 4: Typical values are based on the input offset voltage shift observed through 168 hours of operating life test at T_A = 150°C extrapolated to T_A = 25°C using Arrhenius equation and assuming an activation energy of 0.96 eV.

TLC2202C operating characteristics at specified free-air temperature, V_{DD} = 5 V

PARAMETER		TEST CONDITIONS	T_A†	TLC2202C			UNIT
				MIN	TYP	MAX	
SR	Slew rate at unity gain	V_O = 0.5 V to 2.5 V, R_L = 10 kΩ, C_L = 100 pF	25°C	1.6	2.5		V/μs
			Full range	1.1			
V_n	Equivalent input noise voltage	f = 10 Hz	25°C		18		nV/√Hz
		f = 1 kHz	25°C		8		
$V_{N(PP)}$	Peak-to-peak equivalent input noise voltage	f = 0.1 to 1 Hz	25°C		0.5		μV
		f = 0.1 to 10 Hz	25°C		0.7		
I_n	Equivalent input noise current		25°C		0.6		fA/√Hz
	Gain-bandwidth product	f = 10 kHz, R_L = 10 kΩ, C_L = 100 pF	25°C		1.9		MHz
ϕ_m	Phase margin at unity gain	R_L = 10 kΩ, C_L = 100 pF	25°C		47°		

† Full range is 0°C to +70°C.

TLC2202C electrical characteristics at specified free-air temperature, V_{DD} = 5 V (unless otherwise noted)

PARAMETER		TEST CONDITIONS	T_A†	TLC2202AC			TLC2202BC			UNIT
				MIN	TYP	MAX	MIN	TYP	MAX	
V_{IO}	Input offset voltage	V_{IC} = 0, R_S = 50 Ω	25°C		80	500		80	500	μV
			Full range			650			650	
α_{VIO}	Temperature coefficient of input offset voltage		Full range		0.5			0.5		μV/°C
	Input offset voltage long-term drift (see Note 4)		25°C		0.001	0.005		0.001	0.005	μV/mo
I_{IO}	Input offset current		25°C		0.5	60		0.5	60	pA
			Full range			100			100	
I_{IB}	Input bias current		25°C		1	60		1	60	pA
			Full range			100			100	
V_{ICR}	Common-mode input voltage range	R_S = 50 Ω	Full range	0 to 2.7			0 to 2.7			V
V_{OH}	Maximum high-level output voltage	R_L = 10 kΩ	25°C	4.7	4.8		4.7	4.8		V
			Full range	4.7			4.7			
V_{OL}	Maximum low-level output voltage	I_O = 0	25°C		0	50		0	50	mV
			Full range			50			50	
A_{VD}	Large-signal differential voltage amplification	V_O = 1 V to 4 V, R_L = 500 kΩ	25°C	150	315		150	315		V/mV
			Full range	100			100			
		V_O = 1 V to 4 V, R_L = 10 kΩ	25°C	25	55		25	55		
			Full range	15			15			
CMRR	Common-mode rejection ratio	V_{IC} = V_{ICR}min, V_O = 0, R_S = 50 Ω	25°C	75	110		75	110		dB
			Full range	75			75			
k_{SVR}	Supply-voltage rejection ratio ($\Delta V_{DD\pm}/\Delta V_{IO}$)	V_{DD} = 4.6 V to 16 V	25°C	80	110		80	110		dB
			Full range	80			80			
I_{DD}	Supply current	V_O = 2.5 V, No load	25°C		1.7	2.6		1.7	2.6	mA
			Full range			2.6			2.6	

† Full range is 0°C to +70°C.

NOTE 4: Typical values are based on the input offset voltage shift observed through 168 hours of operating life test at T_A = 150°C extrapolated to T_A = 25°C using the Arrhenius equation and assuming an activation energy of 0.96 eV.

TLC2202C operating characteristics at specified free-air temperature, V_{DD} = 5 V

PARAMETER		TEST CONDITIONS	T_A†	TLC2202AC			TLC2202BC			UNIT
				MIN	TYP	MAX	MIN	TYP	MAX	
SR	Slew rate at unity gain	V_O = 0.5 V to 2.5 V, R_L = 10 kΩ, C_L = 100 pF	25°C	1.6	2.5		1.6	2.5		V/μs
			Full range	1.1			1.1			
V_n	Equivalent input noise voltage (see Note 5)	f = 10 Hz	25°C		18	35		18	30	nV/√Hz
		f = 1 kHz	25°C		8	15		8	12	
$V_{N(PP)}$	Peak-to-peak equivalent input noise voltage	f = 0.1 to 1 Hz	25°C		0.5			0.5		μV
		f = 0.1 to 10 Hz	25°C		0.7			0.7		
I_n	Equivalent input noise current		25°C		0.6			0.6		fA/√Hz
	Gain-bandwidth product	f = 10 kHz, R_L = 10 kΩ, C_L = 100 pF	25°C		1.9			1.9		MHz
ϕ_m	Phase margin at unity gain	R_L = 10 kΩ, C_L = 100 pF	25°C		47°			47°		

† Full range is 0°C to +70°C.

NOTE 5: This parameter is tested on a sample basis for the TLC2202A and on all devices for the TLC2202B. For other test requirements, please contact the factory. This statement has no bearing on testing or nontesting of other parameters.

TLC2201I electrical characteristics at specified free-air temperature, $V_{DD\pm}$ = ±5 V (unless otherwise noted)

PARAMETER		TEST CONDITIONS	T_A†	TLC2201I			UNIT
				MIN	TYP	MAX	
V_{IO}	Input offset voltage	V_{IC} = 0, R_S = 50 Ω	25°C		100	500	µV
			Full range			650	
α_{VIO}	Temperature coefficient of input offset voltage		Full range		0.5		µV/°C
	Input offset voltage long-term drift (see Note 4)		25°C		0.001	0.005	µV/mo
I_{IO}	Input offset current		25°C		0.5	60	pA
			Full range			150	
I_{IB}	Input bias current		25°C		1	60	pA
			Full range			150	
V_{ICR}	Common-mode input voltage range	R_S = 50 Ω	Full range	−5 to 2.7			V
V_{OM+}	Maximum positive peak output voltage swing	R_L = 10 kΩ	25°C	4.7	4.8		V
			Full range	4.7			
V_{OM-}	Maximum negative peak output voltage swing		25°C	−4.7	−4.9		V
			Full range	−4.7			
A_{VD}	Large-signal differential voltage amplification	V_O = ±4 V, R_L = 500 kΩ	25°C	400	560		V/mV
			Full range	250			
		V_O = ±4 V, R_L = 10 kΩ	25°C	90	100		
			Full range	65			
CMRR	Common-mode rejection ratio	V_{IC} = V_{ICR}min, V_O = 0, R_S = 50 Ω	25°C	90	115		dB
			Full range	85			
k_{SVR}	Supply voltage rejection ratio ($\Delta V_{DD\pm}/\Delta V_{IO}$)	$V_{DD\pm}$ = ±2.3 V to ±8 V	25°C	90	110		dB
			Full range	85			
I_{DD}	Supply current	V_O = 0, No load	25°C		1.1	1.5	mA
			Full range			1.5	

† Full range is −40°C to +85°C.

NOTE 4: Typical values are based on the input offset voltage shift observed through 168 hours of operating life test at T_A = 150°C extrapolated to T_A = 25°C using the Arrhenius equation and assuming an activation energy of 0.96 eV.

TLC2201I operating characteristics at specified free-air temperature, $V_{DD\pm}$ = ±5 V

PARAMETER		TEST CONDITIONS	T_A†	TLC2201I			UNIT
				MIN	TYP	MAX	
SR	Slew rate at unity gain	V_O = ±2.3 V, R_L = 10 kΩ, C_L = 100 pF	25°C	2	2.7		V/µs
			Full range	1.4			
V_n	Equivalent input noise voltage	f = 10 Hz	25°C		18		nV/√Hz
		f = 1 kHz	25°C		8		
$V_{N(PP)}$	Peak-to-peak equivalent input noise voltage	f = 0.1 to 1 Hz	25°C		0.5		µV
		f = 0.1 to 10 Hz	25°C		0.7		
I_n	Equivalent input noise current		25°C		0.6		fA/√Hz
	Gain-bandwidth product	f = 10 kHz, R_L = 10 kΩ, C_L = 100 pF	25°C		1.9		MHz
ϕ_m	Phase margin at unity gain	R_L = 10 kΩ, C_L = 100 pF	25°C		48°		

† Full range is −40°C to +85°C.

TLC2201I electrical characteristics at specified free-air temperature, $V_{DD\pm}$ = ±5 V (unless otherwise noted)

PARAMETER		TEST CONDITIONS	T_A†	TLC2201AI			TLC2201BI			UNIT
				MIN	TYP	MAX	MIN	TYP	MAX	
V_{IO}	Input offset voltage	V_{IC} = 0, R_S = 50 Ω	25°C		80	200		80	200	μV
			Full range			350			350	
α_{VIO}	Temperature coefficient of input offset voltage		Full range		0.5			0.5		μV/°C
	Input offset voltage long-term drift (see Note 4)		25°C		0.001	0.005		0.001	0.005	μV/mo
I_{IO}	Input offset current		25°C		0.5	60		0.5	60	pA
			Full range			150			150	
I_{IB}	Input bias current		25°C		1	60		1	60	pA
			Full range			150			150	
V_{ICR}	Common-mode input voltage range	R_S = 50 Ω	Full range	−5 to 2.7			−5 to 2.7			V
V_{OM+}	Maximum positive peak output voltage swing	R_L = 10 kΩ	25°C	4.7	4.8		4.7	4.8		V
			Full range	4.7			4.7			
V_{OM-}	Maximum negative peak output voltage swing		25°C	−4.7	−4.9		−4.7	−4.9		V
			Full range	−4.7			−4.7			
A_{VD}	Large-signal differential voltage amplification	V_O = ±4 V, R_L = 500 kΩ	25°C	400	560		400	560		V/mV
			Full range	250			250			
		V_O = ±4 V, R_L = 10 kΩ	25°C	90	100		90	100		
			Full range	65			65			
CMRR	Common-mode rejection ratio	V_{IC} = V_{ICR}min, V_O = 0, R_S = 50 Ω	25°C	90	115		90	115		dB
			Full range	85			85			
k_{SVR}	Supply voltage rejection ratio ($\Delta V_{DD\pm}/\Delta V_{IO}$)	$V_{DD\pm}$ = ±2.3 V to ±8 V	25°C	90	110		90	110		dB
			Full range	85			85			
I_{DD}	Supply current	V_O = 0, No load	25°C		1.1	1.5		1.1	1.5	mA
			Full range			1.5			1.5	

† Full range is −40°C to +85°C.

NOTE 4: Typical values are based on the input offset voltage shift observed through 168 hours of operating life test at T_A = 150 °C extrapolated to T_A = 25°C using the Arrhenius equation assuming an activation energy of 0.96 eV.

TLC2201I operating characteristics at specified free-air temperature, $V_{DD\pm}$ = ±5 V

PARAMETER		TEST CONDITIONS	T_A†	TLC2201AI			TLC2201BI			UNIT
				MIN	TYP	MAX	MIN	TYP	MAX	
SR	Slew rate at unity gain	V_O = ±2.3 V,	25°C	2	2.7		2	2.7		V/μs
		R_L = 10 kΩ, C_L = 100 pF	Full range	1.4			1.4			
V_n	Equivalent input noise voltage (see Note 5)	f = 10 Hz	25°C		18	35		18	30	nV/√Hz
		f = 1 kHz	25°C		8	15		8	12	
$V_{N(PP)}$	Peak-to-peak equivalent input noise voltage	f = 0.1 to 1 Hz	25°C		0.5			0.5		μV
		f = 0.1 to 10 Hz	25°C		0.7			0.7		
I_n	Equivalent input noise current		25°C		0.6			0.6		fA/√Hz
	Gain-bandwidth product	f = 10 kHz, R_L = 10 kΩ, C_L = 100 pF	25°C		1.9			1.9		MHz
ϕ_m	Phase margin at unity gain	R_L = 10 kΩ, C_L = 100 pF	25°C		48°			48°		

† Full range is −40°C to +85°C.

NOTE 5: This parameter is tested on a sample basis for the TLC2201A and on all devices for the TLC2201B. For other test requirements, please contact the factory. This statement has no bearing on testing or nontesting of other parameters.

TLC2201I electrical characteristics at specified free-air temperature, V_{DD} = 5 V (unless otherwise noted)

PARAMETER		TEST CONDITIONS	T_A†	TLC2201I			UNIT
				MIN	TYP	MAX	
V_{IO}	Input offset voltage	V_{IC} = 0, R_S = 50 Ω	25°C		100	500	μV
			Full range			650	
α_{VIO}	Temperature coefficient of input offset voltage		Full range		0.5		μV/°C
	Input offset voltage long-term drift (see Note 4)		25°C		0.001	0.005	μV/mo
I_{IO}	Input offset current		25°C		0.5	60	pA
			Full range			150	
I_{IB}	Input bias current		25°C		1	60	pA
			Full range			150	
V_{ICR}	Common-mode input voltage range	R_S = 50 Ω	Full range	0 to 2.7			V
V_{OH}	Maximum high-level output voltage	R_L = 10 kΩ	25°C	4.7	4.8		V
			Full range	4.7			
V_{OL}	Maximum low-level output voltage	I_O = 0	25°C		0	50	mV
			Full range			50	
A_{VD}	Large-signal differential voltage amplification	V_O = 1 V to 4 V, R_L = 500 kΩ	25°C	150	315		V/mV
			Full range	100			
		V_O = 1 V to 4 V, R_L = 10 kΩ	25°C	25	55		
			Full range	15			
CMRR	Common-mode rejection ratio	V_{IC} = V_{ICR}min, V_O = 0, R_S = 50 Ω	25°C	90	110		dB
			Full range	85			
k_{SVR}	Supply voltage rejection ratio ($\Delta V_{DD\pm}/\Delta V_{IO}$)	V_{DD} = 4.6 V to 16 V	25°C	90	110		dB
			Full range	85			
I_{DD}	Supply current	V_O = 2.5 V, No load	25°C		1	1.5	mA
			Full range			1.5	

† Full range is −40°C to +85°C.

NOTE 4: Typical values are based on the input offset voltage shift observed through 168 hours of operating life test at T_A = 150°C extrapolated to T_A = 25°C using the Arrhenius equation and assuming an activation energy of 0.96 eV.

TLC2201I operating characteristics at specified free-air temperature, V_{DD} = 5 V

PARAMETER		TEST CONDITIONS	T_A†	TLC2201I			UNIT
				MIN	TYP	MAX	
SR	Slew rate at unity gain	V_O = 0.5 V to 2.5 V, R_L = 10 kΩ,, C_L = 100 pF	25°C	1.8	2.5		V/μs
			Full range	1.2			
V_n	Equivalent input noise voltage	f = 10 Hz	25°C		18		nV/√Hz
		f = 1 kHz	25°C		8		
$V_{N(PP)}$	Peak-to-peak equivalent input noise voltage	f = 0.1 to 1 Hz	25°C		0.5		μV
		f = 0.1 to 10 Hz	25°C		0.7		
I_n	Equivalent input noise current		25°C		0.6		fA/√Hz
	Gain-bandwidth product	f = 10 kHz, R_L = 10 kΩ, C_L = 100 pF	25°C		1.8		MHz
ϕ_m	Phase margin at unity gain	R_L = 10 kΩ, C_L = 100 pF	25°C		45°		

† Full range is −40°C to +85°C.

TLC2201I electrical characteristics at specified free-air temperature, V_{DD} = 5 V (unless otherwise noted)

PARAMETER		TEST CONDITIONS	T_A†	TLC2201AI			TLC2201BI			UNIT
				MIN	TYP	MAX	MIN	TYP	MAX	
V_{IO}	Input offset voltage	V_{IC} = 0, R_S = 50 Ω	25°C		80	200		80	200	μA
			Full range			350			350	
α_{VIO}	Temperature coefficient of input offset voltage		Full range		0.5			0.5		μV/°C
	Input offset voltage long-term drift (see Note 4)		25°C		0.001	0.005		0.001	0.005	μV/mo
I_{IO}	Input offset current		25°C		0.5	60		0.5	60	pA
			Full range			150			150	
I_{IB}	Input bias current		25°C		1	60		1	60	pA
			Full range			150			150	
V_{ICR}	Common-mode input voltage range	R_S = 50 Ω	Full range	0 to 2.7			0 to 2.7			V
V_{OH}	Maximum high-level output voltage	R_L = 10 kΩ	25°C	4.7	4.8		4.7	4.8		V
			Full range	4.7			4.7			
V_{OL}	Maximum low-level output voltage	I_O = 0	25°C		0	50		0	50	mV
			Full range			50			50	
A_{VD}	Large-signal differential voltage amplification	V_O = 1 V to 4 V, R_L = 500 kΩ	25°C	150	315		150	315		V/mV
			Full range	100			100			
		V_O = 1 V to 4 V, R_L = 10 kΩ	25°C	25	55		25	55		
			Full range	15			15			
CMRR	Common-mode rejection ratio	V_{IC} = V_{ICR}min, V_O = 0, R_S = 50 Ω	25°C	90	110		90	110		dB
			Full range	85			85			
k_{SVR}	Supply voltage rejection ratio ($\Delta V_{DD\pm}/\Delta V_{IO}$)	V_{DD} = 4.6 V to 16 V	25°C	90	110		90	110		dB
			Full range	85			85			
I_{DD}	Supply current	V_O = 2.5 V, No load	25°C		1	1.5		1	1.5	mA
			Full range			1.5			1.5	

† Full range is −40°C to +85°C.

NOTE 4: Typical values are based on the input offset voltage shift observed through 168 hours of operating life test at T_A = 150°C extrapolated to T_A = 25°C using the Arrhenius equation and assuming an activation energy of 0.96 eV.

TLC2201I operating characteristics at specified free-air temperature, V_{DD} = 5 V

PARAMETER		TEST CONDITIONS	T_A†	TLC2201AI			TLC2201BI			UNIT
				MIN	TYP	MAX	MIN	TYP	MAX	
SR	Slew rate at unity gain	V_O = 0.5 V to 2.5 V, R_L = 10 kΩ, C_L = 100 pF	25°C	1.8	2.5		1.8	2.5		V/μs
			Full range	1.2			1.2			
V_n	Equivalent input noise voltage (see Note 5)	f = 10 Hz	25°C		18	35		18	30	nV/√Hz
		f = 1 kHz	25°C		8	15		8	12	
$V_{N(PP)}$	Peak-to-peak equivalent input noise voltage	f = 0.1 to 1 Hz	25°C		0.5			0.5		μV
		f = 0.1 to 10 Hz	25°C		0.7			0.7		
I_n	Equivalent input noise current		25°C		0.6			0.6		fA/√Hz
	Gain-bandwidth product	f = 10 kHz, R_L = 10 kΩ, C_L = 100 pF	25°C		1.8			1.8		MHz
ϕ_m	Phase margin at unity gain	R_L = 10 kΩ, C_L = 100 pF	25°C		45°			45°		

† Full range is −40°C to +85°C.

NOTE 5: This parameter is tested on a sample basis for the TLC2201A and on all devices for the TLC2201B. For other test requirements, please contact the factory. This statement has no bearing on testing or nontesting of other parameters.

TLC2202I electrical characteristics at specified free-air temperature, $V_{DD\pm}$ = ±5 V (unless otherwise noted)

PARAMETER		TEST CONDITIONS	T_A†	TLC2202I			UNIT
				MIN	TYP	MAX	
V_{IO}	Input offset voltage	V_{IC} = 0, R_S = 50 Ω	25°C		100	1000	μV
			Full range			1200	
α_{VIO}	Temperature coefficient of input offset voltage		Full range		0.5		μV/°C
	Input offset voltage long-term drift (see Note 4)		25°C		0.001	0.005	μV/mo
I_{IO}	Input offset current		25°C		0.5	60	pA
			Full range			150	
I_{IB}	Input bias current		25°C		1	60	pA
			Full range			150	
V_{ICR}	Common-mode input voltage range	R_S = 50 Ω	Full range	−5 to 2.7			V
V_{OM+}	Maximum positive peak output voltage swing	R_L = 10 kΩ	25°C	4.7	4.8		V
			Full range	4.7			
V_{OM-}	Maximum negative peak output voltage swing		25°C	−4.7	−4.9		
			Full range	−4.7			V
A_{VD}	Large-signal differential voltage amplification	V_O = ± 4 V, R_L = 500 kΩ	25°C	300	560		V/mV
			Full range	150			
		V_O = ± 4 V, R_L = 10 kΩ	25°C	50	100		
			Full range	25			
CMRR	Common-mode rejection ratio	V_O = 0, V_{IC} = V_{ICR}min, R_S = 50 Ω	25°C	80	115		dB
			Full range	80			
k_{SVR}	Supply-voltage rejection ratio ($\Delta V_{DD\pm}/\Delta V_{IO}$)	V_{DD} = ±2.3 V to ±8 V	25°C	80	110		dB
			Full range	80			
I_{DD}	Supply current	V_O = 0, No load	25°C		1.8	2.7	mA
			Full range			2.7	

† Full range is −40°C to +85°C.

NOTE 4: Typical values are based on the input offset voltage shift observed through 168 hours of operating life test at T_A = 150°C extrapolated to T_A = 25°C using the Arrhenius equation and assuming an activation energy of 0.96 eV.

TLC2202I operating characteristics at specified free-air temperature, $V_{DD\pm}$ = ±5 V

PARAMETER		TEST CONDITIONS	T_A†	TLC2202I			UNIT
				MIN	TYP	MAX	
SR	Slew rate at unity gain	V_O = ±2.3 V, R_L = 10 kΩ, C_L = 100 pF	25°C	1.8	2.7		V/μs
			Full range	1.2			
V_n	Equivalent input noise voltage	f = 10 Hz	25°C		18		nV/√Hz
		f = 1 kHz	25°C		8		
$V_{N(PP)}$	Peak-to-peak equivalent input noise voltage	f = 0.1 to 1 Hz	25°C		0.5		μV
		f = 0.1 to 10 Hz	25°C		0.7		
I_n	Equivalent input noise current		25°C		0.6		fA/√Hz
	Gain-bandwidth product	f = 10 kHz, R_L = 10 kΩ, C_L = 100 pF	25°C		1.9		MHz
ϕ_m	Phase margin at unity gain	R_L = 10 kΩ, C_L = 100 pF	25°C		48°		

† Full range is −40°C to +85°C.

TLC2202I electrical characteristics at specified free-air temperature, $V_{DD\pm}$ = ±5 V (unless otherwise noted)

PARAMETER		TEST CONDITIONS	T_A†	TLC2202AI			TLC2202BI			UNIT
				MIN	TYP	MAX	MIN	TYP	MAX	
V_{IO}	Input offset voltage	V_{IC} = 0, R_S = 50 Ω	25°C		80	500		80	500	μV
			Full range			700			700	
α_{VIO}	Temperature coefficient of input offset voltage		Full range		0.5			0.5		μV/°C
	Input offset voltage long-term drift (see Note 4)		25°C		0.001	0.005		0.001	0.005	μV/mo
I_{IO}	Input offset current		25°C		0.5	60		0.5	60	pA
			Full range			150			150	
I_{IB}	Input bias current		25°C		1	60		1	60	pA
			Full range			150			150	
V_{ICR}	Common-mode input voltage range	R_S = 50 Ω	Full range	−5 to 2.7			−5 to 2.7			V
V_{OM+}	Maximum positive peak output voltage swing	R_L = 10 kΩ	25°C	4.7	4.8		4.7	4.8		V
			Full range	4.7			4.7			
V_{OM-}	Maximum negative peak output voltage swing		25°C	−4.7	−4.9		−4.7	−4.9		V
			Full range	−4.7			−4.7			
A_{VD}	Large-signal differential voltage amplification	V_O = ±4 V, R_L = 500 kΩ	25°C	300	560		300	560		V/mV
			Full range	150			150			
		V_O = ±4 V, R_L = 10 kΩ	25°C	50	100		50	100		
			Full range	25			25			
CMRR	Common-mode rejection ratio	V_{IC} = V_{ICR}min, V_O = 0, R_S = 50 Ω	25°C	80	115		80	115		dB
			Full range	80			80			
k_{SVR}	Supply-voltage rejection ratio ($\Delta V_{DD\pm}/\Delta V_{IO}$)	$V_{DD\pm}$ ±2.3 V to ±8 V	25°C	80	110		80	110		dB
			Full range	80			80			
I_{DD}	Supply current	V_O = 0, No load	25°C		1.8	2.7		1.8	2.7	mA
			Full range			2.7			2.7	

† Full range is −40°C to +85°C.

NOTE 4: Typical values are based on the input offset voltage shift observed through 168 hours of operating life test at T_A = 150°C extrapolated to T_A = 25°C using the Arrhenius equation and assuming an activation energy of 0.96 eV.

TLC2202I operating characteristics at specified free-air temperature, $V_{DD\pm}$ = ±5 V

PARAMETER		TEST CONDITIONS	T_A†	TLC2202AI			TLC2202BI			UNIT
				MIN	TYP	MAX	MIN	TYP	MAX	
SR	Slew rate at unity gain	V_O = ±2.3 V, R_L = 10 kΩ, C_L = 100 pF	25°C	1.8	2.7		1.8	2.7		V/μs
			Full range	1.2			1.2			
V_n	Equivalent input noise voltage (see Note 5)	f = 10 Hz	25°C		18	35		18	30	nV/√Hz
		f = 1 kHz	25°C		8	15		8	12	
$V_{N(PP)}$	Peak-to-peak equivalent input noise voltage	f = 0.1 to 1 Hz	25°C		0.5			0.5		μV
		f = 0.1 to 10 Hz	25°C		0.7			0.7		
I_n	Equivalent input noise current		25°C		0.6			0.6		fA/√Hz
	Gain-bandwidth product	f = 10 kHz, R_L = 10 kΩ, C_L = 100 pF	25°C		1.9			1.9		MHz
ϕ_m	Phase margin at unity gain	R_L = 10 kΩ, C_L = 100 pF	25°C		48°			48°		

† Full range is −40°C to +85°C.

NOTE 5: This parameter is tested on a sample basis for the TLC2202A and on all devices for the TLC2202B. For other test requirements, please contact the factory. This statement has no bearing on testing or nontesting of other parameters.

TLC2202I electrical characteristics at specified free-air temperature, V_{DD} = 5 V (unless otherwise noted)

PARAMETER		TEST CONDITIONS	T_A†	TLC2202I			UNIT
				MIN	TYP	MAX	
V_{IO}	Input offset voltage	V_{IC} = 0, R_S = 50 Ω	25°C		100	1000	µV
			Full range			1200	
α_{VIO}	Temperature coefficient of input offset voltage		Full range		0.5		µV/°C
	Input offset voltage long-term drift (see Note 4)		25°C		0.001	0.005	µV/mo
I_{IO}	Input offset current		25°C		0.5	60	pA
			Full range			150	
I_{IB}	Input bias current		25°C		1	60	pA
			Full range			150	
V_{ICR}	Common-mode input voltage range	R_S = 50 Ω	Full range	0 to 2.7			V
V_{OH}	Maximum high-level output voltage	R_L = 10 kΩ	25°C	4.7	4.8		V
			Full range	4.7			
V_{OL}	Maximum low-level output voltage	I_O = 0	25°C		0	50	mV
			Full range			50	
A_{VD}	Large-signal differential voltage amplification	V_O =1 V to 4 V, R_L = 500 kΩ	25°C	150	315		V/mV
			Full range	100			
		V_O = 1 V to 4 V, R_L = 10 kΩ	25°C	25	55		
			Full range	15			
CMRR	Common-mode rejection ratio	V_O = 0, V_{IC} = V_{ICR}min, R_S = 50 Ω	25°C	75	110		dB
			Full range	75			
k_{SVR}	Supply-voltage rejection ratio ($\Delta V_{DD\pm}/\Delta V_{IO}$)	V_{DD}= 4.6 V to 16 V	25°C	80	110		dB
			Full range	80			
I_{DD}	Supply current	V_O = 2.5 V, No load	25°C		1.7	2.6	mA
			Full range			2.6	

† Full range is −40°C to +85°C.

NOTE 4: Typical values are based on the input offset voltage shift observed through 168 hours of operating life test at T_A = 150°C extrapolated to T_A = 25°C using the Arrhenius equation and assuming an activation energy of 0.96 eV.

TLC2202I operating characteristics at specified free-air temperature, V_{DD} = 5 V

PARAMETER		TEST CONDITIONS	T_A†	TLC2202I			UNIT
				MIN	TYP	MAX	
SR	Slew rate at unity gain	V_O = 0.5 V to 2.5 V, R_L = 10 kΩ, C_L = 100 pF	25°C	1.6	2.5		V/µs
			Full range	1			
V_n	Equivalent input noise voltage	f = 10 Hz	25°C		18		nV/√Hz
		f = 1 kHz	25°C		8		
$V_{N(PP)}$	Peak-to-peak equivalent input noise voltage	f = 0.1 to 1 Hz	25°C		0.5		µV
		f = 0.1 to 10 Hz	25°C		0.7		
I_n	Equivalent input noise current		25°C		0.6		fA/√Hz
	Gain-bandwidth product	f = 10 kHz, R_L = 10 kΩ, C_L = 100 pF	25°C		1.9		MHz
ϕ_m	Phase margin at unity gain	R_L = 10 kΩ, C_L = 100 pF	25°C		47°		

† Full range is −40°C to +85°C.

TLC2202I electrical characteristics at specified free-air temperature, V_{DD} = 5 V (unless otherwise noted)

PARAMETER		TEST CONDITIONS	T_A†	TLC2202AI			TLC2202BI			UNIT
				MIN	TYP	MAX	MIN	TYP	MAX	
V_{IO}	Input offset voltage	V_{IC} = 0, R_S = 50 Ω	25°C		80	500		80	500	μV
			Full range			700			700	
α_{VIO}	Temperature coefficient of input offset voltage		Full range		0.5			0.5		μV/°C
	Input offset voltage long-term drift (see Note 4)		25°C		0.001	0.005		0.001	0.005	μV/mo
I_{IO}	Input offset current		25°C		0.5	60		0.5	60	pA
			Full range			150			150	
I_{IB}	Input bias current		25°C		1	60		1	60	pA
			Full range			150			150	
V_{ICR}	Common-mode input voltage range	R_S = 50 Ω	Full range	0 to 2.7			0 to 2.7			V
V_{OH}	Maximum high-level output voltage	R_L = 10 kΩ	25°C	4.7	4.8		4.7	4.8		V
			Full range	4.7			4.7			
V_{OL}	Maximum low-level output voltage	I_O = 0	25°C		0	50		0	50	mV
			Full range			50			50	
A_{VD}	Large-signal differential voltage amplification	V_O = 1 V to 4 V, R_L = 500 kΩ	25°C	150	315		150	315		V/mV
			Full range	100			100			
		V_O =1 V to 4 V, R_L = 10 kΩ	25°C	25	55		25	55		
			Full range	15			15			
CMRR	Common-mode rejection ratio	V_{IC} = V_{ICR}min, V_O = 0, R_S = 50 Ω	25°C	75	110		75	110		dB
			Full range	75			75			
k_{SVR}	Supply-voltage rejection ratio ($\Delta V_{DD\pm}/\Delta V_{IO}$)	V_{DD} = 4.6 V to 16 V	25°C	80	110		80	110		dB
			Full range	80			80			
I_{DD}	Supply current	V_O = 2.5 V, No load	25°C		1.7	2.6		1.7	2.6	mA
			Full range			2.6			2.6	

† Full range is −40°C to +85°C

NOTE 4: Typical values are based on the input offset voltage shift observed through 168 hours of operating life test at T_A = 150°C extrapolated to T_A = 25°C using the Arrhenius equation and assuming an activation energy of 0.96 eV.

TLC2202I operating characteristics at specified free-air temperature, V_{DD} = 5 V

PARAMETER		TEST CONDITIONS	T_A†	TLC2202AI			TLC2202BI			UNIT
				MIN	TYP	MAX	MIN	TYP	MAX	
SR	Slew rate at unity gain	V_O = 0.5 V to 2.5 V, R_L = 10 kΩ, C_L = 100 pF	25°C	1.6	2.5		1.6	2.5		V/μs
			Full range	1			1			
V_n	Equivalent input noise voltage (see Note 5)	f = 10 Hz	25°C		18	35		18	30	nV/√Hz
		f = 1 kHz	25°C		8	15		8	12	
$V_{N(PP)}$	Peak-to-peak equivalent input noise voltage	f = 0.1 to 1 Hz	25°C		0.5			0.5		μV
		f = 0.1 to 10 Hz	25°C		0.7			0.7		
I_n	Equivalent input noise current		25°C		0.6			0.6		fA/√Hz
	Gain-bandwidth product	f = 10 kHz, R_L = 10 kΩ, C_L = 100 pF	25°C		1.9			1.9		MHz
ϕ_m	Phase margin at unity gain	R_L = 10 kΩ, C_L = 100 pF	25°C		47°			47°		

† Full range is −40°C to +85°C

NOTE 5: This parameter is tested on a sample basis for the TLC2202A and on all devices for the TLC2202B. For other test requirements, please contact the factory. This statement has no bearing on testing or nontesting of other parameters.

TLC2201M electrical characteristics at specified free-air temperature, $V_{DD\pm}$ = ±5 V (unless otherwise noted)

PARAMETER		TEST CONDITIONS	T_A†	TLC2201M			UNIT
				MIN	TYP	MAX	
V_{IO}	Input offset voltage	V_{IC} = 0, R_S = 50 Ω	25°C		100	500	μV
			Full range			700	
α_{VIO}	Temperature coefficient of input offset voltage		Full range		0.5		μV/°C
	Input offset voltage long-term drift (see Note 4)		25°C		0.001	0.005	μV/mo
I_{IO}	Input offset current		25°C		0.5	60	pA
			Full range			500	
I_{IB}	Input bias current		25°C		1	60	pA
			Full range			500	
V_{ICR}	Common-mode input voltage range	R_S = 50 Ω	Full range	−5 to 2.7			V
V_{OM+}	Maximum positive peak output voltage swing	R_L = 10 kΩ	25°C	4.7	4.8		V
			Full range	4.7			
V_{OM-}	Maximum negative peak output voltage swing		25°C	−4.7	−4.9		V
			Full range	−4.7			
A_{VD}	Large-signal differential voltage amplification	V_O = ±4 V, R_L = 500 kΩ	25°C	400	560		V/mV
			Full range	200			
		V_O = ±4 V, R_L = 10 kΩ	25°C	90	100		
			Full range	45			
CMRR	Common-mode rejection ratio	V_{IC} = V_{ICR}min, V_O = 0, R_S = 50 Ω	25°C	90	115		dB
			Full range	85			
k_{SVR}	Supply voltage rejection ratio ($\Delta V_{DD\pm}/\Delta V_{IO}$)	$V_{DD\pm}$ = ±2.3 V to ±8 V	25°C	90	110		dB
			Full range	85			
I_{DD}	Supply current	V_O = 0, No load	25°C		1.1	1.5	mA
			Full range			1.5	

† Full range is −55°C to 125°C.

NOTE 4: Typical values are based on the input offset voltage shift observed through 168 hours of operating life test at T_A = 150°C extrapolated to T_A = 25°C using the Arrhenius equation and assuming an activation energy of 0.96 eV.

TLC2201M operating characteristics at specified free-air temperature, $V_{DD\pm}$ = ±5 V

PARAMETER		TEST CONDITIONS	T_A†	TLC2201M			UNIT
				MIN	TYP	MAX	
SR	Slew rate at unity gain	V_O = ±2.3 V, R_L = 10 kΩ, C_L = 100 pF	25°C	2	2.7		V/μs
			Full range	1.3			
V_n	Equivalent input noise voltage	f = 10 Hz	25°C		18		nV/√Hz
		f = 1 kHz	25°C		8		
$V_{N(PP)}$	Peak-to-peak equivalent input noise voltage	f = 0.1 to 1 Hz	25°C		0.5		μV
		f = 0.1 to 10 Hz	25°C		0.7		
I_n	Equivalent input noise current		25°C		0.6		fA/√Hz
	Gain-bandwidth product	f = 10 kHz, R_L = 10 kΩ, C_L = 100 pF	25°C		1.9		MHz
ϕ_m	Phase margin	R_L = 10 kΩ, C_L = 100 pF	25°C		48°		

† Full range is −55°C to 125°C.

TLC2201M electrical characteristics at specified free-air temperature, $V_{DD\pm}$ = ±5 V (unless otherwise noted)

PARAMETER		TEST CONDITIONS	T_A†	TLC2201AM			TLC2201BM			UNIT
				MIN	TYP	MAX	MIN	TYP	MAX	
V_{IO}	Input offset voltage	V_{IC} = 0, R_S = 50 Ω	25°C		80	200		80	200	μV
			Full range			400			400	
α_{VIO}	Temperature coefficient of input offset voltage		Full range		0.5			0.5		μV/°C
	Input offset voltage long-term drift (see Note 4)		25°C		0.001	0.005		0.001	0.005	μV/mo
I_{IO}	Input offset current		25°C		0.5	60		0.5	60	pA
			Full range			500			500	
I_{IB}	Input bias current		25°C		1	60		1	60	pA
			Full range			500			500	
V_{ICR}	Common-mode input voltage range	R_S = 50 Ω	Full range	−5 to 2.7			−5 to 2.7			V
V_{OM+}	Maximum positive peak output voltage swing	R_L = 10 kΩ	25°C	4.7	4.8		4.7	4.8		V
			Full range	4.7			4.7			
V_{OM-}	Maximum negative peak output voltage swing		25°C	−4.7	−4.9		−4.7	−4.9		V
			Full range	−4.7			−4.7			
A_{VD}	Large-signal differential voltage amplification	V_O = ±4 V, R_L = 500 kΩ	25°C	400	560		400	560		V/mV
			Full range	200			200			
		V_O = ±4 V, R_L = 10 kΩ	25°C	90	100		90	100		
			Full range	45			45			
CMRR	Common-mode rejection ratio	V_{IC} = V_{ICR}min, V_O = 0, R_S = 50 Ω	25°C	90	115		90	115		dB
			Full range	85			85			
k_{SVR}	Supply voltage rejection ratio ($\Delta V_{DD\pm}/\Delta V_{IO}$)	$V_{DD\pm}$ = ±2.3 V to ±8 V	25°C	90	110		90	110		dB
			Full range	85			85			
I_{DD}	Supply current	V_O = 0, No load	25°C		1.1	1.5		1.1	1.5	mA
			Full range			1.5			1.5	

† Full range is −55°C to 125°C.

NOTE 4: Typical values are based on the input offset voltage shift observable through 168 hours of operating life test at T_A = 150°C extrapolated to T_A = 25°C using the Arrhenius equation and assuming an activation energy of 0.96 eV.

TLC2201M operating characteristics at specified free-air temperature, $V_{DD\pm}$ = ±5 V

PARAMETER		TEST CONDITIONS	T_A†	TLC2201AM			TLC2201BM			UNIT
				MIN	TYP	MAX	MIN	TYP	MAX	
SR	Slew rate at unity gain	V_O = ±2.3 V, R_L = 10 kΩ, C_L = 100 pF	25°C	2	2.7		2	2.7		V/μs
			Full range	1.3			1.3			
V_n	Equivalent input noise voltage (see Note 5)	f = 10 Hz	25°C		18	35		18	30	nV/√Hz
		f = 1 kHz	25°C		8	15		8	12	
$V_{N(PP)}$	Peak-to-peak equivalent input noise voltage	f = 0.1 to 1 Hz	25°C		0.5			0.5		μV
		f = 0.1 to 10 Hz	25°C		0.7			0.7		
I_n	Equivalent input noise current		25°C		0.6			0.6		fA/√Hz
	Gain-bandwidth product	f = 10 kHz, R_L = 10 kΩ, C_L = 100 pF	25°C		1.9			1.9		MHz
ϕ_m	Phase margin at unity gain	R_L = 10 kΩ, C_L = 100 pF	25°C		48°			48°		

† Full range is −55°C to 125°C.

NOTE 5: This parameter is tested on a sample basis for the TLC2201A and on all devices for the TLC2201B. For other test requirements, please contact the factory. This statement has no bearing on testing or nontesting of other parameters.

TLC2201M electrical characteristics at specified free-air temperature, V_{DD} = 5 V (unless otherwise noted)

PARAMETER		TEST CONDITIONS	T_A†	TLC2201M			UNIT
				MIN	TYP	MAX	
V_{IO}	Input offset voltage	V_{IC} = 0, R_S = 50 Ω	25°C		100	500	μV
			Full range			700	
α_{VIO}	Temperature coefficient of input offset voltage		Full range		0.5		μV/°C
	Input offset voltage long-term drift (see Note 4)		25°C		0.001	0.005*	μV/mo
I_{IO}	Input offset current		25°C		0.5	60	pA
			Full range			500	
I_{IB}	Input bias current		25°C		1	60	pA
			Full range			500	
V_{ICR}	Common-mode input voltage range	R_S = 50 Ω	Full range	0 to 2.7			V
V_{OH}	Maximum high-level output voltage	R_L = 10 kΩ	25°C	4.7	4.8		V
			Full range	4.7			
V_{OL}	Maximum low-level output voltage	I_O = 0	25°C		0	50	mV
			Full range			50	
A_{VD}	Large-signal differential voltage amplification	V_O = 1 V to 4 V, R_L = 500 kΩ	25°C	150	315		V/mV
			Full range	75			
		V_O = 1 V to 4 V, R_L = 10 kΩ	25°C	25	55		
			Full range	10			
CMRR	Common-mode rejection ratio	V_{IC} = V_{ICR}min, V_O = 0, R_S = 50 Ω	25°C	90	110		dB
			Full range	85			
k_{SVR}	Supply voltage rejection ratio ($\Delta V_{DD\pm}/\Delta V_{IO}$)	V_{DD} = 4.6 V to 16 V	25°C	90	110		dB
			Full range	85			
I_{DD}	Supply current	V_O = 2.5 V, No load	25°C		1	1.5	mA
			Full range			1.5	

*On products compliant to MIL-PRF-38535, Class B, this parameter is not production tested.
† Full range is −55°C to 125°C.
NOTE 4: Typical values are based on the input offset voltage shift observed through 168 hours of operating life test at T_A = 150°C extrapolated to T_A = 25°C using the Arrhenius equation and assuming an activation energy of 0.96 eV.

TLC2201M operating characteristics at specified free-air temperature, V_{DD} = 5 V

PARAMETER		TEST CONDITIONS	T_A†	TLC2201M			UNIT
				MIN	TYP	MAX	
SR	Slew rate at unity gain	V_O = 0.5 V to 2.5 V, R_L = 10 kΩ, C_L = 100 pF	25°C	1.8	2.5		V/μs
			Full range	1.1			
V_n	Equivalent input noise voltage	f = 10 Hz	25°C		18		nV/√Hz
		f = 1 kHz	25°C		8		
$V_{N(PP)}$	Peak-to-peak equivalent input noise voltage	f = 0.1 to 1 Hz	25°C		0.5		μV
		f = 0.1 to 10 Hz	25°C		0.7		
I_n	Equivalent input noise current		25°C		0.6		fA/√Hz
	Gain-bandwidth product	f = 10 kHz, R_L = 10 kΩ, C_L = 100 pF	25°C		1.8		MHz
ϕ_m	Phase margin at unity gain	R_L = 10 kΩ, C_L = 100 pF	25°C		45°		

† Full range is −55°C to 125°C.

TLC2201M electrical characteristics at specified free-air temperature, V_{DD} = 5 V (unless otherwise noted)

PARAMETER		TEST CONDITIONS	T_A†	TLC2201AM			TLC2201BM			UNIT
				MIN	TYP	MAX	MIN	TYP	MAX	
V_{IO}	Input offset voltage	V_{IC} = 0, R_S = 50 Ω	25°C		80	200		80	200	μV
			Full range			400			400	
α_{VIO}	Temperature coefficient of input offset voltage		Full range		0.5			0.5		μV/°C
	Input offset voltage long-term drift (see Note 4)		25°C		0.001	0.005		0.001	0.005	μV/mo
I_{IO}	Input offset current		25°C		0.5	60		0.5	60	pA
			Full range			500			500	
I_{IB}	Input bias current		25°C		1	60		1	60	pA
			Full range			500			500	
V_{ICR}	Common-mode input voltage range	R_S = 50 Ω	Full range	0 to 2.7			0 to 2.7			V
V_{OH}	Maximum high-level output voltage	R_L = 10 kΩ	25°C	4.7	4.8		4.7	4.8		V
			Full range	4.7			4.7			
V_{OL}	Maximum low-level output voltage	I_O = 0	25°C		0	50		0	50	V
			Full range			50			50	
A_{VD}	Large-signal differential voltage amplification	V_O = 1 V to 4 V, R_L = 500 kΩ	25°C	150	315		150	315		V/mV
			Full range	75			75			
		V_O = 1 V to 4 V, R_L = 10 kΩ	25°C	25	55		25	55		
			Full range	10			10			
CMRR	Common-mode rejection ratio	V_{IC} = V_{ICR}min, V_O = 0, R_S = 50 Ω	25°C	90	110		90	110		dB
			Full range	85			85			
k_{SVR}	Supply voltage rejection ratio ($\Delta V_{DD\pm}/\Delta V_{IO}$)	V_{DD} = 4.6 V to 16 V	25°C	90	110		90	110		dB
			Full range	85			85			
I_{DD}	Supply current	V_O = 2.5 V, No load	25°C		1.1	1.5		1.1	1.5	mA
			Full range			1.5			1.5	

† Full range is −55°C to 125°C.

NOTE 4: Typical values are based on the input offset voltage shift observable through 168 hours of operating life test at T_A = 150°C extrapolated to T_A = 25°C using the Arrhenius equation and assuming an activation energy of 0.96 eV.

TLC2201M operating characteristics at specified free-air temperature, V_{DD} = 5 V

PARAMETER		TEST CONDITIONS	T_A†	TLC2201AM			TLC2201BM			UNIT
				MIN	TYP	MAX	MIN	TYP	MAX	
SR	Slew rate at unity gain	V_O = 0.5 V to 2.5 V, R_L = 10 kΩ, C_L = 100 pF	25°C	1.8	2.5		1.8	2.5		V/μs
			Full range	1.1			1.1			
V_n	Equivalent input noise voltage (see Note 5)	f = 10 Hz	25°C		18	35		18	30	nV/√Hz
		f = 1 kHz	25°C		8	15		8	12	
$V_{N(PP)}$	Peak-to-peak equivalent input noise voltage	f = 0.1 to 1 Hz	25°C		0.5			0.5		μV
		f = 0.1 to 10 Hz	25°C		0.7			0.7		
I_n	Equivalent input noise current		25°C		0.6			0.6		fA/√Hz
	Gain-bandwidth product	f = 10 kHz, R_L = 10 kΩ, C_L = 100 pF	25°C		1.8			1.8		MHz
ϕ_m	Phase margin at unity gain	R_L = 10 kΩ, C_L = 100 pF	25°C		45°			45°		

† Full range is −55°C to 125°C.

NOTE 5: This parameter is tested on a sample basis for the TLC2201A and on all devices for the TLC2201B. For other test requirements, please contact the factory. This statement has no bearing on testing or nontesting of other parameters.

TLC2202M electrical characteristics at specified free-air temperature, $V_{DD\pm}$ = ±5 V (unless otherwise noted)

PARAMETER		TEST CONDITIONS	T_A†	TLC2202M			UNIT
				MIN	TYP	MAX	
V_{IO}	Input offset voltage	V_{IC} = 0, R_S = 50 Ω	25°C		100	1000	µV
			Full range			1250	
α_{VIO}	Temperature coefficient of input offset voltage		Full range		0.5		µV/°C
	Input offset voltage long-term drift (see Note 4)		25°C		0.001	0.005	µV/mo
I_{IO}	Input offset current		25°C		0.5	60	pA
			Full range			500	
I_{IB}	Input bias current		25°C		1	60	pA
			Full range			500	
V_{ICR}	Common-mode input voltage range	R_S = 50 Ω	Full range	−5 to 2.7			V
V_{OM+}	Maximum positive peak output voltage swing	R_L = 10 kΩ	25°C	4.7	4.8		V
			Full range	4.7			
V_{OM-}	Maximum negative peak output voltage swing		25°C	−4.7	−4.9		
			Full range	−4.7			V
A_{VD}	Large-signal differential voltage amplification	V_O =1 V to 4 V, R_L = 500 kΩ	25°C	300	560		V/mV
			Full range	100			
		V_O = 1 V to 4 V, R_L = 10 kΩ	25°C	50	100		
			Full range	25			
CMRR	Common-mode rejection ratio	V_O = 0, V_{IC} = V_{ICR}min, R_S = 50 Ω	25°C	80	115		dB
			Full range	80			
k_{SVR}	Supply-voltage rejection ratio ($\Delta V_{DD\pm}/\Delta V_{IO}$)	V_{DD}= ±2.3 V to ±8 V	25°C	80	110		dB
			Full range	80			
I_{DD}	Supply current	V_O = 0, No load	25°C		1.8	2.7	mA
			Full range			2.7	

*On products compliant to MIL-PRF-38535, Class B, this parameter is not production tested.
† Full range is −55°C to 125°C.
NOTE 4: Typical values are based on the input offset voltage shift observed through 168 hours of operating life test at T_A = 150°C extrapolated to T_A = 25°C using Arrhenius equation and assuming an activation energy of 0.96 eV.

TLC2202M operating characteristics at specified free-air temperature, $V_{DD\pm}$ = ±5 V

PARAMETER		TEST CONDITIONS	T_A†	TLC2202M			UNIT
				MIN	TYP	MAX	
SR	Slew rate at unity gain	V_O = ±2.3 V, R_L = 10 kΩ, C_L = 100 pF	25°C	1.8	2.7		V/µs
			Full range	1.1			
V_n	Equivalent input noise voltage	f = 10 Hz	25°C		18		nV/√Hz
		f = 1 kHz	25°C		8		
$V_{N(PP)}$	Peak-to-peak equivalent input noise voltage	f = 0.1 to 1 Hz	25°C		0.5		µV
		f = 0.1 to 10 Hz	25°C		0.7		
I_n	Equivalent input noise current		25°C		0.6		fA/√Hz
	Gain-bandwidth product	f = 10 kHz, R_L = 10 kΩ, C_L = 100 pF	25°C		1.9		MHz
ϕ_m	Phase margin at unity gain	R_L = 10 kΩ, C_L = 100 pF	25°C		48°		

† Full range is −55°C to 125°C.

TLC2202M electrical characteristics at specified free-air temperature, $V_{DD\pm}$ = ±5 V (unless otherwise noted)

PARAMETER		TEST CONDITIONS	T_A†	TLC2202AM			TLC2202BM			UNIT
				MIN	TYP	MAX	MIN	TYP	MAX	
V_{IO}	Input offset voltage	V_{IC} = 0, R_S = 50 Ω	25°C		80	500		80	500	μV
			Full range			750			750	
α_{VIO}	Temperature coefficient of input offset voltage		Full range		0.5			0.5		μV/°C
	Input offset voltage long-term drift (see Note 4)		25°C		0.001	0.005*		0.001	0.005*	μV/mo
I_{IO}	Input offset current		25°C		0.5	60		0.5	60	pA
			Full range			500			500	
I_{IB}	Input bias current		25°C		1	60		1	60	pA
			Full range			500			500	
V_{ICR}	Common-mode input voltage range	R_S = 50 Ω	Full range	−5 to 2.7			−5 to 2.7			V
V_{OM+}	Maximum positive peak output voltage swing	R_L = 10 kΩ	25°C	4.7	4.8		4.7	4.8		V
			Full range	4.7			4.7			
V_{OM-}	Maximum negative peak output voltage swing		25°C	−4.7	−4.9		−4.7	−4.9		V
			Full range	−4.7			−4.7			
A_{VD}	Large-signal differential voltage amplification	V_O = ±4 V, R_L = 500 kΩ	25°C	300	560		300	560		V/mV
			Full range	100			100			
		V_O = ±4 V, R_L = 10 kΩ	25°C	50	100		50	100		
			Full range	25			25			
CMRR	Common-mode rejection ratio	V_O = 0, V_{IC} = V_{ICR}min, R_S = 50 Ω	25°C	80	115		80	115		dB
			Full range	80			80			
k_{SVR}	Supply-voltage rejection ratio ($\Delta V_{DD\pm}/\Delta V_{IO}$)	$V_{DD\pm}$ = ±2.3 V to ±8 V	25°C	80	110		80	110		dB
			Full range	80			80			
I_{DD}	Supply current	V_O = 0, No load	25°C		1.8	2.7		1.8	2.7	mA
			Full range			2.7			2.7	

*On products compliant to MIL-PRF-38535, Class B, this parameter is not production tested.
† Full range is −55°C to 125°C.
NOTE 4: Typical values are based on the input offset voltage shift observed through 168 hours of operating life test at T_A = 150°C extrapolated to T_A = 25°C using the Arrhenius equation and assuming an activation energy of 0.96 eV.

TLC2202M operating characteristics at specified free-air temperature, $V_{DD\pm}$ = ±5 V

PARAMETER		TEST CONDITIONS	T_A†	TLC2202AM			TLC2202BM			UNIT
				MIN	TYP	MAX	MIN	TYP	MAX	
SR	Slew rate at unity gain	V_O = ±2.3 V, R_L = 10 kΩ, C_L = 100 pF	25°C	1.8	2.7		1.8	2.7		V/μs
			Full range	1.1			1.1			
V_n	Equivalent input noise voltage (see Note 5)	f = 10 Hz	25°C		18	35*		18	30*	nV/√Hz
		f = 1 kHz	25°C		8	15*		8	12*	
$V_{N(PP)}$	Peak-to-peak equivalent input noise voltage	f = 0.1 to 1 Hz	25°C		0.5			0.5		μV
		f = 0.1 to 10 Hz	25°C		0.7			0.7		
I_n	Equivalent input noise current		25°C		0.6			0.6		fA/√Hz
	Gain-bandwidth product	f = 10 kHz, R_L = 10 kΩ, C_L = 100 pF	25°C		1.9			1.9		MHz
ϕ_m	Phase margin at unity gain	R_L = 10 kΩ, C_L = 100 pF	25°C		48°			48°		

*On products compliant to MIL-PRF-38535, Class B, this parameter is not production tested.
† Full range is −55°C to 125°C.
NOTE 5: This parameter is tested on a sample basis for the TLC2202A and on all devices for the TLC2202B. For other test requirements, please contact the factory. This statement has no bearing on testing or nontesting of other parameters.

TLC2202M electrical characteristics at specified free-air temperatures, V_{DD} = 5 V (unless otherwise noted)

PARAMETER		TEST CONDITIONS	T_A†	TLC2202M			UNIT
				MIN	TYP	MAX	
V_{IO}	Input offset voltage	V_{IC} = 0, R_S = 50 Ω	25°C		100	1000	μV
			Full range			1250	
α_{VIO}	Temperature coefficient of input offset voltage		Full range		0.5		μV/°C
	Input offset voltage long-term drift (see Note 4)		25°C		0.001	0.005*	μV/mo
I_{IO}	Input offset current		25°C		0.5	60	pA
			Full range			500	
I_{IB}	Input bias current		25°C		1	60	pA
			Full range			500	
V_{ICR}	Common-mode input voltage range	R_S = 50 Ω	Full range	0 to 2.7			V
V_{OH}	Maximum high-level output voltage	R_L = 10 kΩ	25°C	4.7	4.8		V
			Full range	4.7			
V_{OL}	Maximum low-level output voltage	I_O = 0	25°C		0	50	mV
			Full range			50	
A_{VD}	Large-signal differential voltage amplification	V_O = 1 V to 4 V, R_L = 500 kΩ	25°C	150	315		V/mV
			Full range	75			
		V_O = 1 V to 4 V, R_L = 10 kΩ	25°C	25	55		
			Full range	10			
CMRR	Common-mode rejection ratio	V_{IC} = V_{ICR}min, R_S = 50 Ω	25°C	75	110		dB
			Full range	75			
k_{SVR}	Supply-voltage rejection ratio ($\Delta V_{DD\pm}/\Delta V_{IO}$)	V_{DD} = 4.6 V to 16 V	25°C	80	110		dB
			Full range	80			
I_{DD}	Supply current	V_O = 2.5 V, No load	25°C		1.7	2.6	mA
			Full range			2.6	

*On products compliant to MIL-PRF-38535, Class B, this parameter is not production tested.
† Full range is −55°C to 125°C.
NOTE 4: Typical values are based on the input offset voltage shift observed through 168 hours of operating life test at T_A = 150°C extrapolated to T_A = 25°C using the Arrhenius equation and assuming an activation energy of 0.96 eV.

TLC2202M operating characteristics at specified free-air temperature, V_{DD} = 5 V

PARAMETER		TEST CONDITIONS	T_A†	TLC2202M			UNIT
				MIN	TYP	MAX	
SR	Slew rate at unity gain	V_O = 0.5 V to 2.5 V, R_L = 10 kΩ, C_L = 100 pF	25°C	1.6	2.5		V/μs
			Full range	0.9			
V_n	Equivalent input noise voltage	f = 10 Hz	25°C		18		nV/√Hz
		f = 1 kHz	25°C		8		
$V_{N(PP)}$	Peak-to-peak equivalent input noise voltage	f = 0.1 to 1 Hz	25°C		0.5		μV
		f = 0.1 to 10 Hz	25°C		0.7		
I_n	Equivalent input noise current		25°C		0.6		fA/√Hz
	Gain-bandwidth product	f = 10 kHz, R_L = 10 kΩ, C_L = 100 pF	25°C		1.9		MHz
ϕ_m	Phase margin at unity gain	R_L = 10 kΩ, C_L = 100 pF	25°C		47°		

† Full range is −55°C to 125°C.

TLC2202M electrical characteristics at specified free-air temperature, V_{DD} = 5 V (unless otherwise noted)

PARAMETER		TEST CONDITIONS	T_A†	TLC2202AM			TLC2202BM			UNIT
				MIN	TYP	MAX	MIN	TYP	MAX	
V_{IO}	Input offset voltage	V_{IC} = 0, R_S = 50 Ω	25°C		80	500		80	500	μV
			Full range			750			750	
α_{VIO}	Temperature coefficient of input offset voltage		Full range		0.5			0.5		μV/°C
	Input offset voltage long-term drift (see Note 4)		25°C		0.001	0.005*		0.001	0.005*	μV/mo
I_{IO}	Input offset current		25°C		0.5	60		0.5	60	pA
			Full range			500			500	
I_{IB}	Input bias current		25°C		1	60		1	60	pA
			Full range			500			500	
V_{ICR}	Common-mode input voltage range	R_S = 50 Ω	Full range	0 to 2.7			0 to 2.7			V
V_{OH}	Maximum high-level output voltage	R_L = 10 kΩ	25°C	4.7	4.8		4.7	4.8		V
			Full range	4.7			4.7			
V_{OL}	Maximum low-level output voltage	I_O = 0	25°C		0	50		0	50	mV
			Full range			50			50	
A_{VD}	Large-signal differential voltage amplification	V_O = 1 V to 4 V, R_L = 500 kΩ	25°C	150	315		150	315		V/mV
			Full range	75			75			
		V_O = 1 V to 4 V, R_L = 10 kΩ	25°C	25	55		25	55		
			Full range	10			10			
CMRR	Common-mode rejection ratio	V_O = 0, V_{IC} = V_{ICR}min, R_S = 50 Ω	25°C	75	110		75	110		dB
			Full range	75			75			
k_{SVR}	Supply-voltage rejection ratio ($\Delta V_{DD\pm}/\Delta V_{IO}$)	V_{DD} = 4.6 V to 16 V	25°C	80	110		80	110		dB
			Full range	80			80			
I_{DD}	Supply current	V_O = 2.5 V, No load	25°C		1.7	2.6		1.7	2.6	mA
			Full range			2.6			2.6	

*On products compliant to MIL-PRF-38535, Class B, this parameter is not production tested.
† Full range is −55°C to 125°C
NOTE 4: Typical values are based on the input offset voltage shift observed through 168 hours of operating life test at T_A = 150°C extrapolated to T_A = 25°C using the Arrhenius equation and assuming an activation energy of 0.96 eV.

TLC2202M operating characteristics at specified free-air temperature, V_{DD} = 5 V

PARAMETER		TEST CONDITIONS	T_A†	TLC2202AM			TLC2202BM			UNIT
				MIN	TYP	MAX	MIN	TYP	MAX	
SR	Slew rate at unity gain	V_O = 0.5 V to 2.5 V, R_L = 10 kΩ, C_L = 100 pF	25°C	1.6	2.5		1.6	2.5		V/μs
			Full range	0.9			1.1			
V_n	Equivalent input noise voltage (see Note 5)	f = 10 Hz	25°C		18	35*		18	30*	nV/√Hz
		f = 1 kHz	25°C		8	15*		8	12*	
$V_{N(PP)}$	Peak-to-peak equivalent input noise voltage	f = 0.1 to 1 Hz	25°C		0.5			0.5		μV
		f = 0.1 to 10 Hz	25°C		0.7			0.7		
I_n	Equivalent input noise current		25°C		0.6			0.6		fA/√Hz
	Gain-bandwidth product	f = 10 kHz, R_L = 10 kΩ, C_L = 100 pF	25°C		1.9			1.9		MHz
ϕ_m	Phase margin at unity gain	R_L = 10 kΩ, C_L = 100 pF	25°C		47°			47°		

*On products compliant to MIL-PRF-38535, Class B, this parameter is not production tested.
† Full range is −55°C to 125°C
NOTE 5: This parameter is tested on a sample basis for the TLC2202A and on all devices for the TLC2202B. For other test requirements, please contact the factory. This statement has no bearing on testing or nontesting of other parameters.

TLC2201Y electrical characteristics at $V_{DD\pm}$ = ±5 V, T_A = 25°C (unless otherwise noted)

PARAMETER		TEST CONDITIONS	TLC2201Y			UNIT
			MIN	TYP	MAX	
V_{IO}	Input offset voltage	V_{IC} = 0, R_S = 50 Ω		100		μV
	Input offset voltage long-term drift (see Note 4)			0.001		μV/mo
I_{IO}	Input offset current			0.5		pA
I_{IB}	Input bias current			1		pA
V_{OH}	Maximum high-level output voltage	R_L = 10 kΩ		4.8		V
V_{OL}	Maximum low-level output voltage	I_O = 0		0		mV
A_{VD}	Large-signal differential voltage amplification	V_O = 1 V to 4 V, R_L = 500 Ω		55		V/mV
		V_O = 1 V to 4 V, R_L = 10 Ω		55		
CMRR	Common-mode rejection ratio	V_{IC} = V_{ICR}min, V_O = 0, R_S = 50 Ω		110		dB
k_{SVR}	Supply voltage rejection ratio ($\Delta V_{DD\pm}/\Delta V_{IO}$)	V_{DD} = 4.6 to 16 V		110		dB
I_{DD}	Supply current per amplifier	V_O = 2.5 V, No load		1		mA

NOTE 4: Typical values are based on the input offset voltage shift observed through 168 hours of operating life test at T_A = 150°C extrapolated to T_A = 25°C using the Arrhenius equation and assuming an activation energy of 0.96 eV.

TLC2201Y operating characteristics at $V_{DD\pm}$ = ± 5 V, T_A = 25°C

PARAMETER		TEST CONDITIONS	TLC2201Y			UNIT
			MIN	TYP	MAX	
SR	Positive slew rate at unity gain	V_O = ±0.5 to 2.5 V, R_L = 10 kΩ, C_L = 100 pF		2.5		V/μs
V_n	Equivalent input noise voltage	f = 10 Hz		18		nV/√Hz
		f = 1 kHz		8		
$V_{N(PP)}$	Peak-to-peak equivalent input noise voltage	f = 0.1 to 1 Hz		0.5		μV
		f = 0.1 to 10 Hz		0.7		
I_n	Equivalent input noise current			0.6		pA/√Hz
	Gain-bandwidth product	f = 10 kHz, R_L = 10 kΩ, C_L = 100 pF		1.8		MHz
ϕ_m	Phase margin at unity gain	R_L = 10 kΩ, C_L = 100 pF		48°		

TLC2202Y electrical characteristics, V_{DD} = 5 V, T_A = 25°C (unless otherwise noted)

PARAMETER		TEST CONDITIONS		TLC2202Y			UNIT
				MIN	TYP	MAX	
V_{IO}	Input offset voltage	V_{IC} = 0,	R_S = 50 Ω		100		μV
	Input offset voltage long-term drift (see Note 4)				0.001		μV/mo
I_{IO}	Input offset current				0.5		pA
I_{IB}	Input bias current				1		pA
V_{OH}	Maximum high-level output voltage	R_L = 10 kΩ			4.8		V
V_{OL}	Maximum low-level output voltage	I_O = 0			0		mV
A_{VD}	Large-signal differential voltage amplification	V_O = 1 V to 4 V,	R_L = 500 Ω		315		V/mV
		V_O = 1 V to 4 V,	R_L = 10 Ω		55		
CMRR	Common-mode rejection ratio	V_O = 0, V_{ICR}min,	R_S = 50 Ω		110		dB
k_{SVR}	Supply-voltage rejection ratio ($\Delta V_{DCC}/\Delta V_{IO}$)	V_{DD} = 4.6 to 16 V			110		dB
I_{DD}	Supply current	V_O = 2.5 V,	No load		1.7		mA

NOTE 4: Typical values are based on the input offset voltage shift observed through 168 hours of operating life test at T_A = 150°C extrapolated to T_A = 25°C using the Arrhenius equation and assuming an activation energy of 0.96 eV.

TLC2202Y operating characteristics at V_{DD} = 5 V, T_A = 25°C

PARAMETER		TEST CONDITIONS		TLC2202Y			UNIT
				MIN	TYP	MAX	
SR	Positive slew rate at unity gain	V_O = 0.5 V to 2.5 V, C_L = 100 pF	R_L = 10 kΩ,		2.5		V/μs
V_n	Equivalent input noise voltage	f = 10 Hz			18		nV/√Hz
		f = 10 kHz			8		
$V_{N(PP)}$	Peak-to-peak equivalent input noise voltage	f = 0.1 to 1 Hz			0.5		μV
		f = 0.1 to 10 Hz			0.7		
I_n	Equivalent input noise current				0.6		pA/√Hz
B_1	Gain-bandwidth product	f = 10 kHz, C_L = 100 pF	R_L = 10 kΩ,		1.9		MHz
ϕ_m	Phase margin at unity gain	R_L = 10 kΩ,	C_L = 100 pF		47°		

PARAMETER MEASUREMENT INFORMATION

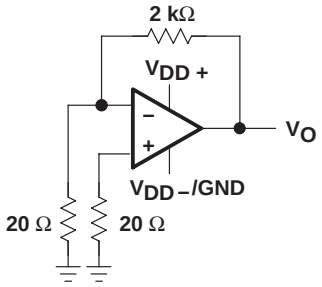

Figure 1. Noise-Voltage Test Circuit

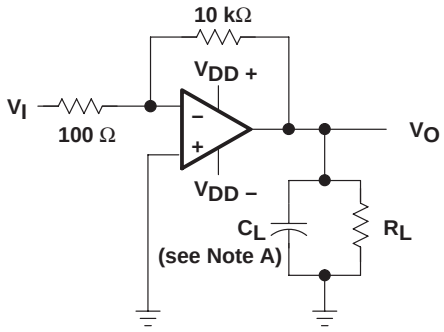

NOTE A: C_L includes fixture capacitance.

Figure 2. Phase-Margin Test Circuit

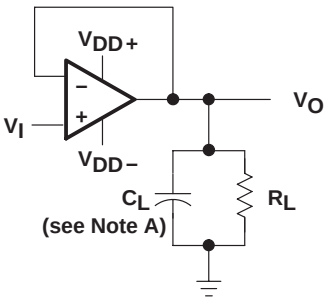

NOTE A: C_L includes fixture capacitance.

Figure 3. Slew-Rate Test Circuit

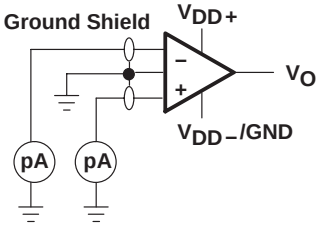

Figure 4. Input-Bias and Offset-Current Test Circuit

typical values

Typical values presented in this data sheet represent the median (50% point) of device parametric performance.

input bias and offset current

At the picoamp bias current level of the TLC220x, TLC220xA, and TLC220xB, accurate measurement of the bias current becomes difficult. Not only does this measurement require a picoammeter, but test socket leakages can easily exceed the actual device bias currents. To measure these small currents, Texas Instruments uses a two-step process. The socket leakage is measured using picoammeters with bias voltages applied but with no device in the socket. The device is then inserted in the socket, and a second test measuring both the socket leakage and the device input bias current is performed. The two measurements are then subtracted algebraically to determine the bias current of the device.

noise

Texas Instruments offers automated production noise testing to meet individual application requirements. Noise voltage at f = 10 Hz and f = 1 kHz is 100% tested on every TLC2201B device, while lot sample testing is performed on the TLC220xA. For other noise requirements, please contact the factory.

TYPICAL CHARACTERISTICS

Table of Graphs

			FIGURE
V_{IO}	Input offset voltage	Distribution	5, 6
I_{IB}	Input bias current	vs Common-mode input voltage vs Free-air temperature	7 8
V_{OM}	Maximum peak output voltage	vs Output current vs Free-air temperature	9 10
$V_{O(PP)}$	Maximum peak-to-peak output voltage	vs Frequency	11
V_{OH}	High-level output voltage	vs Frequency vs High-level output current vs Free-air temperature	12 13 14
V_{OL}	Low-level output voltage	vs Low-level output current vs Free-air temperature	15 16
A_{VD}	Large-signal differential voltage amplification	vs Frequency vs Free-air temperature	17 18
I_{OS}	Short-circuit output current	vs Supply voltage vs Free-air temperature	19 20
CMRR	Common-mode rejection ratio	vs Frequency	21
I_{DD}	Supply current	vs Supply voltage vs Free-air temperature	22 23, 24
	Pulse response	Small signal Large signal	25, 26 27, 28
SR	Slew rate	vs Supply voltage vs Free-air temperature	29 30
	Noise voltage (referred to input)	0.1 to 1 Hz 0.1 to 10 Hz	31 32
	Gain-bandwidth product	vs Supply voltage vs Free-air temperature	33, 34 35
ϕ_m	Phase margin	vs Supply voltage vs Free-air temperature	36, 37 38, 39
	Phase shift	vs Frequency	17

TYPICAL CHARACTERISTICS

DISTRIBUTION OF TLC2201
INPUT OFFSET VOLTAGE

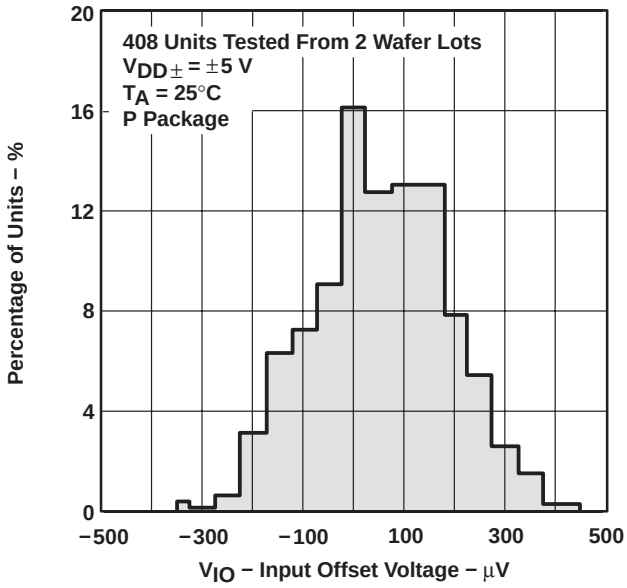

Figure 5

TLC2202
DISTRIBUTION OF
INPUT OFFSET VOLTAGE

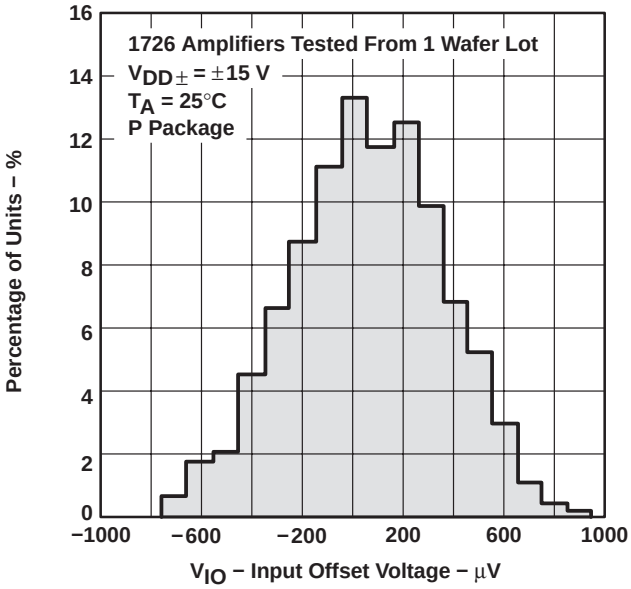

Figure 6

INPUT BIAS CURRENT
vs
COMMON-MODE INPUT VOLTAGE

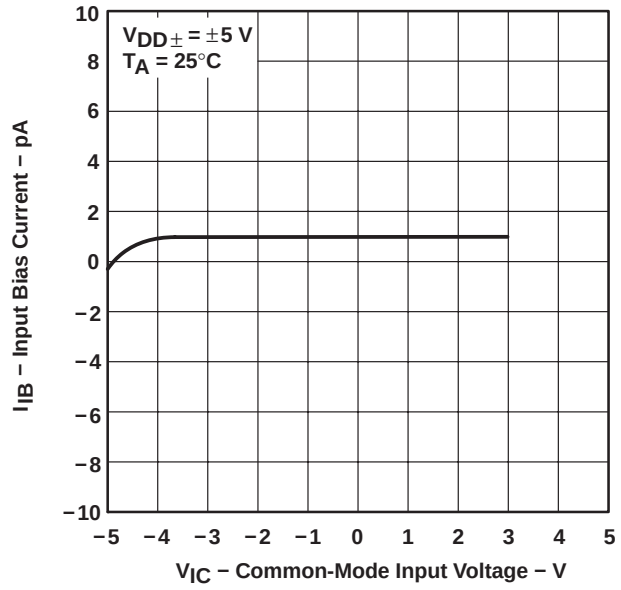

Figure 7

INPUT BIAS CURRENT†
vs
FREE-AIR TEMPERATURE

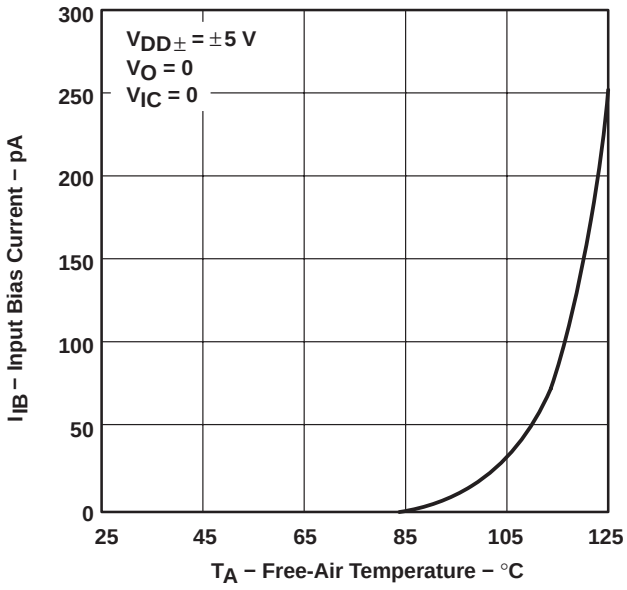

Figure 8

† Data at high and low temperatures are applicable only within the rated operating free-air temperature ranges of the various devices.

TYPICAL CHARACTERISTICS

MAXIMUM PEAK OUTPUT VOLTAGE
vs
OUTPUT CURRENT

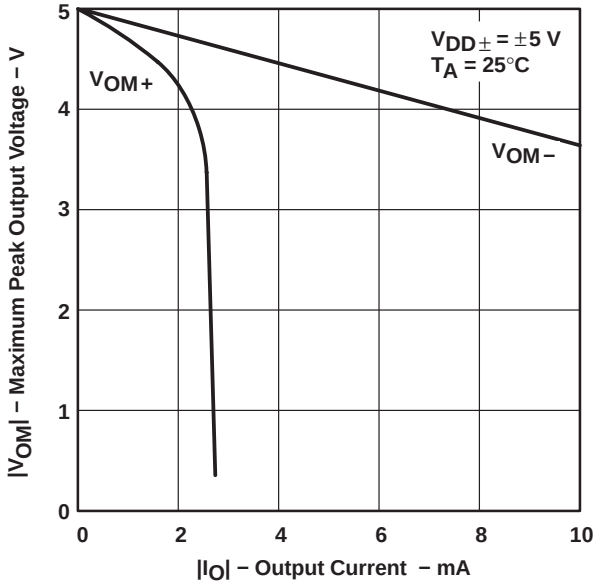

Figure 9

MAXIMUM PEAK OUTPUT VOLTAGE†
vs
FREE-AIR TEMPERATURE

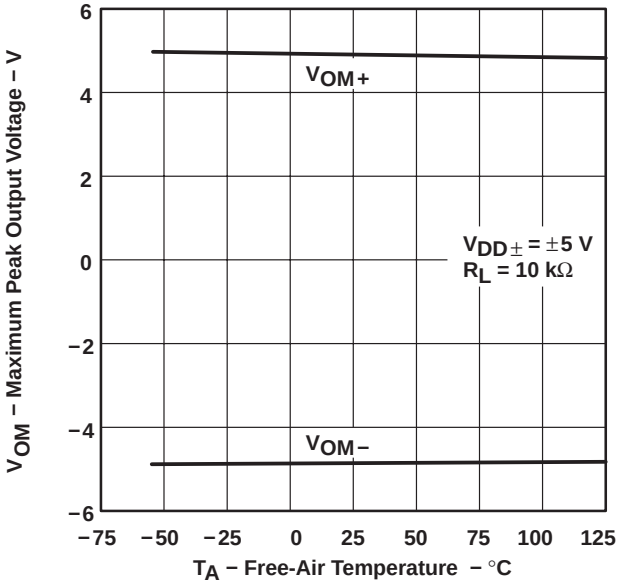

Figure 10

MAXIMUM PEAK-TO-PEAK OUTPUT VOLTAGE†
vs
FREQUENCY

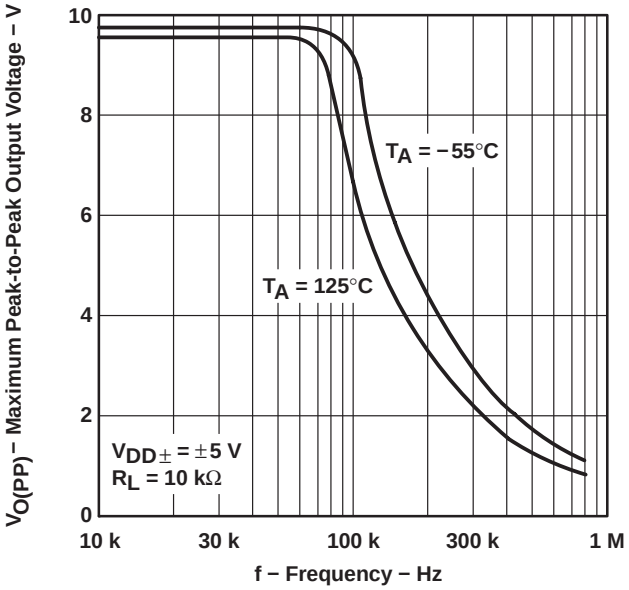

Figure 11

HIGH-LEVEL OUTPUT VOLTAGE†
vs
FREQUENCY

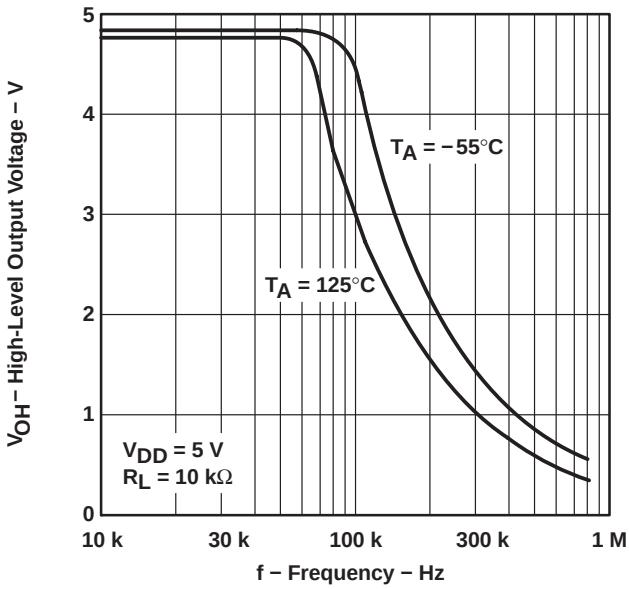

Figure 12

† Data at high and low temperatures are applicable only within the rated operating free-air temperature ranges of the various devices.

TYPICAL CHARACTERISTICS

HIGH-LEVEL OUTPUT VOLTAGE vs HIGH-LEVEL OUTPUT CURRENT

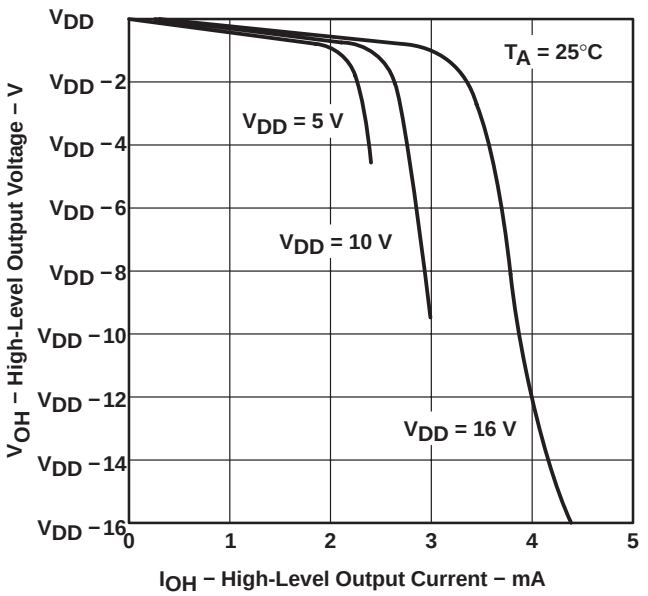

Figure 13

HIGH-LEVEL OUTPUT VOLTAGE† vs FREE-AIR TEMPERATURE

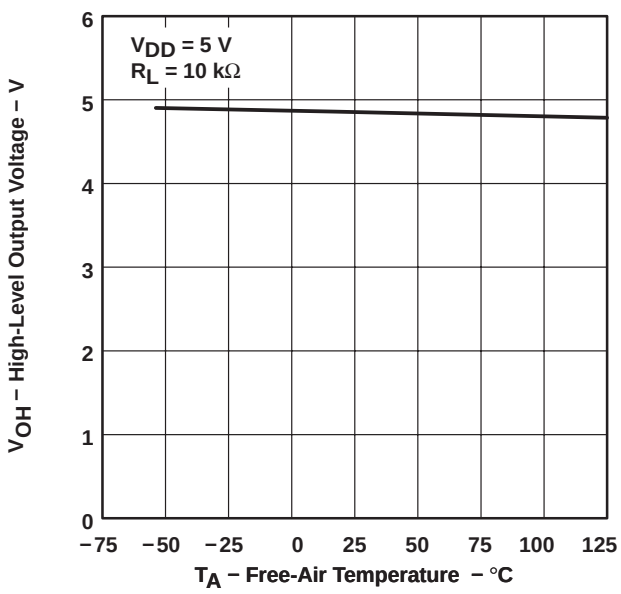

Figure 14

LOW-LEVEL OUTPUT VOLTAGE vs LOW-LEVEL OUTPUT CURRENT

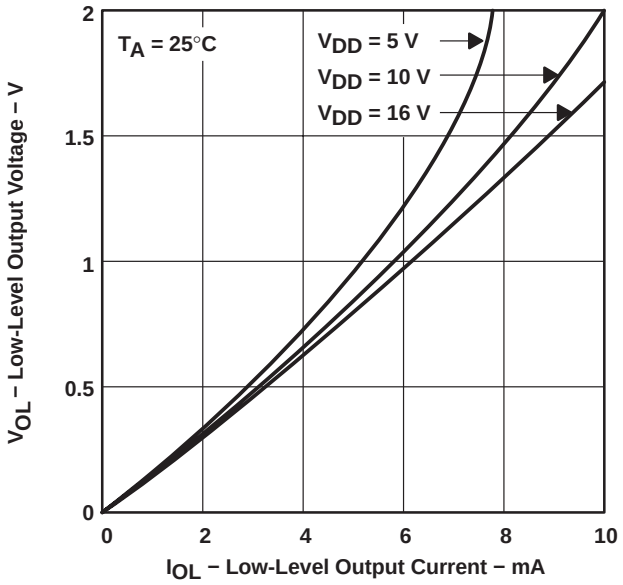

Figure 15

LOW-LEVEL OUTPUT VOLTAGE† vs FREE-AIR TEMPERATURE

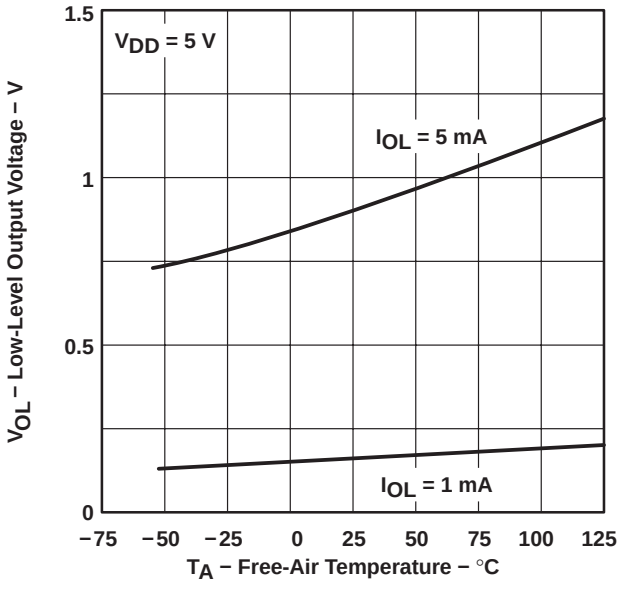

Figure 16

† Data at high and low temperatures are applicable only within the rated operating free-air temperature ranges of the various devices.

TYPICAL CHARACTERISTICS

LARGE-SIGNAL DIFFERENTIAL VOLTAGE AMPLIFICATION AND PHASE SHIFT vs FREQUENCY

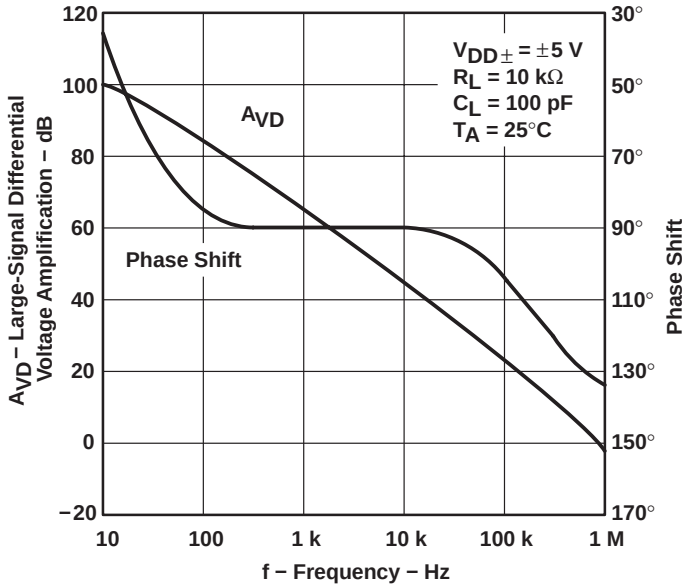

Figure 17

LARGE-SIGNAL DIFFERENTIAL VOLTAGE AMPLIFICATION† vs FREE-AIR TEMPERATURE

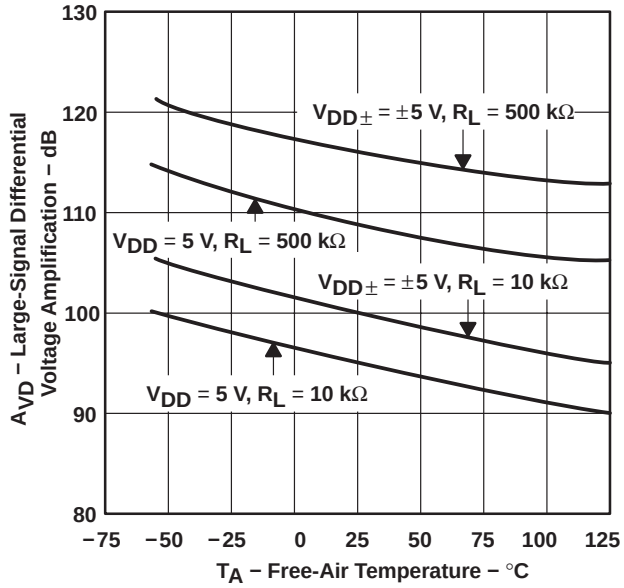

Figure 18

SHORT-CIRCUIT OUTPUT CURRENT vs SUPPLY VOLTAGE

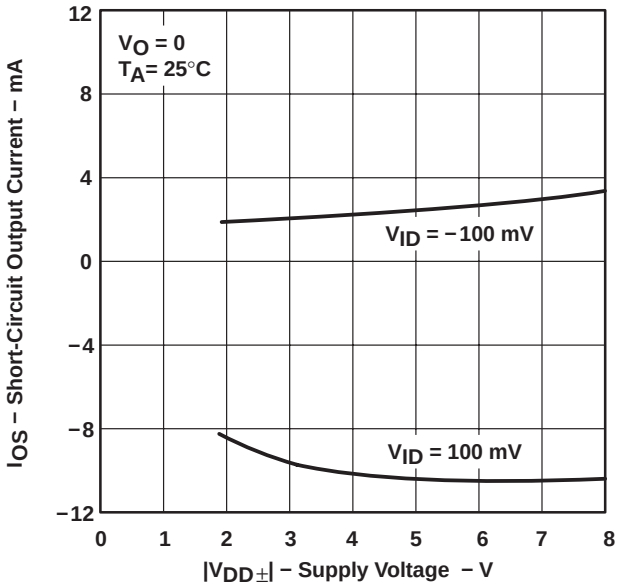

Figure 19

SHORT-CIRCUIT OUTPUT CURRENT† vs FREE-AIR TEMPERATURE

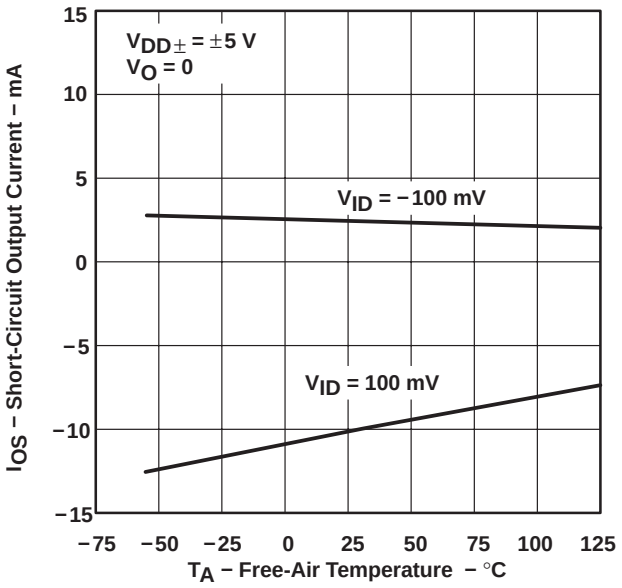

Figure 20

† Data at high and low temperatures are applicable only within the rated operating free-air temperature ranges of the various devices.

TYPICAL CHARACTERISTICS

COMMON-MODE REJECTION RATIO vs FREQUENCY

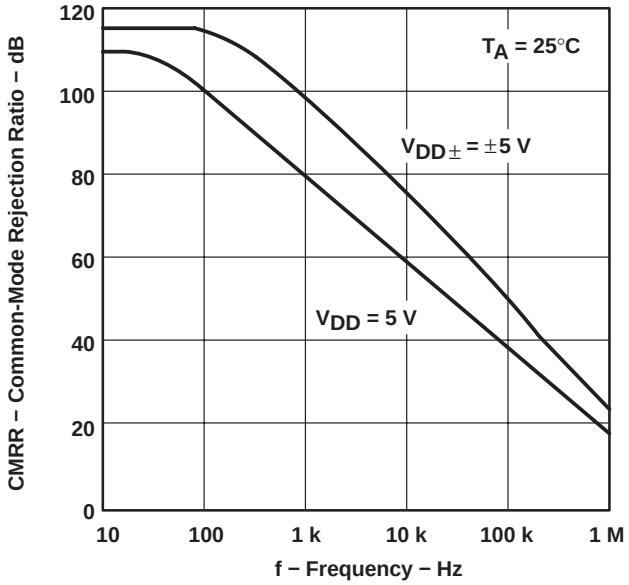

Figure 21

SUPPLY CURRENT† vs SUPPLY VOLTAGE

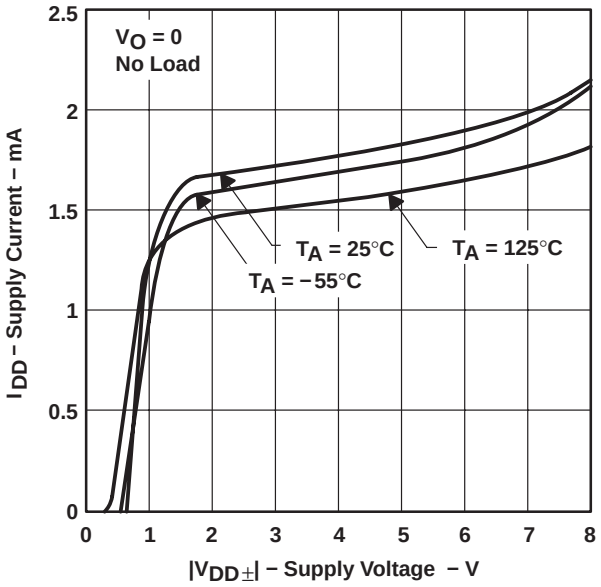

Figure 22

TLC2201 SUPPLY CURRENT† vs FREE-AIR TEMPERATURE

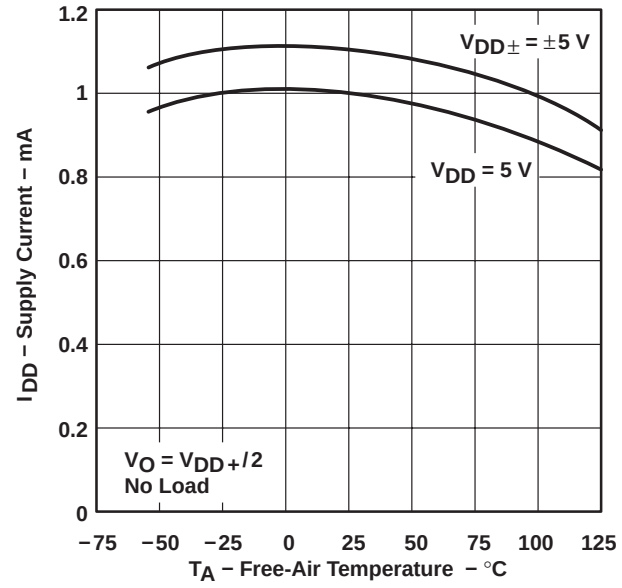

Figure 23

TLC2202 SUPPLY CURRENT† vs FREE-AIR TEMPERATURE

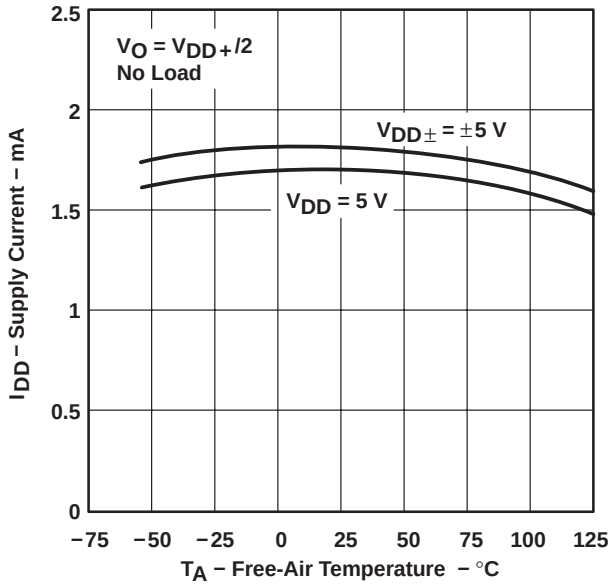

Figure 24

† Data at high and low temperatures are applicable only within the rated operating free-air temperature ranges of the various devices.

TYPICAL CHARACTERISTICS

VOLTAGE-FOLLOWER
SMALL-SIGNAL
PULSE RESPONSE

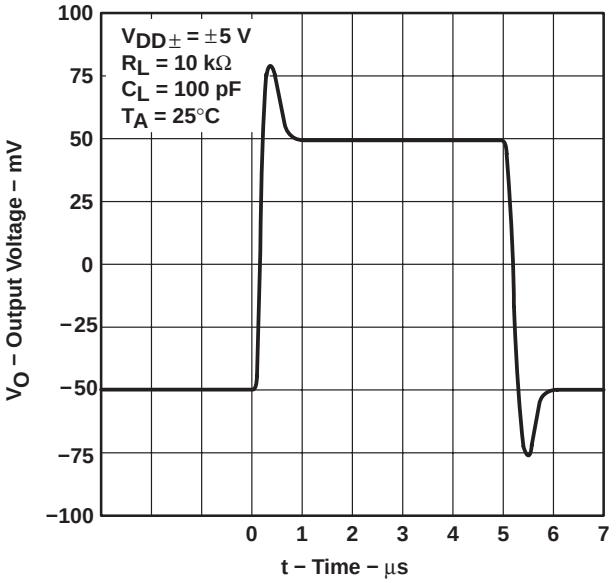

Figure 25

VOLTAGE-FOLLOWER
SMALL-SIGNAL
PULSE RESPONSE

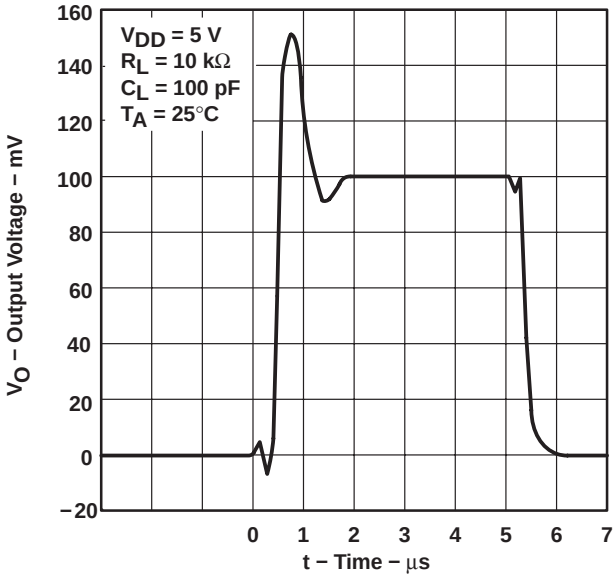

Figure 26

VOLTAGE-FOLLOWER
LARGE-SIGNAL
PULSE RESPONSE

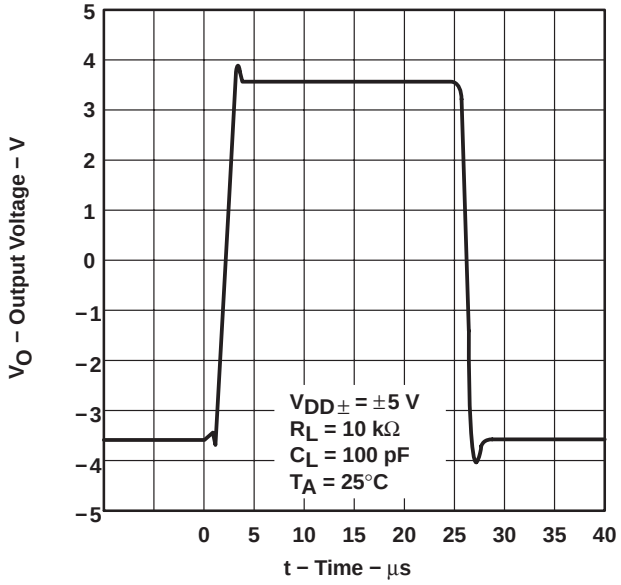

Figure 27

VOLTAGE-FOLLOWER
LARGE-SIGNAL
PULSE RESPONSE

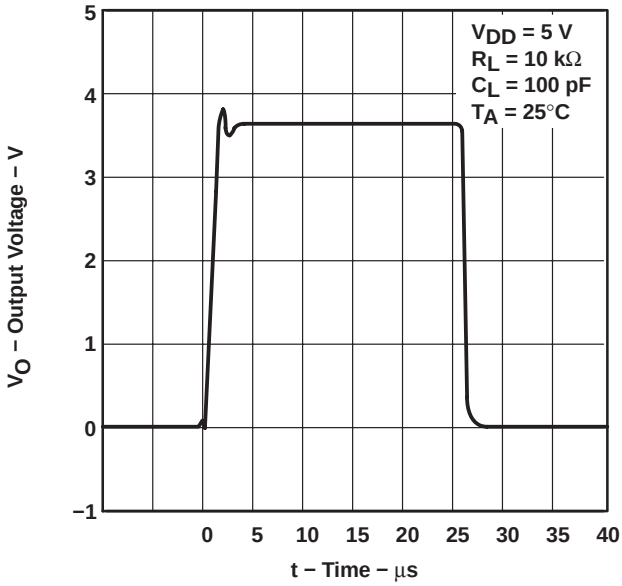

Figure 28

TYPICAL CHARACTERISTICS

**SLEW RATE
vs
SUPPLY VOLTAGE**

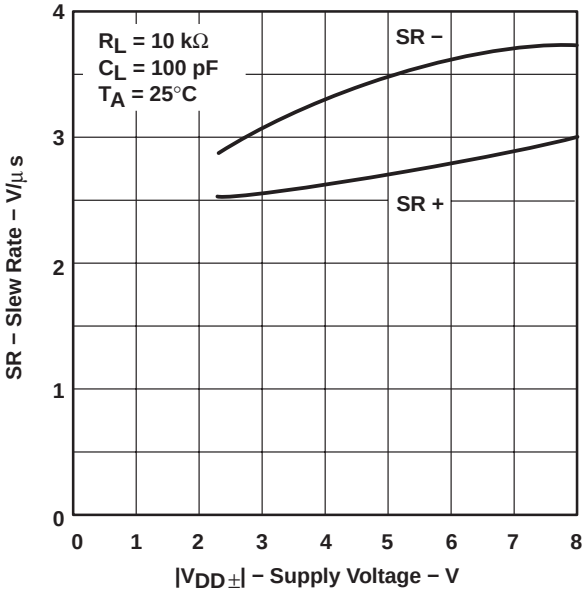

Figure 29

**SLEW RATE†
vs
FREE-AIR TEMPERATURE**

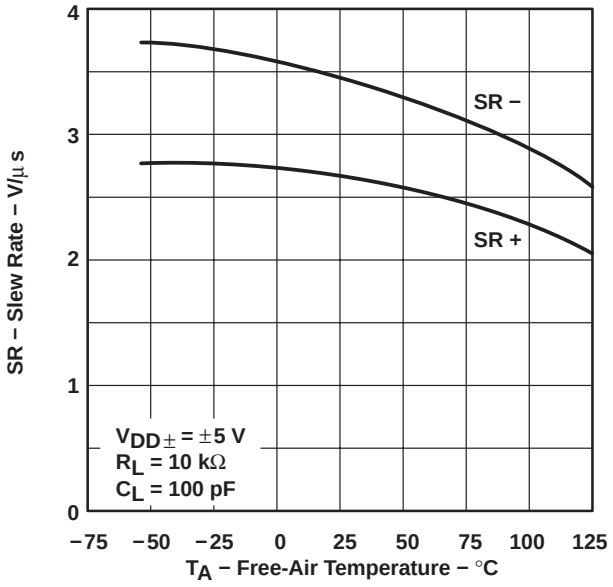

Figure 30

**NOISE VOLTAGE
(REFERRED TO INPUT)
OVER A 10-SECOND INTERVAL**

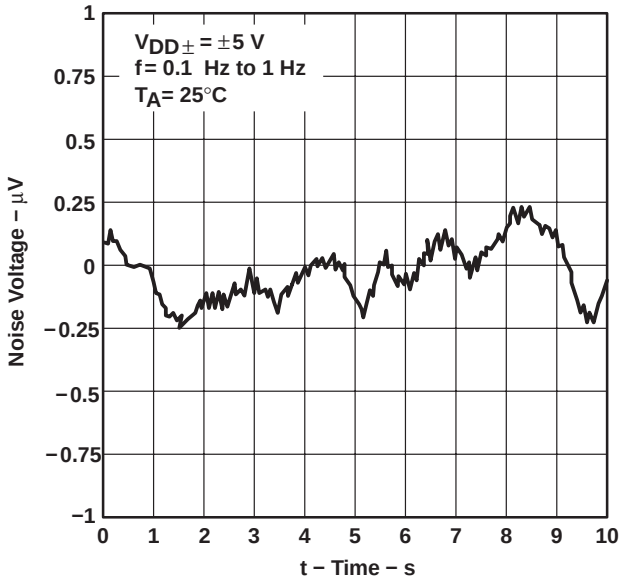

Figure 31

**NOISE VOLTAGE
(REFERRED TO INPUT)
OVER A 10-SECOND INTERVAL**

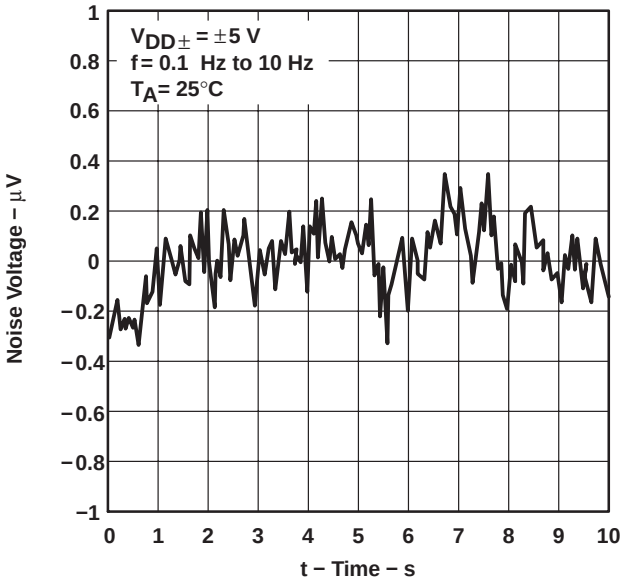

Figure 32

† Data at high and low temperatures are applicable only within the rated operating free-air temperature ranges of the various devices.

TYPICAL CHARACTERISTICS

TLC2201
GAIN-BANDWIDTH PRODUCT
vs
SUPPLY VOLTAGE

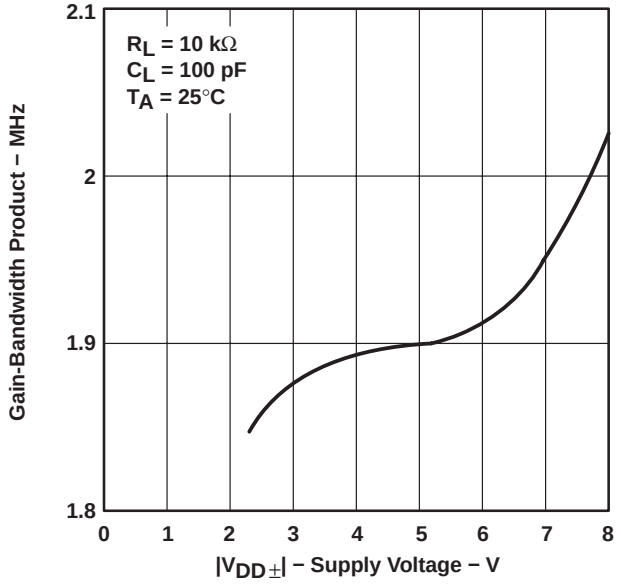

Figure 33

TLC2202
GAIN-BANDWIDTH PRODUCT
vs
SUPPLY VOLTAGE

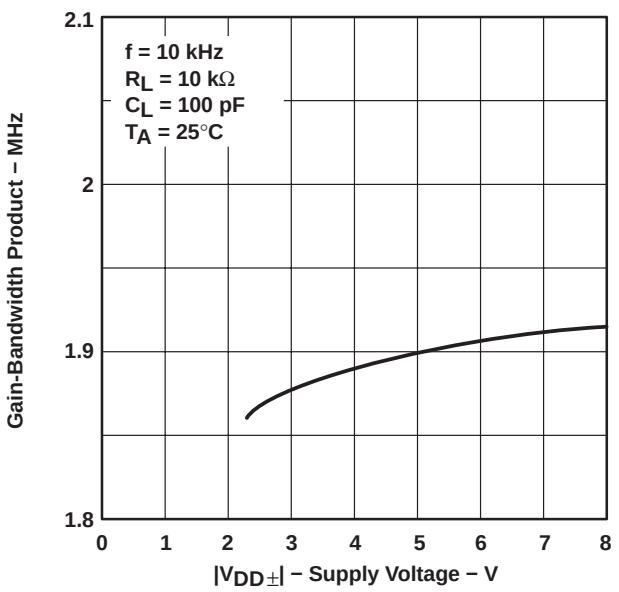

Figure 34

GAIN-BANDWIDTH PRODUCT†
vs
FREE-AIR TEMPERATURE

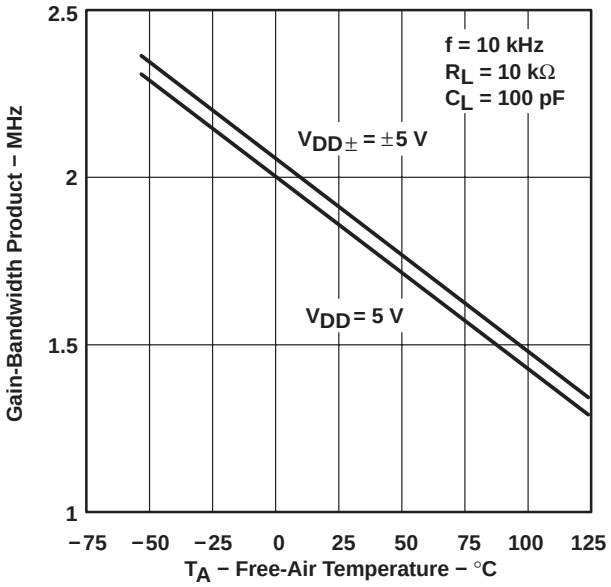

Figure 35

TLC2201
PHASE MARGIN
vs
SUPPLY VOLTAGE

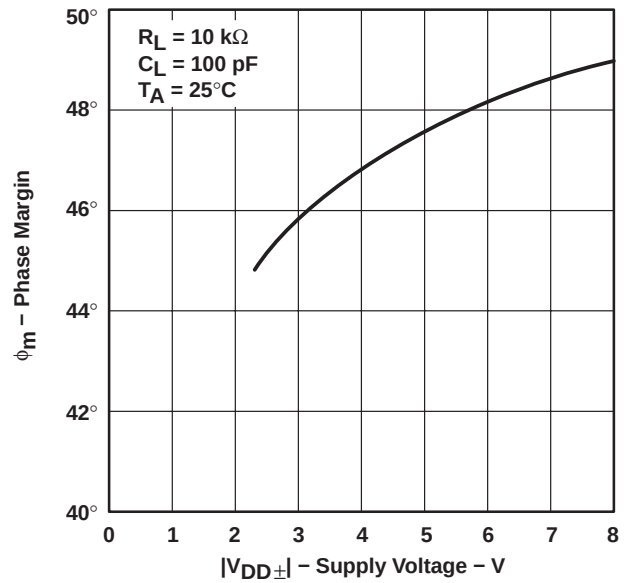

Figure 36

† Data at high and low temperatures are applicable only within the rated operating free-air temperature ranges of the various devices.

TYPICAL CHARACTERISTICS

TLC2202
PHASE MARGIN
vs
SUPPLY VOLTAGE

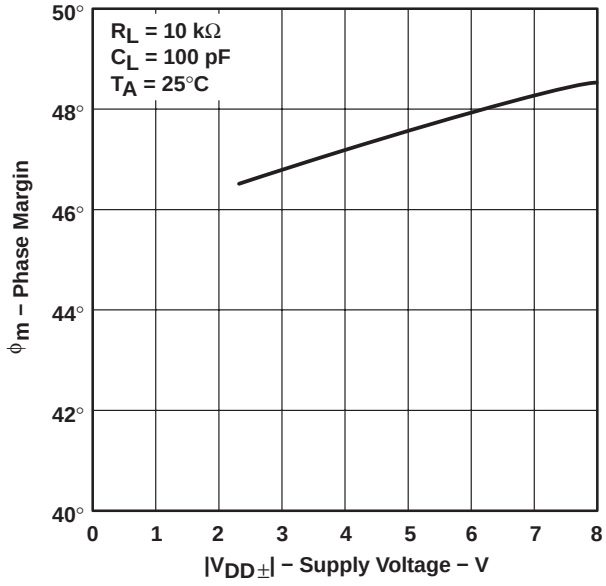

Figure 37

TLC2201
PHASE MARGIN†
vs
FREE-AIR TEMPERATURE

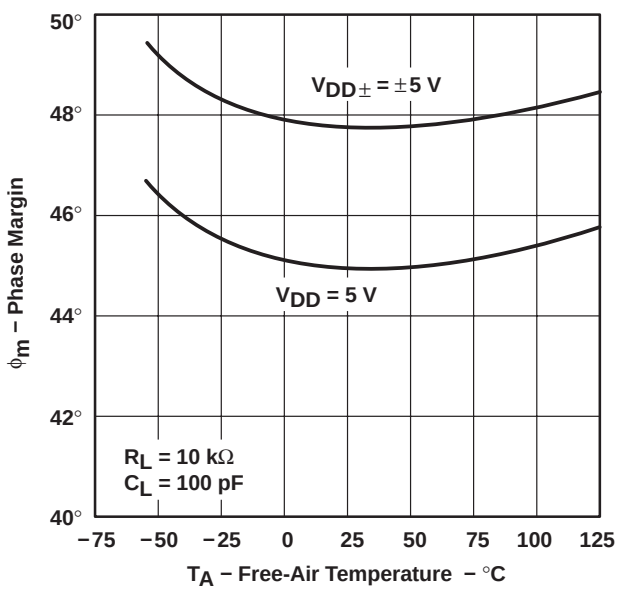

Figure 38

TLC2202
PHASE MARGIN†
vs
FREE-AIR TEMPERATURE

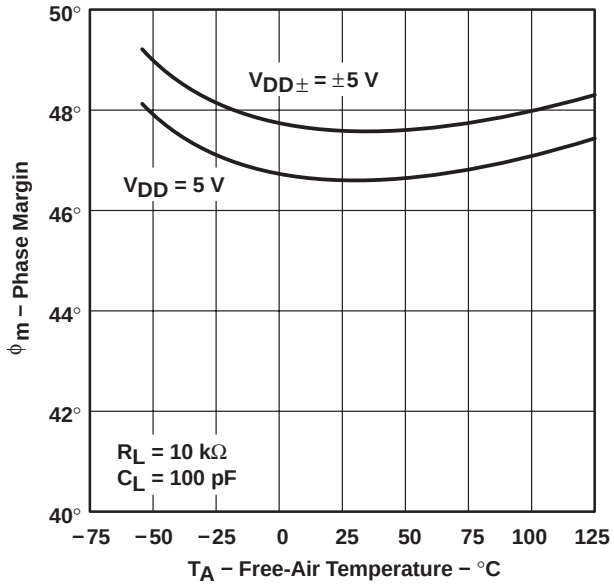

Figure 39

† Data at high and low temperatures are applicable only within the rated operating free-air temperature ranges of the various devices.

APPLICATION INFORMATION

latch-up avoidance

Because CMOS devices are susceptible to latch-up due to their inherent parasitic thyristors, the TLC220x, TLC220xA, and TLC220xB inputs and outputs are designed to withstand −100-mA surge currents without sustaining latch-up; however, techniques reducing the chance of latch-up should be used whenever possible. Internal protection diodes should not be forward biased in normal operation. Applied input and output voltages should not exceed the supply voltage by more than 300 mV. Care should be exercised when using capacitive coupling on pulse generators. Supply transients should be shunted by the use of decoupling capacitors (0.1 μF typical) located across the supply rails as close to the device as possible.

electrostatic discharge protection

These devices use internal ESD-protection circuits that prevent functional failures at voltages at or below 2000 V. Care should be exercised in handling these devices as exposure to ESD may result in degradation of the device parametric performance.

macromodel information

Macromodel information provided was derived using Microsim *Parts*™, the model generation software used with Microsim *PSpice*™. The Boyle macromodel (see Note 5) and subcircuit in Figure 40 were generated using the TLC220x typical electrical and operating characteristics at 25°C. Using this information, output simulations of the following key parameters can be generated to a tolerance of 20% (in most cases):

- Maximum positive output voltage swing
- Maximum negative output voltage swing
- Slew rate
- Quiescent power dissipation
- Input bias current
- Open-loop voltage amplification
- Unity-gain frequency
- Common-mode rejection ratio
- Phase margin
- DC output resistance
- AC output resistance
- Short-circuit output current limit

NOTE 5: G. R. Boyle, B. M. Cohn, D. O. Pederson, and J. E. Solomon, “Macromodeling of Integrated Circuit Operational Amplifiers”, *IEEE Journal of Solid-State Circuits*, SC-9, 353 (1974).

PSpice and *Parts* are trademarks of MicroSim Corporation.

APPLICATION INFORMATION

macromodel information (continued)

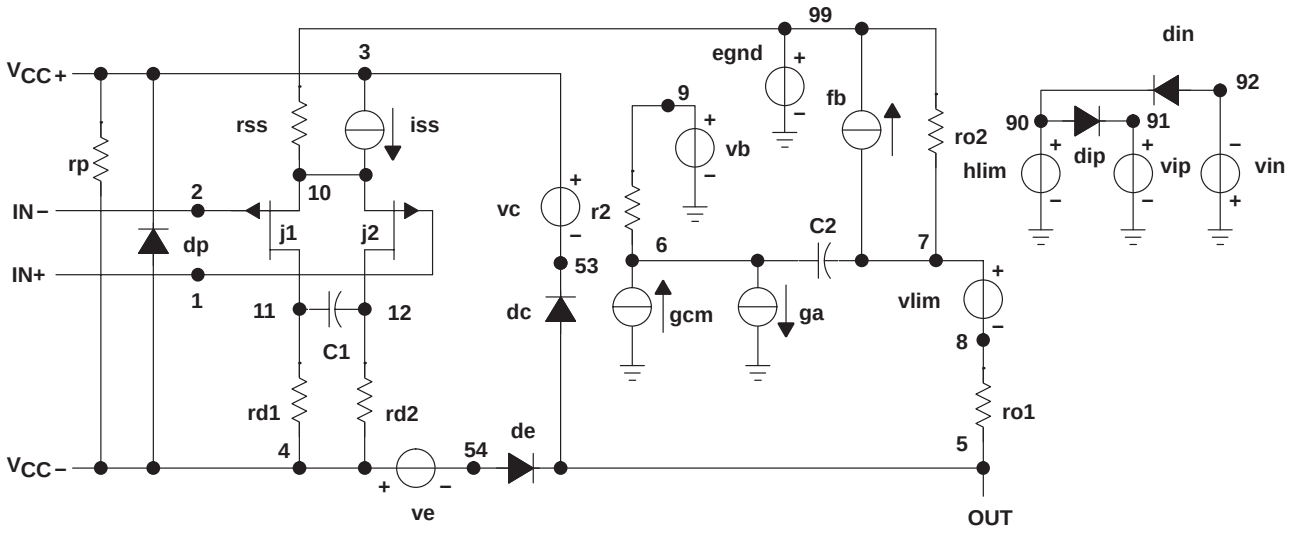


```
.subckt TLC220x  1 2 3 4 5
*
  c1   11  12 8.51E-12
  c2   6   7  50.00E-12
  cpsr 85  86 79.6E-9
  dcm+ 81  82 dx
  dcm- 83  81 dx
  dc   5   53 dx
  de   54  5  dx
  dlp  90  91 dx
  dln  92  90 dx
  dp   4   3  dx
  ecmr 84  99 (2,99) 1
  egnd 99  0  poly(2) (3,0) (4,0) 0 .5 .5
  epsr 85  0  poly(1) (3,4) -200E-6 20E-6
  ense 89  2  poly(1) (88,0) 100E-6 1
  fb   7   99 poly(6) vb vc ve vlp vln
+  vpsr 0 +    895.9E3 -90E3 90E3 90E3 -90E3 895E3
  ga   6   0  11 12 314.2E-6
  gcm  0   6  10 99 1.295E-9
  gpsr 85  86 (85,86) 100E-6
  grd1 60  11 (60,11) 3.141E-4
  grd2 60  12 (60,12) 3.141E-4
  hlim 90  0  vlim 1k
  hcmr 80  1  poly(2) vcm+ vcm- 0 1E2 1E2
  irp  3   4  965E-6
  iss  3   10 dc 135.0E-6
  iio  2   0  .5E-12
  i1   88  0  1E-21
  j1   11  89 10 jx
  j2   12  80 10 jx
  r2   6   9  100.0E3
  rcm  84  81 1k
  rn1  88  0  1500
  ro1  8   5  188
  ro2  7   99 187
  rss  10  99 1.481E6
  vad  60  4  -.3v
  vcm+ 82  99 2.2
  vcm- 83  99 -4.5
  vb   9   0  dc 0
  vc   3   53 dc .9
  ve   54  4  dc .8
  vlim 7   8  dc 0
  vlp  91  0  dc 2.8
  vln  0   92 dc 2.8
  vpsr 0   86 dc 0
.model dx  d(is=800.0E-18)
.model jx pjf(is=500.0E-15 beta=1.462E-3
+ vto=-.155 kf=1E-17)
.endsx
```

Figure 40. Boyle Macromodel and Subcircuit

PACKAGING INFORMATION

Orderable Device	Status (1)	Package Type	Package Drawing	Pins	Package Qty	Eco Plan (2)	Lead finish/ Ball material (6)	MSL Peak Temp (3)	Op Temp (°C)	Device Marking (4/5)	Samples
5962-9088201M2A	ACTIVE	LCCC	FK	20	55	Non-RoHS & Green	SNPB	N / A for Pkg Type	-55 to 125	5962-9088201M2A TLC2201MFKB	Samples
5962-9088201MPA	ACTIVE	CDIP	JG	8	50	Non-RoHS & Green	SNPB	N / A for Pkg Type	-55 to 125	9088201MPA TLC2201M	Samples
5962-9088202M2A	ACTIVE	LCCC	FK	20	55	Non-RoHS & Green	SNPB	N / A for Pkg Type	-55 to 125	5962-9088202M2A TLC2202MFKB	Samples
5962-9088202MPA	ACTIVE	CDIP	JG	8	50	Non-RoHS & Green	SNPB	N / A for Pkg Type	-55 to 125	9088202MPA TLC2202M	Samples
5962-9088203QPA	ACTIVE	CDIP	JG	8	50	Non-RoHS & Green	SNPB	N / A for Pkg Type	-55 to 125	9088203QPA TLC2201AM	Samples
5962-9088204Q2A	LIFEBUY	LCCC	FK	20	55	Non-RoHS & Green	SNPB	N / A for Pkg Type	-55 to 125	5962-9088204Q2A TLC2202 AMFKB	
5962-9088204QPA	ACTIVE	CDIP	JG	8	50	Non-RoHS & Green	SNPB	N / A for Pkg Type	-55 to 125	9088204QPA TLC2202AM	Samples
TLC2201ACD	ACTIVE	SOIC	D	8	75	RoHS & Green	NIPDAU	Level-1-260C-UNLIM	0 to 70	2201AC	Samples
TLC2201ACDR	ACTIVE	SOIC	D	8	2500	RoHS & Green	NIPDAU	Level-1-260C-UNLIM	0 to 70	2201AC	Samples
TLC2201AID	ACTIVE	SOIC	D	8	75	RoHS & Green	NIPDAU	Level-1-260C-UNLIM		2201AI	Samples
TLC2201AIDG4	ACTIVE	SOIC	D	8	75	TBD	Call TI	Call TI			Samples
TLC2201AIDR	ACTIVE	SOIC	D	8	2500	RoHS & Green	NIPDAU	Level-1-260C-UNLIM		2201AI	Samples
TLC2201AMD	ACTIVE	SOIC	D	8	75	RoHS & Green	NIPDAU	Level-1-260C-UNLIM	-55 to 125	2201AM	Samples
TLC2201AMDG4	ACTIVE	SOIC	D	8	75	RoHS & Green	NIPDAU	Level-1-260C-UNLIM		2201AM	Samples
TLC2201AMJG	ACTIVE	CDIP	JG	8	50	Non-RoHS & Green	SNPB	N / A for Pkg Type	-55 to 125	TLC2201 AMJG	Samples
TLC2201AMJGB	ACTIVE	CDIP	JG	8	50	Non-RoHS & Non-Green	SNPB	N / A for Pkg Type	-55 to 125	9088203QPA TLC2201AM	Samples

Orderable Device	Status (1)	Package Type	Package Drawing	Pins	Package Qty	Eco Plan (2)	Lead finish/ Ball material (6)	MSL Peak Temp (3)	Op Temp (°C)	Device Marking (4/5)	Samples
TLC2201CD	ACTIVE	SOIC	D	8	75	RoHS & Green	NIPDAU	Level-1-260C-UNLIM	0 to 70	2201C	Samples
TLC2201CDG4	ACTIVE	SOIC	D	8	75	TBD	Call TI	Call TI	0 to 70		Samples
TLC2201CDR	ACTIVE	SOIC	D	8	2500	RoHS & Green	NIPDAU	Level-1-260C-UNLIM	0 to 70	2201C	Samples
TLC2201CDRG4	ACTIVE	SOIC	D	8	2500	TBD	Call TI	Call TI	0 to 70		Samples
TLC2201CP	ACTIVE	PDIP	P	8	50	RoHS & Green	NIPDAU	N / A for Pkg Type	0 to 70	TLC2201CP	Samples
TLC2201ID	ACTIVE	SOIC	D	8	75	RoHS & Green	NIPDAU	Level-1-260C-UNLIM		2201I	Samples
TLC2201IDR	ACTIVE	SOIC	D	8	2500	RoHS & Green	NIPDAU	Level-1-260C-UNLIM		2201I	Samples
TLC2201IP	ACTIVE	PDIP	P	8	50	RoHS & Green	NIPDAU	N / A for Pkg Type		TLC2201IP	Samples
TLC2201MFKB	ACTIVE	LCCC	FK	20	55	Non-RoHS & Green	SNPB	N / A for Pkg Type	-55 to 125	5962-9088201M2A TLC2201MFKB	Samples
TLC2201MJGB	ACTIVE	CDIP	JG	8	50	Non-RoHS & Green	SNPB	N / A for Pkg Type	-55 to 125	9088201MPA TLC2201M	Samples
TLC2202ACD	ACTIVE	SOIC	D	14	50	RoHS & Green	NIPDAU	Level-1-260C-UNLIM	0 to 70	2202AC	Samples
TLC2202ACDR	ACTIVE	SOIC	D	14	2500	RoHS & Green	NIPDAU	Level-1-260C-UNLIM		2202AC	Samples
TLC2202ACDRG4	ACTIVE	SOIC	D	14	2500	TBD	Call TI	Call TI			Samples
TLC2202AID	ACTIVE	SOIC	D	14	50	RoHS & Green	NIPDAU	Level-1-260C-UNLIM	-40 to 85	2202AI	Samples
TLC2202AIDG4	ACTIVE	SOIC	D	14	50	TBD	Call TI	Call TI	-40 to 85		Samples
TLC2202AMFKB	LIFEBUY	LCCC	FK	20	55	Non-RoHS & Green	SNPB	N / A for Pkg Type	-55 to 125	5962-9088204Q2A TLC2202 AMFKB	
TLC2202AMJG	ACTIVE	CDIP	JG	8	50	Non-RoHS & Green	SNPB	N / A for Pkg Type	-55 to 125	TLC2202 AMJG	Samples
TLC2202AMJGB	ACTIVE	CDIP	JG	8	50	Non-RoHS & Green	SNPB	N / A for Pkg Type	-55 to 125	9088204QPA TLC2202AM	Samples

Orderable Device	Status (1)	Package Type	Package Drawing	Pins	Package Qty	Eco Plan (2)	Lead finish/ Ball material (6)	MSL Peak Temp (3)	Op Temp (°C)	Device Marking (4/5)	Samples
TLC2202CD	ACTIVE	SOIC	D	14	50	RoHS & Green	NIPDAU	Level-1-260C-UNLIM	0 to 70	2202C	Samples
TLC2202CDR	ACTIVE	SOIC	D	14	2500	RoHS & Green	NIPDAU	Level-1-260C-UNLIM	0 to 70	2202C	Samples
TLC2202CP	ACTIVE	PDIP	P	8	50	RoHS & Green	NIPDAU	N / A for Pkg Type		TLC2202CP	Samples
TLC2202CPS	ACTIVE	SO	PS	8	80	RoHS & Green	NIPDAU	Level-1-260C-UNLIM		P2202	Samples
TLC2202CPSR	ACTIVE	SO	PS	8	2000	RoHS & Green	NIPDAU	Level-1-260C-UNLIM		P2202	Samples
TLC2202ID	ACTIVE	SOIC	D	14	50	RoHS & Green	NIPDAU	Level-1-260C-UNLIM		TLC2202I	Samples
TLC2202IP	ACTIVE	PDIP	P	8	50	RoHS & Green	NIPDAU	N / A for Pkg Type		TLC2202IP	Samples
TLC2202MFKB	ACTIVE	LCCC	FK	20	55	Non-RoHS & Green	SNPB	N / A for Pkg Type	-55 to 125	5962-9088202M2A TLC2202MFKB	Samples
TLC2202MJG	ACTIVE	CDIP	JG	8	50	Non-RoHS & Green	SNPB	N / A for Pkg Type	-55 to 125	TLC2202MJG	Samples
TLC2202MJGB	ACTIVE	CDIP	JG	8	50	Non-RoHS & Green	SNPB	N / A for Pkg Type	-55 to 125	9088202MPA TLC2202M	Samples

(1) The marketing status values are defined as follows:
ACTIVE: Product device recommended for new designs.
LIFEBUY: TI has announced that the device will be discontinued, and a lifetime-buy period is in effect.
NRND: Not recommended for new designs. Device is in production to support existing customers, but TI does not recommend using this part in a new design.
PREVIEW: Device has been announced but is not in production. Samples may or may not be available.
OBSOLETE: TI has discontinued the production of the device.

(2) **RoHS:** TI defines "RoHS" to mean semiconductor products that are compliant with the current EU RoHS requirements for all 10 RoHS substances, including the requirement that RoHS substance do not exceed 0.1% by weight in homogeneous materials. Where designed to be soldered at high temperatures, "RoHS" products are suitable for use in specified lead-free processes. TI may reference these types of products as "Pb-Free".
RoHS Exempt: TI defines "RoHS Exempt" to mean products that contain lead but are compliant with EU RoHS pursuant to a specific EU RoHS exemption.
Green: TI defines "Green" to mean the content of Chlorine (Cl) and Bromine (Br) based flame retardants meet JS709B low halogen requirements of <=1000ppm threshold. Antimony trioxide based flame retardants must also meet the <=1000ppm threshold requirement.

(3) MSL, Peak Temp. - The Moisture Sensitivity Level rating according to the JEDEC industry standard classifications, and peak solder temperature.

(4) There may be additional marking, which relates to the logo, the lot trace code information, or the environmental category on the device.

(5) Multiple Device Markings will be inside parentheses. Only one Device Marking contained in parentheses and separated by a "~" will appear on a device. If a line is indented then it is a continuation of the previous line and the two combined represent the entire Device Marking for that device.

(6) Lead finish/Ball material - Orderable Devices may have multiple material finish options. Finish options are separated by a vertical ruled line. Lead finish/Ball material values may wrap to two lines if the finish value exceeds the maximum column width.

Important Information and Disclaimer: The information provided on this page represents TI's knowledge and belief as of the date that it is provided. TI bases its knowledge and belief on information provided by third parties, and makes no representation or warranty as to the accuracy of such information. Efforts are underway to better integrate information from third parties. TI has taken and continues to take reasonable steps to provide representative and accurate information but may not have conducted destructive testing or chemical analysis on incoming materials and chemicals. TI and TI suppliers consider certain information to be proprietary, and thus CAS numbers and other limited information may not be available for release.

In no event shall TI's liability arising out of such information exceed the total purchase price of the TI part(s) at issue in this document sold by TI to Customer on an annual basis.

OTHER QUALIFIED VERSIONS OF TLC2201, TLC2201A, TLC2201AM, TLC2201M, TLC2202, TLC2202A, TLC2202AM, TLC2202M :

- Catalog : TLC2201A, TLC2201, TLC2202A, TLC2202
- Military : TLC2201M, TLC2201AM, TLC2202M, TLC2202AM
- Space : TLC2201-SP, TLC2201-SP

NOTE: Qualified Version Definitions:

- Catalog - TI's standard catalog product
- Military - QML certified for Military and Defense Applications
- Space - Radiation tolerant, ceramic packaging and qualified for use in Space-based application

TAPE AND REEL INFORMATION

REEL DIMENSIONS

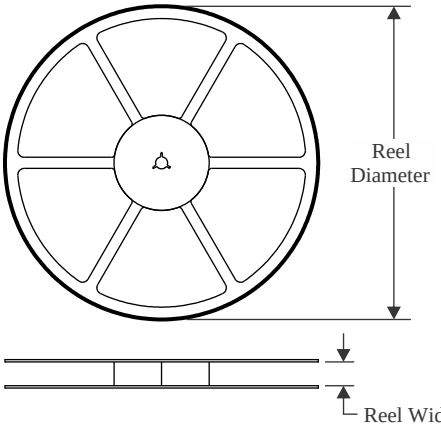

TAPE DIMENSIONS

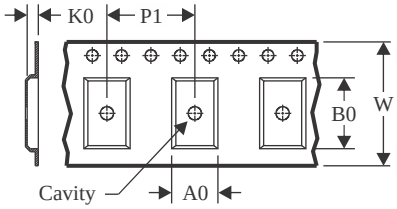

A0	Dimension designed to accommodate the component width
B0	Dimension designed to accommodate the component length
K0	Dimension designed to accommodate the component thickness
W	Overall width of the carrier tape
P1	Pitch between successive cavity centers

QUADRANT ASSIGNMENTS FOR PIN 1 ORIENTATION IN TAPE

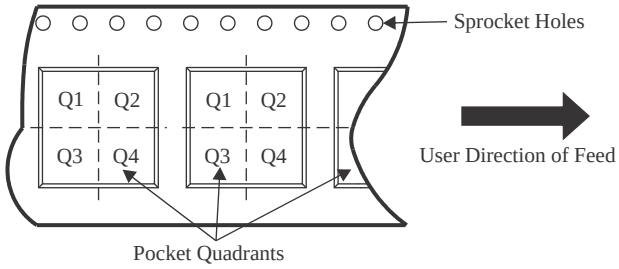

*All dimensions are nominal

Device	Package Type	Package Drawing	Pins	SPQ	Reel Diameter (mm)	Reel Width W1 (mm)	A0 (mm)	B0 (mm)	K0 (mm)	P1 (mm)	W (mm)	Pin1 Quadrant
TLC2201ACDR	SOIC	D	8	2500	330.0	12.4	6.4	5.2	2.1	8.0	12.0	Q1
TLC2201AIDR	SOIC	D	8	2500	330.0	12.4	6.4	5.2	2.1	8.0	12.0	Q1
TLC2201CDR	SOIC	D	8	2500	330.0	12.4	6.4	5.2	2.1	8.0	12.0	Q1
TLC2201IDR	SOIC	D	8	2500	330.0	12.4	6.4	5.2	2.1	8.0	12.0	Q1
TLC2202ACDR	SOIC	D	14	2500	330.0	16.4	6.5	9.0	2.1	8.0	16.0	Q1
TLC2202CDR	SOIC	D	14	2500	330.0	16.4	6.5	9.0	2.1	8.0	16.0	Q1
TLC2202CPSR	SO	PS	8	2000	330.0	16.4	8.35	6.6	2.5	12.0	16.0	Q1

TAPE AND REEL BOX DIMENSIONS

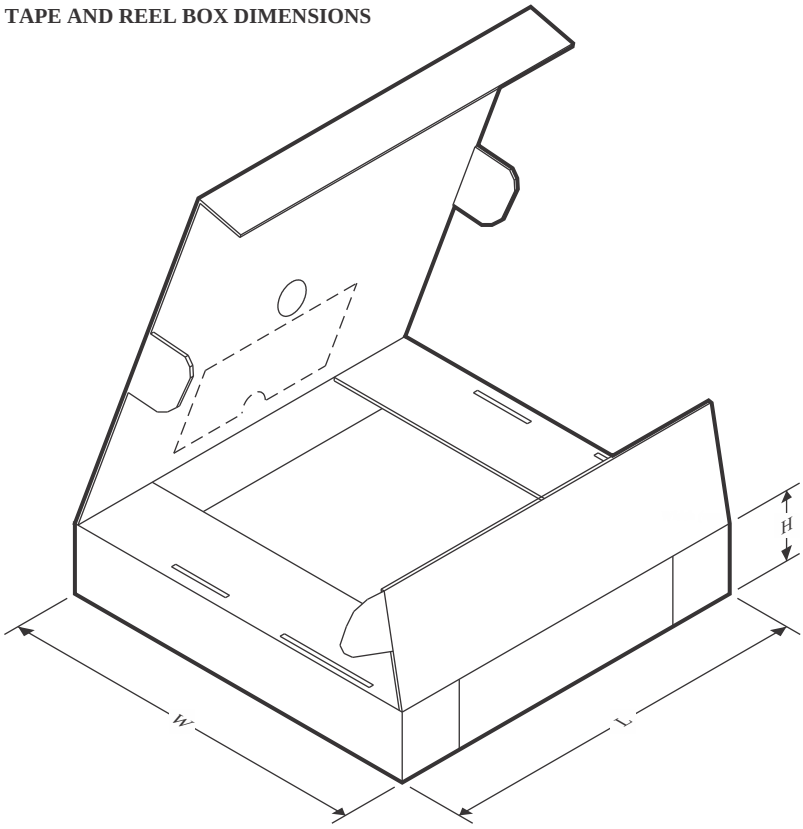

*All dimensions are nominal

Device	Package Type	Package Drawing	Pins	SPQ	Length (mm)	Width (mm)	Height (mm)
TLC2201ACDR	SOIC	D	8	2500	340.5	338.1	20.6
TLC2201AIDR	SOIC	D	8	2500	340.5	338.1	20.6
TLC2201CDR	SOIC	D	8	2500	340.5	338.1	20.6
TLC2201IDR	SOIC	D	8	2500	340.5	338.1	20.6
TLC2202ACDR	SOIC	D	14	2500	350.0	350.0	43.0
TLC2202CDR	SOIC	D	14	2500	350.0	350.0	43.0
TLC2202CPSR	SO	PS	8	2000	356.0	356.0	35.0

TUBE

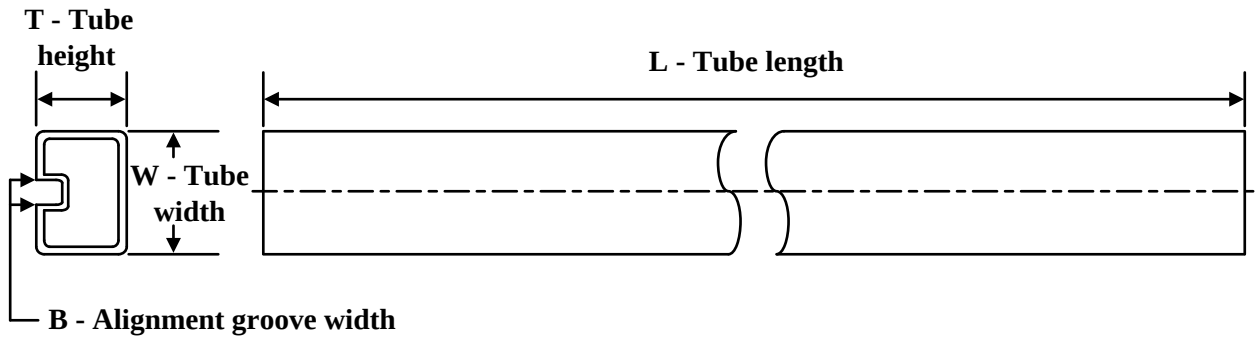

*All dimensions are nominal

Device	Package Name	Package Type	Pins	SPQ	L (mm)	W (mm)	T (µm)	B (mm)
5962-9088201M2A	FK	LCCC	20	55	506.98	12.06	2030	NA
5962-9088202M2A	FK	LCCC	20	55	506.98	12.06	2030	NA
5962-9088204Q2A	FK	LCCC	20	55	506.98	12.06	2030	NA
TLC2201ACD	D	SOIC	8	75	507	8	3940	4.32
TLC2201ACD	D	SOIC	8	75	505.46	6.76	3810	4
TLC2201AID	D	SOIC	8	75	505.46	6.76	3810	4
TLC2201AID	D	SOIC	8	75	507	8	3940	4.32
TLC2201AMD	D	SOIC	8	75	505.46	6.76	3810	4
TLC2201AMDG4	D	SOIC	8	75	505.46	6.76	3810	4
TLC2201CD	D	SOIC	8	75	507	8	3940	4.32
TLC2201CD	D	SOIC	8	75	505.46	6.76	3810	4
TLC2201CP	P	PDIP	8	50	506	13.97	11230	4.32
TLC2201ID	D	SOIC	8	75	507	8	3940	4.32
TLC2201ID	D	SOIC	8	75	505.46	6.76	3810	4
TLC2201IP	P	PDIP	8	50	506	13.97	11230	4.32
TLC2201MFKB	FK	LCCC	20	55	506.98	12.06	2030	NA
TLC2202ACD	D	SOIC	14	50	505.46	6.76	3810	4
TLC2202AID	D	SOIC	14	50	505.46	6.76	3810	4
TLC2202AMFKB	FK	LCCC	20	55	506.98	12.06	2030	NA
TLC2202CD	D	SOIC	14	50	505.46	6.76	3810	4
TLC2202CP	P	PDIP	8	50	506	13.97	11230	4.32
TLC2202CPS	PS	SOP	8	80	530	10.5	4000	4.1
TLC2202ID	D	SOIC	14	50	505.46	6.76	3810	4
TLC2202IP	P	PDIP	8	50	506	13.97	11230	4.32
TLC2202MFKB	FK	LCCC	20	55	506.98	12.06	2030	NA

GENERIC PACKAGE VIEW

FK 20

LCCC - 2.03 mm max height

8.89 x 8.89, 1.27 mm pitch

LEADLESS CERAMIC CHIP CARRIER

This image is a representation of the package family, actual package may vary.
Refer to the product data sheet for package details.

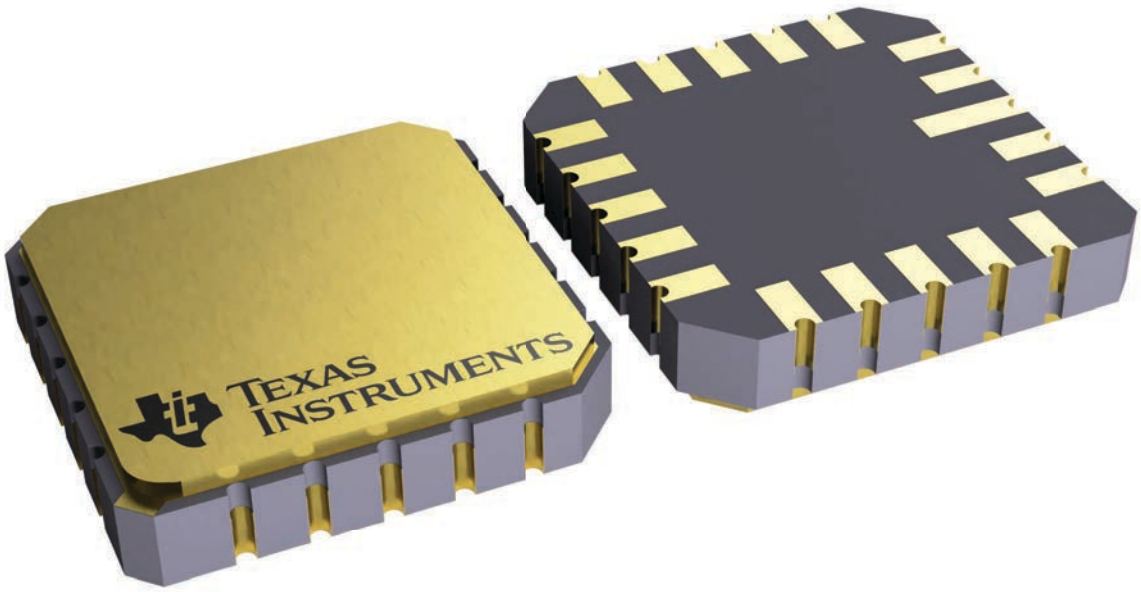

4229370VA\

D (R–PDSO–G14) PLASTIC SMALL OUTLINE

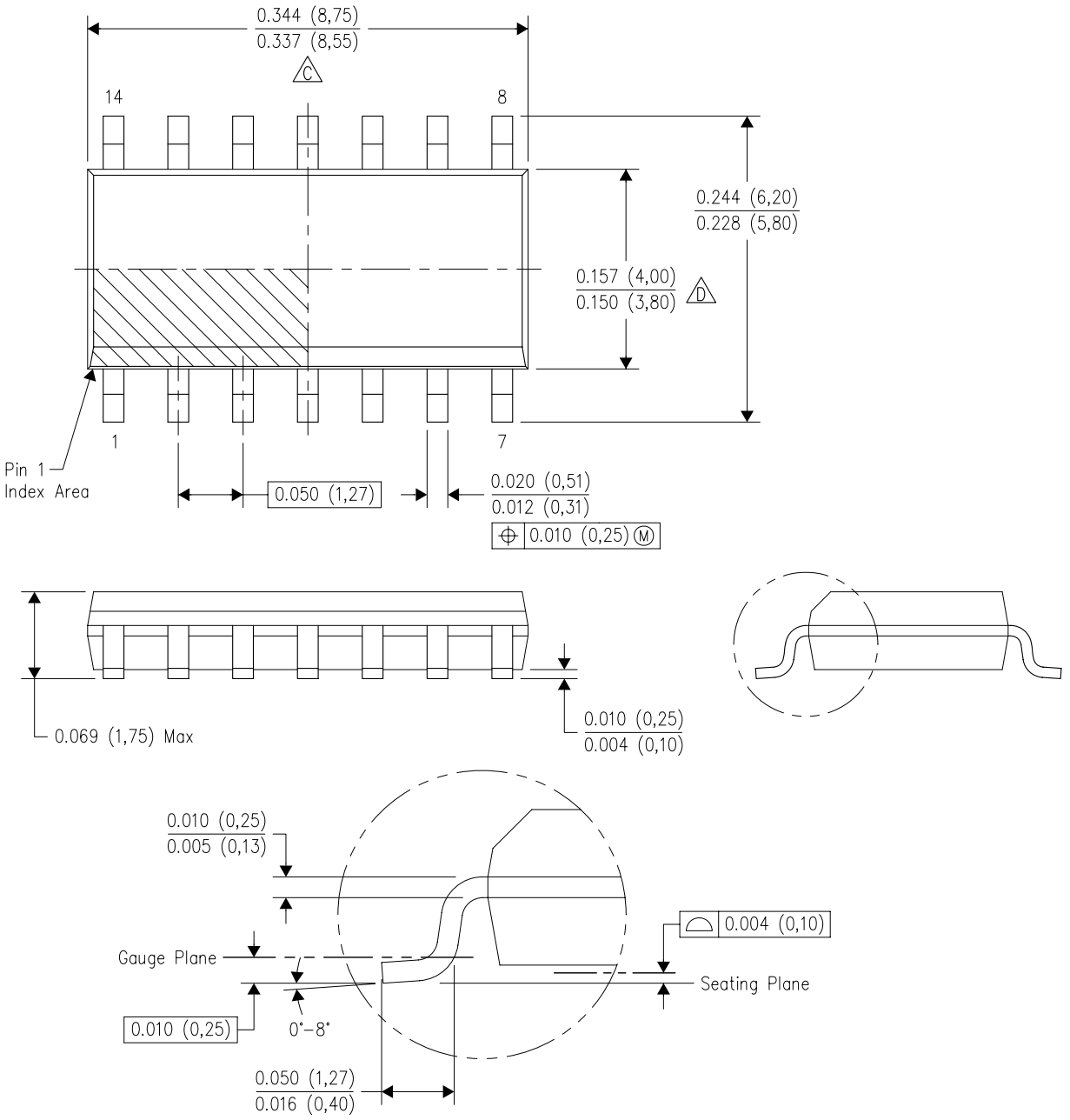

4040047–5/M 06/11

NOTES:
A. All linear dimensions are in inches (millimeters).
B. This drawing is subject to change without notice.
C. Body length does not include mold flash, protrusions, or gate burrs. Mold flash, protrusions, or gate burrs shall not exceed 0.006 (0,15) each side.
D. Body width does not include interlead flash. Interlead flash shall not exceed 0.017 (0,43) each side.
E. Reference JEDEC MS–012 variation AB.

D (R–PDSO–G14) PLASTIC SMALL OUTLINE

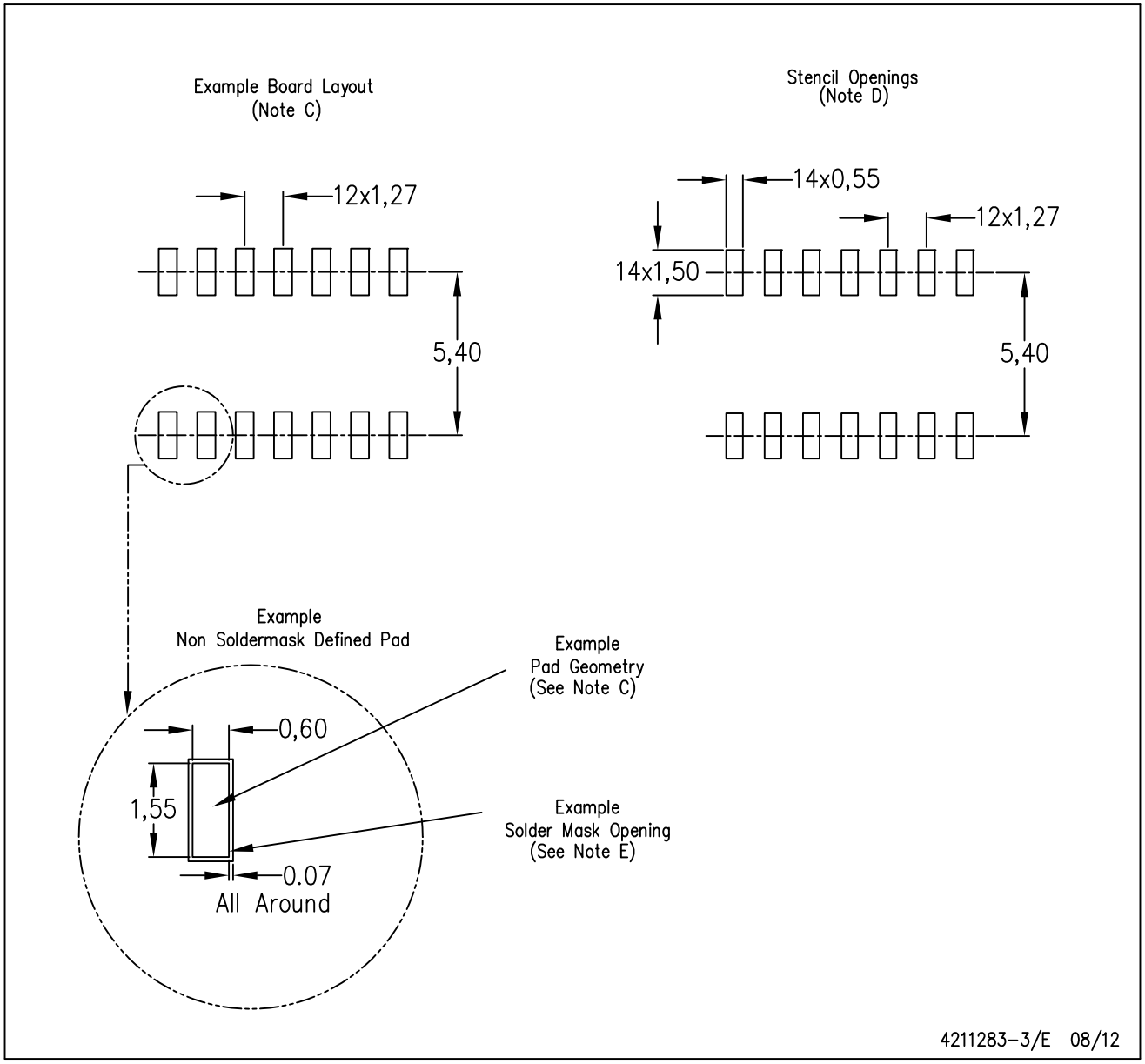

NOTES:
A. All linear dimensions are in millimeters.
B. This drawing is subject to change without notice.
C. Publication IPC–7351 is recommended for alternate designs.
D. Laser cutting apertures with trapezoidal walls and also rounding corners will offer better paste release. Customers should contact their board assembly site for stencil design recommendations. Refer to IPC–7525 for other stencil recommendations.
E. Customers should contact their board fabrication site for solder mask tolerances between and around signal pads.

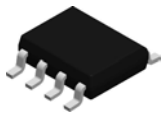

PACKAGE OUTLINE

D0008A

SOIC - 1.75 mm max height

SMALL OUTLINE INTEGRATED CIRCUIT

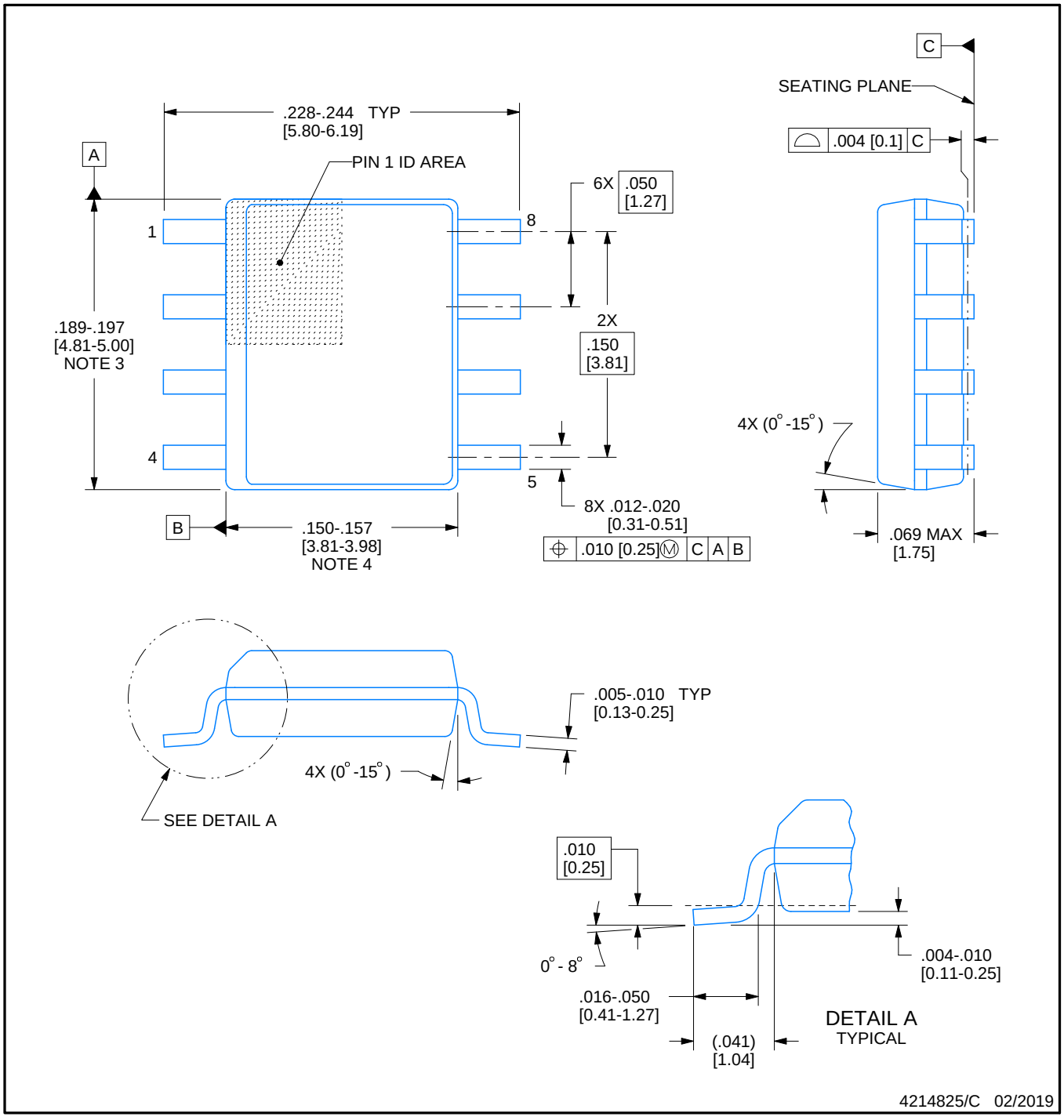

NOTES:

1. Linear dimensions are in inches [millimeters]. Dimensions in parenthesis are for reference only. Controlling dimensions are in inches. Dimensioning and tolerancing per ASME Y14.5M.
2. This drawing is subject to change without notice.
3. This dimension does not include mold flash, protrusions, or gate burrs. Mold flash, protrusions, or gate burrs shall not exceed .006 [0.15] per side.
4. This dimension does not include interlead flash.
5. Reference JEDEC registration MS-012, variation AA.

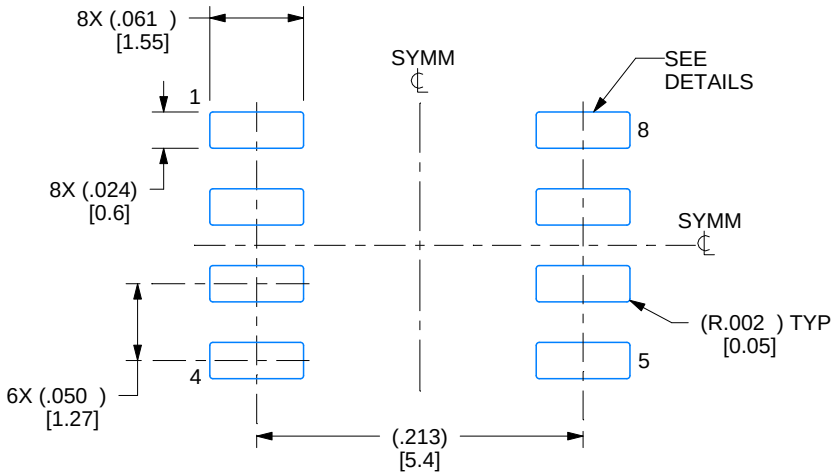

LAND PATTERN EXAMPLE
EXPOSED METAL SHOWN
SCALE:8X

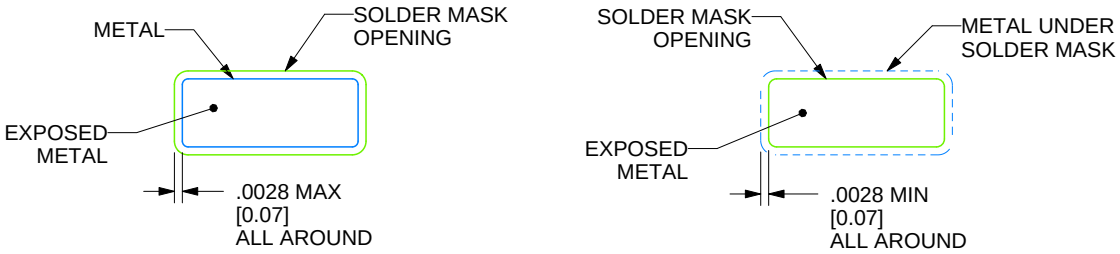

SOLDER MASK DETAILS

4214825/C 02/2019

NOTES: (continued)

6. Publication IPC-7351 may have alternate designs.
7. Solder mask tolerances between and around signal pads can vary based on board fabrication site.

EXAMPLE STENCIL DESIGN

D0008A

SOIC - 1.75 mm max height

SMALL OUTLINE INTEGRATED CIRCUIT

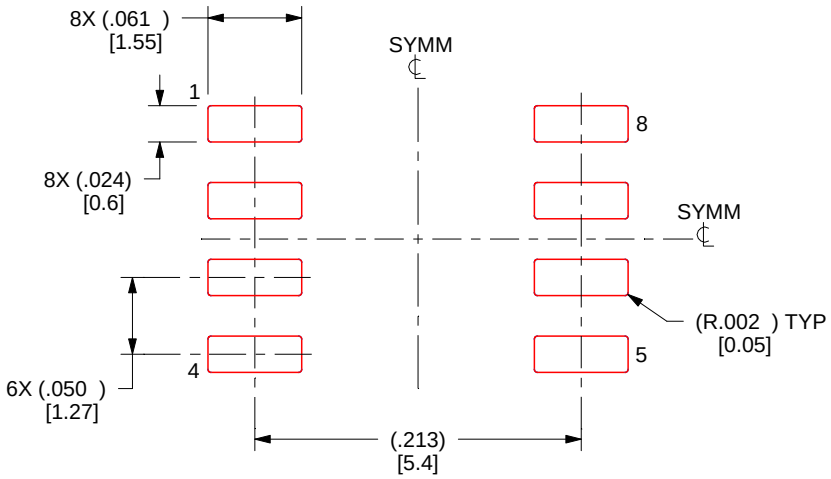

SOLDER PASTE EXAMPLE
BASED ON .005 INCH [0.125 MM] THICK STENCIL
SCALE:8X

4214825/C 02/2019

NOTES: (continued)

8. Laser cutting apertures with trapezoidal walls and rounded corners may offer better paste release. IPC-7525 may have alternate design recommendations.
9. Board assembly site may have different recommendations for stencil design.

MECHANICAL DATA

PS (R-PDSO-G8) **PLASTIC SMALL-OUTLINE PACKAGE**

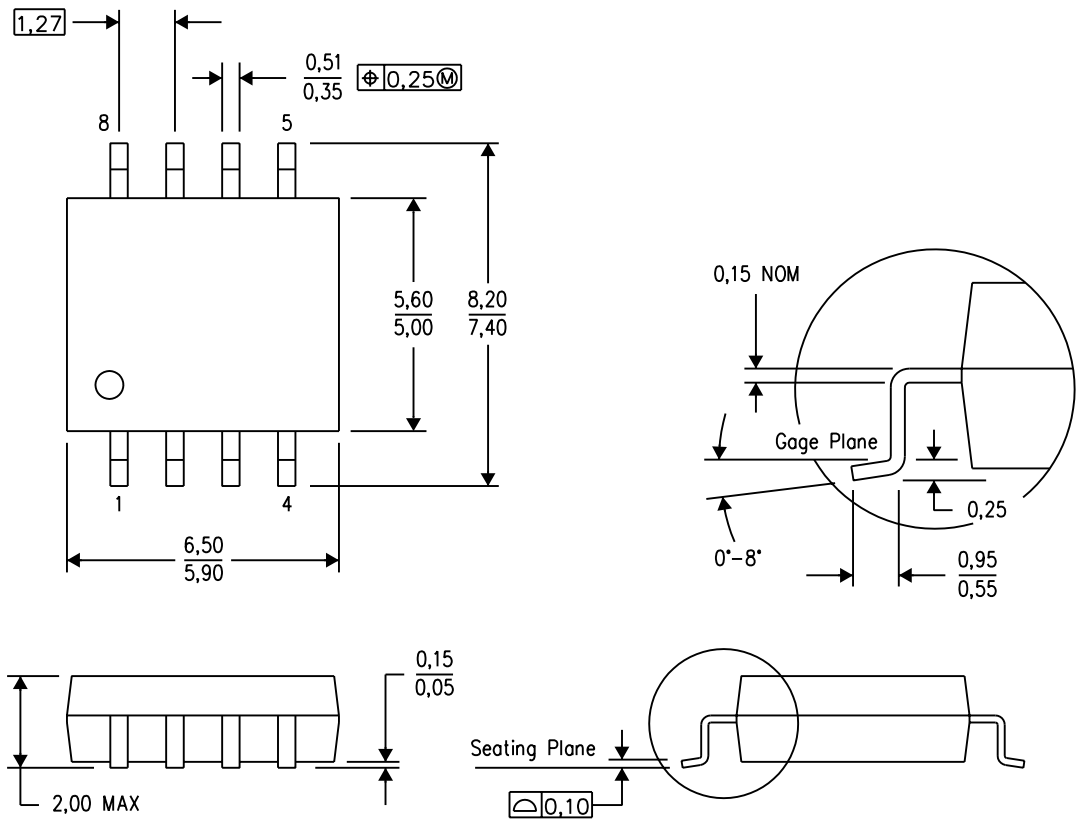

4040063/C 03/03

NOTES:
A. All linear dimensions are in millimeters.
B. This drawing is subject to change without notice.
C. Body dimensions do not include mold flash or protrusion, not to exceed 0,15.

MCER001A – JANUARY 1995 – REVISED JANUARY 1997

JG (R-GDIP-T8) **CERAMIC DUAL-IN-LINE**

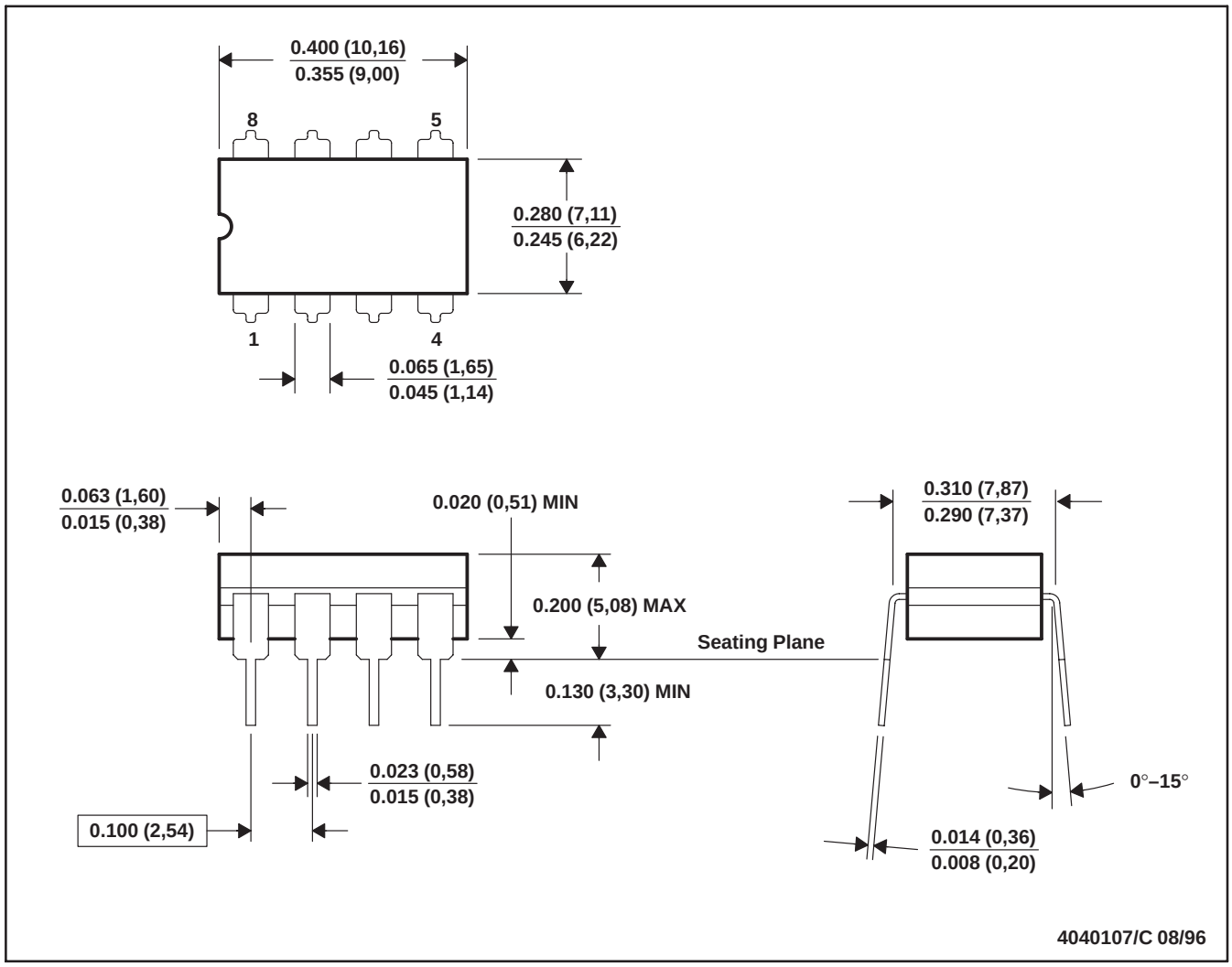

NOTES: A. All linear dimensions are in inches (millimeters).
B. This drawing is subject to change without notice.
C. This package can be hermetically sealed with a ceramic lid using glass frit.
D. Index point is provided on cap for terminal identification.
E. Falls within MIL STD 1835 GDIP1-T8

P (R–PDIP–T8) PLASTIC DUAL–IN–LINE PACKAGE

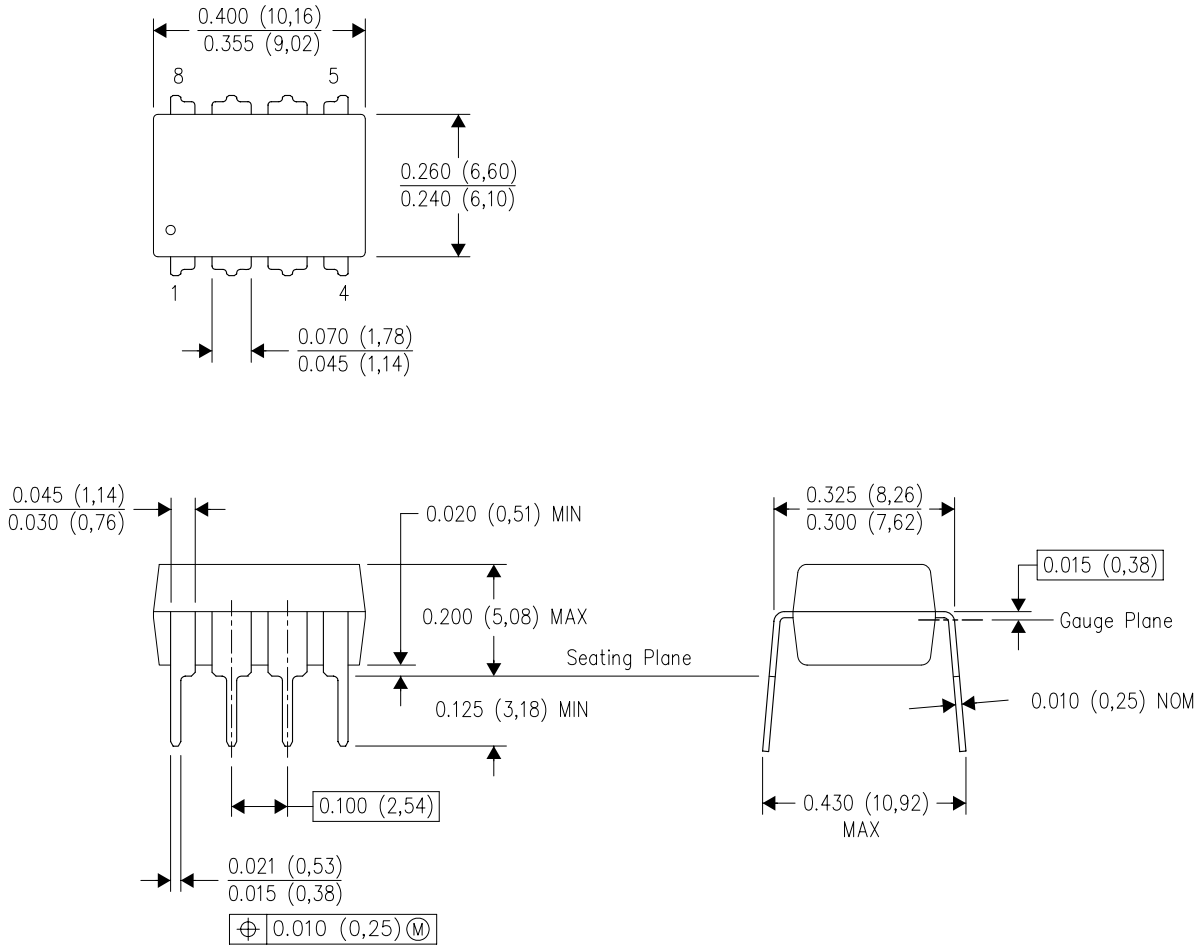

NOTES:
A. All linear dimensions are in inches (millimeters).
B. This drawing is subject to change without notice.
C. Falls within JEDEC MS–001 variation BA.

IMPORTANT NOTICE AND DISCLAIMER

TI PROVIDES TECHNICAL AND RELIABILITY DATA (INCLUDING DATA SHEETS), DESIGN RESOURCES (INCLUDING REFERENCE DESIGNS), APPLICATION OR OTHER DESIGN ADVICE, WEB TOOLS, SAFETY INFORMATION, AND OTHER RESOURCES “AS IS” AND WITH ALL FAULTS, AND DISCLAIMS ALL WARRANTIES, EXPRESS AND IMPLIED, INCLUDING WITHOUT LIMITATION ANY IMPLIED WARRANTIES OF MERCHANTABILITY, FITNESS FOR A PARTICULAR PURPOSE OR NON-INFRINGEMENT OF THIRD PARTY INTELLECTUAL PROPERTY RIGHTS.

These resources are intended for skilled developers designing with TI products. You are solely responsible for (1) selecting the appropriate TI products for your application, (2) designing, validating and testing your application, and (3) ensuring your application meets applicable standards, and any other safety, security, regulatory or other requirements.

These resources are subject to change without notice. TI grants you permission to use these resources only for development of an application that uses the TI products described in the resource. Other reproduction and display of these resources is prohibited. No license is granted to any other TI intellectual property right or to any third party intellectual property right. TI disclaims responsibility for, and you will fully indemnify TI and its representatives against, any claims, damages, costs, losses, and liabilities arising out of your use of these resources.

TI’s products are provided subject to TI’s Terms of Sale or other applicable terms available either on ti.com or provided in conjunction with such TI products. TI’s provision of these resources does not expand or otherwise alter TI’s applicable warranties or warranty disclaimers for TI products.

TI objects to and rejects any additional or different terms you may have proposed.

Mailing Address: Texas Instruments, Post Office Box 655303, Dallas, Texas 75265
Copyright © 2024, Texas Instruments Incorporated