LM4041-N-xx Precision Micropower Shunt Voltage Reference

1 Features

- Qualified for Automotive Applications
- SEC-Q100 Qualified With the Following Results:
  - Device Temperature Grade 1: –40°C to +125°C Ambient Temperature Range
  - Device Temperature Grade 3: –40°C to +85°C Ambient Temperature Range (For SOT-23 Only)
- Available in Standard, AEC Q-100 Grade 1 (Extended Temperature Range), and Grade 3 (Industrial Temperature Range) Qualified Versions (SOT-23 Only)
- Small Packages: SOT-23, TO-92, and SC70
- No Output Capacitor Required
- Tolerates Capacitive Loads
- Reverse Breakdown Voltage Options of 1.225 V and Adjustable
- Output Voltage Tolerance (A grade, 25°C) = ±0.1%(Maximum)
- Low Output Noise (10 Hz to 10kHz) = 20 μV_{rms}
- Wide Operating Current Range of 60 µA to 12 mA
- Industrial Temperature Range (LM4041A/B-N, LM4041-N-Q1A/Q1B) of −40°C to +85°C
- Extended Temperature Range (LM4041C/D/E-N, LM4041-N-Q1C/Q1D/Q1E) of −40°C to +125°C
- Low Temperature Coefficient of 100 ppm/°C (Maximum)

2 Applications

- Portable, Battery-Powered Equipment
- Data Acquisition Systems
- Instrumentation
- Process Control
- Energy Management
- Automotive
- Precision Audio Components

3 Description

Ideal for space-critical applications, the LM4041-N precision voltage reference is available in the sub-miniature SC70 and SOT-23 surface-mount packages. The advanced design of the LM4041-N eliminates the need for an external stabilizing capacitor while ensuring stability with any capacitive load, thus making the LM4041-N easy to use. Further reducing design effort is the availability of a fixed (1.225 V) and adjustable reverse breakdown voltage. The minimum operating current is 60 µA for the LM4041-N 1.2 and the LM4041-N ADJ. Both versions have a maximum operating current of 12 mA.

The LM4041-N uses fuse and Zener-zap reverse breakdown or reference voltage trim during wafer sort to ensure that the prime parts have an accuracy of better than ±0.1% (A grade) at 25°C. Bandgap reference temperature drift curvature correction and low dynamic impedance ensure stable reverse breakdown voltage accuracy over a wide range of operating temperatures and currents.

Device Information(1)

PART NUMBER	PACKAGE	BODY SIZE (NOM)
LM4041-N	SC70 (5)	1.25 mm × 2.00 mm
	SOT-23 (3)	1.30 mm × 2.92 mm
	TO-92 (3)	4.30 mm × 4.30 mm
LM4041-N-Q1	SOT-23 (3)	1.30 mm × 2.92 mm

(1) For all available packages, see the orderable addendum at the end of the data sheet.

Block Diagram

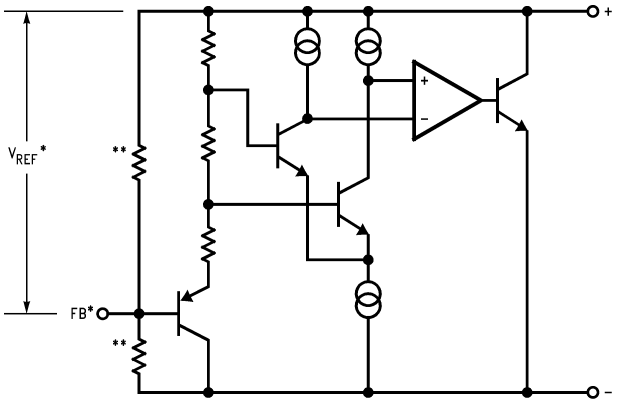

An IMPORTANT NOTICE at the end of this data sheet addresses availability, warranty, changes, use in safety-critical applications, intellectual property matters and other important disclaimers. PRODUCTION DATA.

Table of Contents

1 Features ... 1
2 Applications ... 1
3 Description ... 1
4 Revision History ... 2
5 Pin Configuration and Functions ... 3
6 Specifications ... 4
6.1 Absolute Maximum Ratings ... 4
6.2 ESD Ratings ... 5
6.3 Recommended Operating Conditions ... 5
6.4 Thermal Information ... 5
6.5 LM4041-N-xx 1.2 Electrical Characteristics (Industrial Temperature Range) ... 6
6.6 LM4041-N-xx 1.2 Electrical Characteristics (Industrial Temperature Range) ... 7
6.7 LM4041-N-xx 1.2 Electrical Characteristics (Extended Temperature Range) ... 9
6.8 LM4041-N-xx ADJ (Adjustable) Electrical Characteristics (Industrial Temperature Range) ... 11
6.9 LM4041-N-xx ADJ (Adjustable) Electrical Characteristics (Extended Temperature Range) ... 13
6.10 Typical Characteristics ... 14
7 Parameter Measurement Information ... 17
8 Detailed Description ... 17
8.1 Overview ... 17
8.2 Functional Block Diagram ... 17
8.3 Feature Description ... 17
8.4 Device Functional Modes ... 18
9 Application and Implementation ... 19
9.1 Application Information ... 19
9.2 Typical Applications ... 20
10 Power Supply Recommendations ... 27
11 Layout ... 27
11.1 Layout Guidelines ... 27
11.2 Layout Example ... 27
12 Device and Documentation Support ... 28
12.1 Related Links ... 28
12.2 Community Resources ... 28
12.3 Trademarks ... 28
12.4 Electrostatic Discharge Caution ... 28
12.5 Glossary ... 28
13 Mechanical, Packaging, and Orderable Information ... 28

4 Revision History

NOTE: Page numbers for previous revisions may differ from page numbers in the current version.

Changes from Revision F (July 2013) to Revision G — **Page**

- Added *ESD Ratings* table, *Feature Description* section, *Device Functional Modes*, *Application and Implementation* section, *Power Supply Recommendations* section, *Layout* section, *Device and Documentation Support* section, and *Mechanical, Packaging, and Orderable Information* section ... 1

Changes from Revision D (April 2013) to Revision E — **Page**

- Changed layout of National Data Sheet to TI format ... 24

Copyright © 1999–2016, Texas Instruments Incorporated

5 Pin Configuration and Functions

DBZ Package
3-Pin SOT-23
Top View

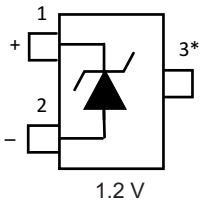

DCK Package
5-Pin SC70
Top View

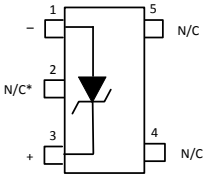

LP Package
3-Pin TO-92
Top View

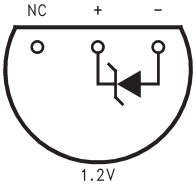

Pin Functions

PIN				I/O	DESCRIPTION
NAME	SOT-23	SC70	TO-92		
Anode	2	1	1	O	Anode pin, normally grounded
Cathode	1	3	2	I/O	Shunt current and output voltage
FB	—	—	—	I	Feedback pin for adjustable output voltage
NC**	3	2	—	—	**Must float or connect to anode
NC	—	4, 5	3	—	No connect

Copyright © 1999–2016, Texas Instruments Incorporated

DBZ Package
3-Pin SOT-23
Top View

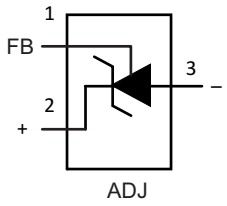

DCK Package
5-Pin SC70
Top View

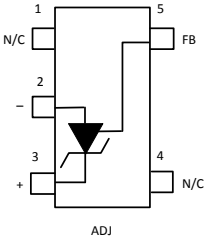

LP Pakage
3-Pin TO-92
Bottom View

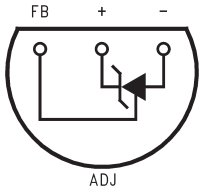

Pin Functions: ADJ Pinouts

PIN				I/O	DESCRIPTION
NAME	SOT-23	SC70	TO-92		
Anode	3	2	1	O	Anode pin, normally grounded
Cathode	2	3	2	I/O	Shunt current and output voltage
FB	1	5	3	I	Feedback pin for adjustable output voltage
NC**	—	—	—	—	**Must float or connect to anode
NC	—	1, 4	—	—	No connect

6 Specifications

6.1 Absolute Maximum Ratings

over operating free-air temperature range (unless otherwise noted)(1)(2)

			MIN	MAX	UNIT
Reverse current				20	mA
Forward current				10	mA
Maximum output voltage (LM4041-N ADJ, LM4041-N-Q1 ADJ)				15	V
Power dissipation (T_A = 25°C)(3)		DBZ package		306	mW
		LP package		550	mW
		DCK package		241	mW
Lead temperature	DBZ packages	Vapor phase (60 seconds)		215	°C
		Infrared (15 seconds)		220	°C
	LP package	Soldering (10 seconds)		260	°C
Storage temperature, T_{stg}			–65	150	°C

(1) Stresses beyond those listed under *Absolute Maximum Ratings* may cause permanent damage to the device. These are stress ratings only, which do not imply functional operation of the device at these or any other conditions beyond those indicated under *Recommended Operating Conditions*. Exposure to absolute-maximum-rated conditions for extended periods may affect device reliability.
(2) If Military/Aerospace specified devices are required, please contact the TI Sales Office/ Distributors for availability and specifications.
(3) The maximum power dissipation must be derated at elevated temperatures and is dictated by T_{Jmax} (maximum junction temperature), θ_{JA} (junction to ambient thermal resistance), and T_A (ambient temperature). The maximum allowable power dissipation at any temperature is $PD_{max} = (T_{Jmax} - T_A)/R_{\theta JA}$ or the number given in the *Absolute Maximum Ratings*, whichever is lower. For the LM4041-N, T_{Jmax} = 125°C, and the typical thermal resistance ($R_{\theta JA}$), when board mounted, is 326°C/W for the SOT-23 package, 415°C/W for the SC70 package and 180°C/W with 0.4-in lead length and 170°C/W with 0.125-in lead length for the TO-92 package.

Copyright © 1999–2016, Texas Instruments Incorporated

6.2 ESD Ratings

			VALUE	UNIT
$V_{(ESD)}$	Electrostatic discharge	Human-body model (HBM), per ANSI/ESDA/JEDEC JS-001 (1)(2)	±2000	V
		Charged-device model (CDM), per JEDEC specification JESD22-C101 (3)	±200	
		Machine model (MM)	±200	

(1) JEDEC document JEP155 states that 500-V HBM allows safe manufacturing with a standard ESD control process.
(2) The human-body model is a 100-pF capacitor discharged through a 1.5-kΩ resistor into each pin. The machine model is a 200-pF capacitor discharged directly into each pin. All pins are rated at 2 kV for human-body model, but the feedback pin which is rated at 1 kV.
(3) JEDEC document JEP157 states that 250-V CDM allows safe manufacturing with a standard ESD control process. Manufacturing with less than 250-V CDM is possible with the necessary precautions.

6.3 Recommended Operating Conditions

See (1)

		MIN	NOM	MAX	UNIT
Temperature		T_{min}	T_A	T_{max}	°C
Industrial temperature		–40	T_A	85	°C
Extended temperature		–40	T_A	125	°C
Reverse current	LM4041-N 1.2, LM4041-N-Q1 1.2	60		1200	µA
	LM4041-N ADJ, LM4041-N-Q1 ADJ	60		1200	µA
Output voltage	LM4041-N ADJ, LM4041-N-Q1 ADJ	1.24		10	V

(1) *Absolute Maximum Ratings* indicate limits beyond which damage to the device may occur. *Recommended Operating Conditions* indicate conditions for which the device is functional, but do not ensure specific performance limits. For ensured specifications and test conditions, see the *Electrical Characteristics*. The ensured specifications apply only for the test conditions listed. Some performance characteristics may degrade when the device is not operated under the listed test conditions.

6.4 Thermal Information

THERMAL METRIC (1)		LM4041-N		LM4041-N, LM4041-N-Q1	UNIT
		SC70	TO-92	SOT-23	
		5 PINS	3 PINS	3 PINS	
$R_{\theta JA}$	Junction-to-ambient thermal resistance	265.3	161.5	291.9	°C/W
$R_{\theta JC(top)}$	Junction-to-case (top) thermal resistance	93.1	84.5	114.3	°C/W
$R_{\theta JB}$	Junction-to-board thermal resistance	46.7	—	62.3	°C/W
ψ_{JT}	Junction-to-top characterization parameter	2.2	28.4	7.4	°C/W
ψ_{JB}	Junction-to-board characterization parameter	45.9	140.6	61	°C/W
$R_{\theta JC(bot)}$	Junction-to-case (bottom) thermal resistance	—	—	—	°C/W

(1) For more information about traditional and new thermal metrics, see the *Semiconductor and IC Package Thermal Metrics* application report, SPRA953.

Copyright © 1999–2016, Texas Instruments Incorporated

6.5 LM4041-N-xx 1.2 Electrical Characteristics (Industrial Temperature Range)

All limits $T_A = T_J = 25°C$ for the LM4041xAIM3, LM4041xBIM3, LM4041AIZ, LM4041BIZ and LM4041BIM7 devices, unless otherwise specified. The grades A and B designate initial reverse breakdown voltage tolerances of ±0.1% and ±0.2%, respectively.

PARAMETER		TEST CONDITIONS		MIN(1)	TYP(2)	MAX(1)	UNIT
V_R	Reverse breakdown voltage	I_R = 100 µA			1.225		V
	Reverse breakdown voltage tolerance(3)	I_R = 100 µA	LM4041AIM3, LM4041QAIM3 LM4041AIM3, LM4041AIZ			±1.2	mV
			LM4041BIM3, LM4041QBIM3 LM4041BIZ, LM4041BIM7			±2.4	
		$T_A = T_J = T_{MIN}$ to T_{MAX}	LM4041AIM3, LM4041QAIM3 LM4041AIM3, LM4041AIZ			±9.2	
			LM4041BIM3, LM4041QBIM3 LM4041BIZ, LM4041BIM7			±10.4	
I_{RMIN}	Minimum operating current	$T_A = T_J = 25°C$			45	60	µA
		$T_A = T_J = T_{MIN}$ to T_{MAX}				65	
$\Delta V_R/\Delta T$	Average reverse breakdown voltage temperature Coefficient(3)	I_R= 10 mA			±20		ppm/°C
		I_R = 1 mA	$T_A = T_J = 25°C$		±15		
			$T_A = T_J = T_{MIN}$ to T_{MAX}			±100	
		I_R = 100 µA			±15		
$\Delta V_R/\Delta I_R$	Reverse breakdown voltage change with operating current change(4)	$I_{RMIN} \le I_R \le 1$ mA	$T_A = T_J = 25°C$		0.7	1.5	mV
			$T_A = T_J = T_{MIN}$ to T_{MAX}			2	
		1 mA ≤ I_R ≤ 12 mA	$T_A = T_J = 25°C$		4	6	
			$T_A = T_J = T_{MIN}$ to T_{MAX}			8	
Z_R	Reverse dynamic impedance	I_R = 1 mA, f = 120 Hz, I_{AC}= 0.1 I_R			0.5	1.5	Ω
e_N	Wideband noise	I_R = 100 µA 10 Hz ≤ f ≤ 10 kHz			20		μV_{rms}
ΔV_R	Reverse breakdown voltage long-term stability	t = 1000 hrs T = 25°C ±0.1°C I_R = 100 µA			120		ppm
V_{HYST}	Thermal hysteresis(5)	ΔT = −40°C to +125°C			0.08%		

(1) Limits are 100% production tested at 25°C. Limits over temperature are ensured through correlation using Statistical Quality Control (SQC) methods. The limits are used to calculate AOQL.

(2) Typicals are at $T_J = 25°C$ and represent most likely parametric norm.

(3) The overtemperature limit for Reverse Breakdown Voltage Tolerance is defined as the room temperature Reverse Breakdown Voltage Tolerance ±[(ΔV_R↱ΔT)(V_R)]. Where, $\Delta V_R/\Delta T$ is the V_R temperature coefficient, maxΔT is the maximum difference in temperature from the reference point of 25 °C to T_{MAX} or T_{MIN}, and V_R is the reverse breakdown voltage. The total over-temperature tolerance for the different grades in the industrial temperature range where maxΔT = 65°C is shown below:
A-grade: ±0.75% = ±0.1% ±100 ppm/°C × 65°C
B-grade: ±0.85% = ±0.2% ±100 ppm/°C × 65°C
C-grade: ±1.15% = ±0.5% ±100 ppm/°C × 65°C
D-grade: ±1.98% = ±1.0% ±150 ppm/°C × 65°C
E-grade: ±2.98% = ±2.0% ±150 ppm/°C × 65°C
The total over-temperature tolerance for the different grades in the extended temperature range where max ΔT = 100 °C is shown below:
B-grade: ±1.2% = ±0.2% ±100 ppm/°C × 100°C
C-grade: ±1.5% = ±0.5% ±100 ppm/°C × 100°C
D-grade: ±2.5% = ±1.0% ±150 ppm/°C × 100°C
E-grade: ±4.5% = ±2.0% ±150 ppm/°C × 100°C
Therefore, as an example, the A-grade LM4041-N 1.2 has an over-temperature Reverse Breakdown Voltage tolerance of ±1.2 V × 0.75% = ±9.2 mV.

(4) Load regulation is measured on pulse basis from no load to the specified load current. Output changes due to die temperature change must be taken into account separately.

(5) Thermal hysteresis is defined as the difference in voltage measured at +25°C after cycling to temperature –40°C and the +25°C measurement after cycling to temperature +125°C.

Copyright © 1999–2016, Texas Instruments Incorporated

6.6 LM4041-N-xx 1.2 Electrical Characteristics (Industrial Temperature Range)

All limits $T_A = T_J = 25°C$. unless otherwise specified. The grades C, D, and E designate initial reverse breakdown voltage tolerances of ±0.5%, ±1.0%, and ±2.0%, respectively.

PARAMETER		TEST CONDITIONS			MIN(1)	TYP(2)	MAX(1)	UNIT
V_R	Reverse Breakdown Voltage	I_R = 100 µA				1.225		V
V_R	Reverse breakdown voltage tolerance(3)	I_R = 100 µA	$T_A = T_J = 25°C$	LM4041CIM3, LM4041QCIM3, LM4041CIZ, LM4041CIM7			±6	mV
				LM4041DIM3, LM4041QDIM3, LM4041DIZ, LM4041DIM7			±12	
				LM4041EIM3, LM4041QEIM3, LM4041EIZ, LM4041EIM7			±25	
			$T_A = T_J = T_{MIN}$ to T_{MAX}	LM4041CIM3, LM4041QCIM3, LM4041CIZ, LM4041CIM7			±14	
				LM4041DIM3, LM4041QDIM3, LM4041DIZ, LM4041DIM7			±24	
				LM4041EIM3, LM4041QEIM3, LM4041EIZ, LM4041EIM7			±36	
I_{RMIN}	Minimum operating current	$T_A = T_J = 25°C$		LM4041CIM3, LM4041QCIM3, LM4041CIZ, LM4041CIM7		45	60	µA
				LM4041DIM3, LM4041QDIM3, LM4041DIZ, LM4041DIM7 LM4041EIM3, LM4041QEIM3, LM4041EIZ, LM4041EIM7			65	
		$T_A = T_J = T_{MIN}$ to T_{MAX}		LM4041CIM3, LM4041QCIM3, LM4041CIZ, LM4041CIM7			65	
				LM4041DIM3, LM4041QDIM3, LM4041DIZ, LM4041DIM7 LM4041EIM3, LM4041QEIM3, LM4041EIZ, LM4041EIM7			70	
$\Delta V_R/\Delta T$	V_R Temperature coefficient(3)	I_R = 10 mA				±20		ppm/°C
		I_R = 1 mA	$T_A = T_J = 25°C$			±15		
			$T_A = T_J = T_{MIN}$ to T_{MAX}	LM4041CIM3, LM4041QCIM3, LM4041CIZ, LM4041CIM7			±100	
				LM4041DIM3, LM4041QDIM3, LM4041DIZ, LM4041DIM7 LM4041EIM3, LM4041QEIM3, LM4041EIZ, LM4041EIM7			±150	
		I_R= 100 µA				±15		

(1) Limits are 100% production tested at 25°C. Limits over temperature are ensured through correlation using Statistical Quality Control (SQC) methods. The limits are used to calculate AOQL.

(2) Typicals are at $T_J = 25°C$ and represent most likely parametric norm.

(3) The overtemperature limit for reverse breakdown voltage tolerance is defined as the room temperature reverse breakdown voltage tolerance ±[(ΔV_R↱ΔT)(max ΔT)(V_R)]. Where, $\Delta V_R/\Delta T$ is the V_R temperature coefficient, maxΔT is the maximum difference in temperature from the reference point of 25 °C to T_{MAX} or T_{MIN}, and V_R is the reverse breakdown voltage. The total over-temperature tolerance for the different grades in the industrial temperature range where maxΔT = 65°C is shown below:
A-grade: ±0.75% = ±0.1% ±100 ppm/°C × 65°C
B-grade: ±0.85% = ±0.2% ±100 ppm/°C × 65°C
C-grade: ±1.15% = ±0.5% ±100 ppm/°C × 65°C
D-grade: ±1.98% = ±1.0% ±150 ppm/°C × 65°C
E-grade: ±2.98% = ±2.0% ±150 ppm/°C × 65°C
The total over-temperature tolerance for the different grades in the extended temperature range where max ΔT = 100 °C is shown below:
B-grade: ±1.2% = ±0.2% ±100 ppm/°C × 100°C
C-grade: ±1.5% = ±0.5% ±100 ppm/°C × 100°C
D-grade: ±2.5% = ±1.0% ±150 ppm/°C × 100°C
E-grade: ±4.5% = ±2.0% ±150 ppm/°C × 100°C
Therefore, as an example, the A-grade LM4041-N 1.2 has an over-temperature reverse breakdown voltage tolerance of ±1.2 V × 0.75% = ±9.2 mV.

Copyright © 1999–2016, Texas Instruments Incorporated

LM4041-N-xx 1.2 Electrical Characteristics (Industrial Temperature Range) (continued)

All limits $T_A = T_J = 25°C$. unless otherwise specified. The grades C, D, and E designate initial reverse breakdown voltage tolerances of ±0.5%, ±1.0%, and ±2.0%, respectively.

PARAMETER		TEST CONDITIONS			MIN(1)	TYP(2)	MAX(1)	UNIT
$\Delta V_R/\Delta I_R$	Reverse breakdown voltage change with operating current change(4)	$I_{RMIN} \le I_R \le 1$ mA	$T_A = T_J = 25°C$	LM4041CIM3, LM4041QCIM3, LM4041CIZ, LM4041CIM7		0.7	1.5	mV
				LM4041DIM3, LM4041QDIM3, LM4041DIZ, LM4041DIM7 (LM4041EIM3, LM4041QEIM3, LM4041EIZ, LM4041EIM7			2	
			$T_A = T_J = T_{MIN}$ to T_{MAX}	LM4041CIM3, LM4041QCIM3, LM4041CIZ, LM4041CIM7			2	
				LM4041DIM3, LM4041QDIM3, LM4041DIZ, LM4041DIM7 LM4041EIM3, LM4041QEIM3, LM4041EIZ, LM4041EIM7)			2.5	
		1 mA ≤ I_R ≤ 12 mA	$T_A = T_J = 25°C$	LM4041CIM3, LM4041QCIM3, LM4041CIZ, LM4041CIM7		2.5	6	mV
				LM4041DIM3, LM4041QDIM3, LM4041DIZ, LM4041DIM7 LM4041EIM3, LM4041QEIM3, LM4041EIZ, LM4041EIM7			8	
			$T_A = T_J = T_{MIN}$ to T_{MAX}	LM4041CIM3, LM4041QCIM3, LM4041CIZ, LM4041CIM7			8	
				LM4041DIM3, LM4041QDIM3, LM4041DIZ, LM4041DIM7 LM4041EIM3, LM4041QEIM3, LM4041EIZ, LM4041EIM7			10	
Z_R	Reverse dynamic impedance	I_R = 1 mA, f = 120 Hz I_{AC} = 0.1 I_R		LM4041CIM3, LM4041QCIM3, LM4041CIZ, LM4041CIM7		0.5	1.5	Ω
				LM4041DIM3, LM4041QDIM3, LM4041DIZ, LM4041DIM7 LM4041EIM3, LM4041QEIM3, LM4041EIZ, LM4041EIM7			2	
e_N	Wideband noise	I_R = 100 µA 10 Hz ≤ f ≤ 10 kHz				20		μV_{rms}
ΔV_R	Reverse breakdown voltage long-term stability	t = 1000 hrs T = 25°C ±0.1°C I_R = 100 µA				120		ppm
V_{HYST}	Thermal hysteresis(5)	ΔT = −40°C to +125°C				0.08%		

(4) Load regulation is measured on pulse basis from no load to the specified load current. Ouput changes due to die temperature change must be taken into account separately.
(5) Thermal hysteresis is defined as the difference in voltage measured at +25°C after cycling to temperature –40°C and the +25°C measurement after cycling to temperature +125°C.

Copyright © 1999–2016, Texas Instruments Incorporated

6.7 LM4041-N-xx 1.2 Electrical Characteristics (Extended Temperature Range)

All limits $T_A = T_J = 25°C$, unless otherwise specified. The grades C, D, and E designate initial reverse breakdown voltage tolerance of ±0.5%, ±1.0%, and ±2.0% respectively.

PARAMETER		TEST CONDITIONS			MIN(1)	TYP(2)	MAX(1)	UNIT
V_R	Reverse breakdown voltage	I_R = 100 µA				1.225		V
V_R	Reverse breakdown voltage error(3)	I_R = 100 µA	$T_A = T_J = 25°C$	LM4041CEM3, LM4041QCEM3			±6	mV
				LM4041DEM3, LM4041QDEM3			±12	
				LM4041EEM3, LM4041QEEM3			±25	
			$T_A = T_J = T_{MIN}$ to T_{MAX}	LM4041CEM3, LM4041QCEM3			±18.4	
				LM4041DEM3, LM4041QDEM3			±31	
				LM4041EEM3, LM4041QEEM3			±43	
I_{RMIN}	Minimum operating current	$T_A = T_J = 25°C$		LM4041CEM3, LM4041QCEM3		45	60	µA
				LM4041DEM3, LM4041QDEM3 LM4041EEM3, LM4041QEEM3			65	
		LM4041EEM3, LM4041QEEM3		LM4041CEM3, LM4041QCEM3			68	
				LM4041DEM3, LM4041QDEM3 LM4041EEM3, LM4041QEEM3			73	
$\Delta V_R/\Delta T$	VR temperature coefficient(3)	LM4041EEM3, LM4041QEEM3				±20		ppm/°C
		I_R = 1 mA	$T_A = T_J = 25°C$			±15		
			$T_A = T_J = T_{MIN}$ to T_{MAX}	LM4041CEM3, LM4041QCEM3			±100	
				LM4041DEM3, LM4041QDEM3 LM4041EEM3, LM4041QEEM3			±150	
		LM4041EEM3, LM4041QEEM3				±15		

(1) Limits are 100% production tested at 25°C. Limits over temperature are ensured through correlation using Statistical Quality Control (SQC) methods. The limits are used to calculate AOQL.
(2) Typicals are at T_J = 25°C and represent most likely parametric norm.
(3) The overtemperature limit for reverse breakdown voltage tolerance is defined as the room temperature reverse breakdown voltage tolerance ±[(ΔV_R↱ΔT)(max ΔT)(V_R)]. Where, $\Delta V_R/\Delta T$ is the V_R temperature coefficient, maxΔT is the maximum difference in temperature from the reference point of 25 °C to T_{MAX} or T_{MIN}, and V_R is the reverse breakdown voltage. The total over-temperature tolerance for the different grades in the industrial temperature range where maxΔT = 65°C is shown below:
A-grade: ±0.75% = ±0.1% ±100 ppm/°C × 65°C
B-grade: ±0.85% = ±0.2% ±100 ppm/°C × 65°C
C-grade: ±1.15% = ±0.5% ±100 ppm/°C × 65°C
D-grade: ±1.98% = ±1.0% ±150 ppm/°C × 65°C
E-grade: ±2.98% = ±2.0% ±150 ppm/°C × 65°C
The total over-temperature tolerance for the different grades in the extended temperature range where max ΔT = 100 °C is shown below:
B-grade: ±1.2% = ±0.2% ±100 ppm/°C × 100°C
C-grade: ±1.5% = ±0.5% ±100 ppm/°C × 100°C
D-grade: ±2.5% = ±1.0% ±150 ppm/°C × 100°C
E-grade: ±4.5% = ±2.0% ±150 ppm/°C × 100°C
Therefore, as an example, the A-grade LM4041-N 1.2 has an over-temperature reverse breakdown voltage tolerance of ±1.2 V × 0.75% = ±9.2 mV.

Copyright © 1999–2016, Texas Instruments Incorporated

LM4041-N-xx 1.2 Electrical Characteristics (Extended Temperature Range) (continued)

All limits $T_A = T_J = 25°C$, unless otherwise specified. The grades C, D, and E designate initial reverse breakdown voltage tolerance of ±0.5%, ±1.0%, and ±2.0% respectively.

PARAMETER		TEST CONDITIONS			MIN(1)	TYP(2)	MAX(1)	UNIT
$\Delta V_R/\Delta I_R$	Reverse breakdown change with current(4)	$I_{RMIN} \le I_R \le 1.0$ mA	$T_A = T_J = 25°C$	LM4041CEM3, LM4041QCEM3		0.7	1.5	mV
				LM4041DEM3, LM4041QDEM3 LM4041EEM3, LM4041QEEM3			2	
			LM4041EEM3, LM4041QEEM3	LM4041CEM3, LM4041QCEM3			2	
				LM4041DEM3, LM4041QDEM3 M4041EEM3, LM4041QEEM3			2.5	
		1 mA ≤ I_R ≤ 12 mA	LM4041EEM3, LM4041QEEM3	LM4041CEM3, LM4041QCEM3		2.5	6	mV
				LM4041DEM3, LM4041QDEM3 LM4041EEM3, LM4041QEEM3			8	
			LM4041EEM3, LM4041QEEM3	LM4041CEM3, LM4041QCEM3			8	
				LM4041DEM3, LM4041QDEM3 LM4041EEM3, LM4041QEEM3			10	
Z_R	Reverse dynamic impedance	I_R = 1 mA, f = 120 Hz, I_{AC}= 0.1 I_R	$T_A = T_J = 25°C$			0.5		Ω
			$T_A = T_J = T_{MIN}$ to T_{MAX}	LM4041CEM3, LM4041QCEM3			1.5	
				LM4041DEM3, LM4041QDEM3 LM4041EEM3, LM4041QEEM3			2	
e_N	Noise voltage	I_R = 100 µA 10 Hz ≤ f ≤ 10 kHz				20		μV_{rms}
ΔV_R	Long-term stability (non-cumulative)	t = 1000 hrs T = 25°C ±0.1°C I_R = 100 µA				120		ppm
V_{HYST}	Thermal hysteresis(5)	ΔT = −40°C to +125°C				0.08%		

(4) Load regulation is measured on pulse basis from no load to the specified load current. Ouput changes due to die temperature change must be taken into account separately.
(5) Thermal hysteresis is defined as the difference in voltage measured at +25°C after cycling to temperature –40°C and the +25°C measurement after cycling to temperature +125°C.

Copyright © 1999–2016, Texas Instruments Incorporated

6.8 LM4041-N-xx ADJ (Adjustable) Electrical Characteristics (Industrial Temperature Range)

All limits T_J = 25°C, unless otherwise specified (SOT-23, see(1)),
$I_{RMIN} \le I_R \le 12$ mA, $V_{REF} \le V_{OUT} \le 10$ V. The grades C and D designate initial Reference Voltage Tolerances of ±0.5% and ±1%, respectively for V_{OUT} = 5 V.

PARAMETER		TEST CONDITIONS			MIN(2)	TYP(3)	MAX(2)	UNIT
V_{REF}	Reference voltage	I_R = 100 µA, V_{OUT} = 5 V				1.233		V
	Reference voltage tolerance(4)	I_R = 100 µA, V_{OUT} = 5 V	T_J = 25°C	LM4041CIM3, LM4041QCIM3, LM4041CIZ, LM4041CIM7			±6.2	mV
				LM4041DIM3, LM4041QDIM3, LM4041DIZ, LM4041DIM7			±12	
			$T_A = T_J = T_{MIN}$ to T_{MAX}	LM4041CIM3, LM4041QCIM3, LM4041CIZ, LM4041CIM7			±14	
				LM4041DIM3, LM4041QDIM3, LM4041DIZ, LM4041DIM7			±24	
I_{RMIN}	Minimum operating current	T_J = 25°C		LM4041CIM3, LM4041QCIM3, LM4041CIZ, LM4041CIM7		45	60	µA
				LM4041DIM3, LM4041QDIM3, LM4041DIZ, LM4041DIM7			65	
		$T_A = T_J = T_{MIN}$ to T_{MAX}		LM4041CIM3, LM4041QCIM3, LM4041CIZ, LM4041CIM7			65	
				LM4041DIM3, LM4041QDIM3, LM4041DIZ, LM4041DIM7			70	
$\Delta V_{REF}/\Delta I_R$	Reference voltage change with operating current change(5)	$I_{RMIN} \le I_R \le 1$ mA SOT-23: $V_{OUT} \ge 1.6$ V(1)	T_J = 25°C	LM4041CIM3, LM4041QCIM3, LM4041CIZ, LM4041CIM7		0.7	1.5	mV
				LM4041DIM3, LM4041QDIM3, LM4041DIZ, LM4041DIM7			2	
			$T_A = T_J = T_{MIN}$ to T_{MAX}	LM4041CIM3, LM4041QCIM3, LM4041CIZ, LM4041CIM7			2	
				LM4041DIM3, LM4041QDIM3, LM4041DIZ, LM4041DIM7			2.5	
		1 mA ≤ I_R ≤ 12 mA SOT-23: $V_{OUT} \ge 1.6$ V(1)	T_J = 25°C	LM4041CIM3, LM4041QCIM3, LM4041CIZ, LM4041CIM7		2	4	mV
				LM4041DIM3, LM4041QDIM3, LM4041DIZ, LM4041DIM7			6	
			$T_A = T_J = T_{MIN}$ to T_{MAX}	LM4041CIM3, LM4041QCIM3, LM4041CIZ, LM4041CIM7			6	
				LM4041DIM3, LM4041QDIM3, LM4041DIZ, LM4041DIM7			8	
$\Delta V_{REF}/\Delta V_O$	Reference voltage change with output voltage change	I_R = 1 mA	T_J = 25°C	LM4041CIM3, LM4041QCIM3, LM4041CIZ, LM4041CIM7		–1.55	–2	mV/V
				LM4041DIM3, LM4041QDIM3, LM4041DIZ, LM4041DIM7			–2.5	
			$T_A = T_J = T_{MIN}$ to T_{MAX}	LM4041CIM3, LM4041QCIM3, LM4041CIZ, LM4041CIM7			–2.5	
				LM4041DIM3, LM4041QDIM3, LM4041DIZ, LM4041DIM7			–3	
I_{FB}	Feedback current	T_J = 25°C		LM4041CIM3, LM4041QCIM3, LM4041CIZ, LM4041CIM7		60	100	nA
				LM4041DIM3, LM4041QDIM3, LM4041DIZ, LM4041DIM7			150	
		$T_A = T_J = T_{MIN}$ to T_{MAX}					120	

(1) When $V_{OUT} \le 1.6$ V, the LM4041-N ADJ in the SOT-23 package must operate at reduced I_R. This is caused by the series resistance of the die attach between the die (–) output and the package (–) output pin. See the *Output Saturation (SOT-23 only)* curve in the *Typical Characteristics* section.
(2) Limits are 100% production tested at 25°C. Limits over temperature are ensured through correlation using Statistical Quality Control (SQC) methods. The limits are used to calculate AOQL.
(3) Typicals are at T_J = 25°C and represent most likely parametric norm.
(4) Reference voltage and temperature coefficient will change with output voltage. See *Typical Characteristics* curves.
(5) Load regulation is measured on pulse basis from no load to the specified load current. Ouput changes due to die temperature change must be taken into account separately.

Copyright © 1999–2016, Texas Instruments Incorporated

LM4041-N-xx ADJ (Adjustable) Electrical Characteristics (Industrial Temperature Range) (continued)

All limits T_J = 25°C, unless otherwise specified (SOT-23, see(1)),
$I_{RMIN} \le I_R \le 12$ mA, $V_{REF} \le V_{OUT} \le 10$ V. The grades C and D designate initial Reference Voltage Tolerances of ±0.5% and ±1%, respectively for V_{OUT} = 5 V.

PARAMETER		TEST CONDITIONS				MIN(2)	TYP(3)	MAX(2)	UNIT
$\Delta V_{REF}/\Delta T$	Average reference voltage temperature coefficient(4)	V_{OUT} = 5 V	I_R = 10 mA				20		ppm/°C
			I_R = 1 mA	T_J = 25°C			15		
				$T_A = T_J = T_{MIN}$ to T_{MAX}	LM4041CIM3, LM4041QCIM3, LM4041CIZ, LM4041CIM7			±100	
					LM4041DIM3, LM4041QDIM3, LM4041DIZ, LM4041DIM7			±150	
			I_R = 100 µA				15		
Z_{OUT}	Dynamic output impedance	I_R = 1 mA, f = 120 Hz, I_{AC} = 0.1 I_R					0.3		Ω
		$V_{OUT} = V_{REF}$ V_{OUT} = 10 V					2		
e_N	Wideband noise	$V_{OUT} = V_{REF}$ I_R = 100 µA 10 Hz ≤ f ≤ 10 kHz					20		μV_{rms}
ΔV_{REF}	Reference voltage long-term stability	t = 1000 hrs, I_R = 100 µA, T = 25°C ±0.1°C					120		ppm
V_{HYST}	Thermal hysteresis(6)	ΔT = −40°C to +125°C					0.08%		

(6) Thermal hysteresis is defined as the difference in voltage measured at +25°C after cycling to temperature –40°C and the +25°C measurement after cycling to temperature +125°C.

Copyright © 1999–2016, Texas Instruments Incorporated

6.9 LM4041-N-xx ADJ (Adjustable) Electrical Characteristics (Extended Temperature Range)

All limits T_J = 25°C, unless otherwise specified (SOT-23, see(1)), $I_{RMIN} \le I_R \le 12$ mA, $V_{REF} \le V_{OUT} \le 10$ V. The grades C and D designate initial Reference Voltage Tolerances of ±0.5% and ±1%, respectively for V_{OUT} = 5 V.

PARAMETER		TEST CONDITIONS				MIN(2)	TYP(3)	MAX(2)	UNIT
V_{REF}	Reference voltage	I_R = 100 µA, V_{OUT} = 5 V					1.233		V
	Reference voltage tolerance(4)	I_R = 100 µA, V_{OUT} = 5 V	T_J = 25°C	LM4041CEM3, LM4041QCEM3				±6.2	mV
				LM4041DEM3, LM4041QDEM3				±12	
			$T_A = T_J = T_{MIN}$ to T_{MAX}	LM4041CEM3, LM4041QCEM3				±18	
				LM4041DEM3, LM4041QDEM3				±30	
I_{RMIN}	Minimum operating current	T_J = 25°C		LM4041CEM3, LM4041QCEM3			45	60	µA
				LM4041DEM3, LM4041QDEM3				65	
		$T_A = T_J = T_{MIN}$ to T_{MAX}		LM4041CEM3, LM4041QCEM3				68	
				LM4041DEM3, LM4041QDEM3				73	
$\Delta V_{REF}/\Delta I_R$	Reference voltage change with operating current change(5)	$I_{RMIN} \le I_R \le 1$ mA SOT-23: $V_{OUT} \ge 1.6$ V(1)	T_J = 25°C	LM4041CEM3, LM4041QCEM3			0.7	1.5	mV
				LM4041DEM3, LM4041QDEM3				2	
			$T_A = T_J = T_{MIN}$ to T_{MAX}	LM4041CEM3, LM4041QCEM3				2	
				LM4041DEM3, LM4041QDEM3				2.5	
		1 mA ≤ I_R ≤ 12 mA SOT-23: $V_{OUT} \ge 1.6$ V(1)	T_J = 25°C	LM4041CEM3, LM4041QCEM3			2	8	mV
				LM4041DEM3, LM4041QDEM3				10	
			$T_A = T_J = T_{MIN}$ to T_{MAX}	LM4041CEM3, LM4041QCEM3				6	
				LM4041DEM3, LM4041QDEM3				8	
$\Delta V_{REF}/\Delta V_O$	Reference voltage change with output voltage change	I_R = 1 mA	T_J = 25°C	LM4041CEM3, LM4041QCEM3			–1.55	–2	mV/V
				LM4041DEM3, LM4041QDEM3				–2.5	
			$T_A = T_J = T_{MIN}$ to T_{MAX}	LM4041CEM3, LM4041QCEM3				–3	
				LM4041DEM3, LM4041QDEM3				–4	
I_{FB}	Feedback current	T_J = 25°C		LM4041CEM3, LM4041QCEM3			60	100	nA
				LM4041DEM3, LM4041QDEM3				150	
		$T_A = T_J = T_{MIN}$ to T_{MAX}		LM4041CEM3, LM4041QCEM3				120	
				LM4041DEM3, LM4041QDEM3				200	
$\Delta V_{REF}/\Delta T$	Average reference voltage temperature coefficient(4)	V_{OUT} = 5 V,	I_R = 10 mA				20		ppm/°C
			I_R = 1 mA	T_J = 25°C			15		
				$T_A = T_J = T_{MIN}$ to T_{MAX}	LM4041CEM3, LM4041QCEM3			±100	
					LM4041DEM3, LM4041QDEM3			±150	
			I_R = 100 µA				15		
Z_{OUT}	Dynamic output impedance	I_R = 1 mA, f = 120 Hz,					0.3		Ω
		I_{AC} = 0.1 I_R							
			$V_{OUT} = V_{REF}$						
			V_{OUT} = 10 V				2		
e_N	Wideband noise	I_R = 100 µA,	$V_{OUT} = V_{REF}$				20		μV_{rms}
		10 Hz ≤ f ≤ 10 kHz							
ΔV_{REF}	Reference voltage long-term stability	t = 1000 hrs, I_R = 100 µA, T = 25°C ±0.1°C					120		ppm
V_{HYST}	Thermal hysteresis(6)	ΔT = −40°C to +125°C					0.08%		

(1) When $V_{OUT} \le 1.6$ V, the LM4041-N ADJ in the SOT-23 package must operate at reduced I_R. This is caused by the series resistance of the die attach between the die (–) output and the package (–) output pin. See the *Output Saturation (SOT-23 only)* curve in the *Typical Characteristics* section.
(2) Limits are 100% production tested at 25°C. Limits over temperature are ensured through correlation using Statistical Quality Control (SQC) methods. The limits are used to calculate AOQL.
(3) Typicals are at T_J = 25°C and represent most likely parametric norm.
(4) Reference voltage and temperature coefficient will change with output voltage. See *Typical Characteristics* curves.
(5) Load regulation is measured on pulse basis from no load to the specified load current. Ouput changes due to die temperature change must be taken into account separately.
(6) Thermal hysteresis is defined as the difference in voltage measured at +25°C after cycling to temperature –40°C and the +25°C measurement after cycling to temperature +125°C.

Copyright © 1999–2016, Texas Instruments Incorporated

6.10 Typical Characteristics

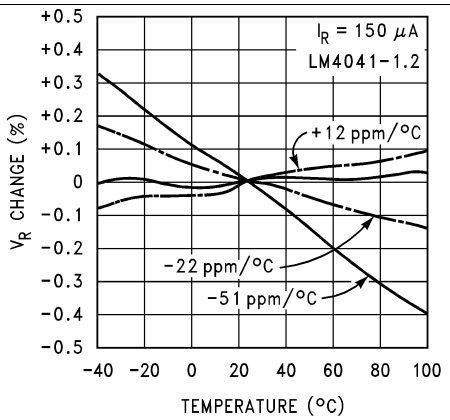

Figure 1. Temperature Drift for Different Average Temperature Coefficient

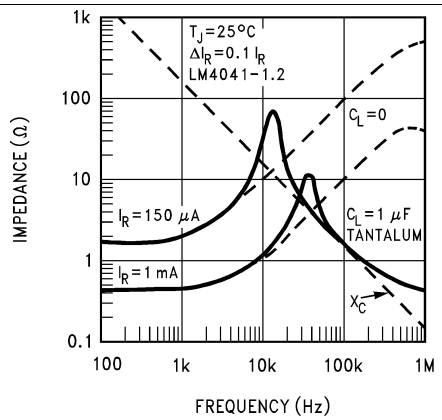

Figure 2. Output Impedance vs Frequency

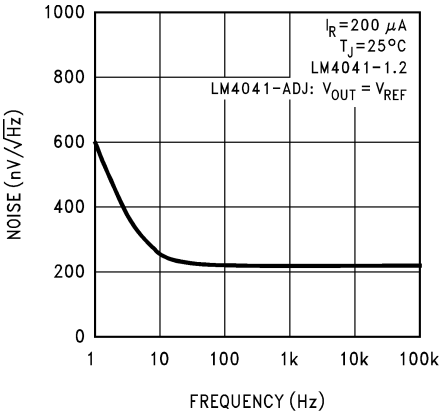

Figure 3. Noise Voltage

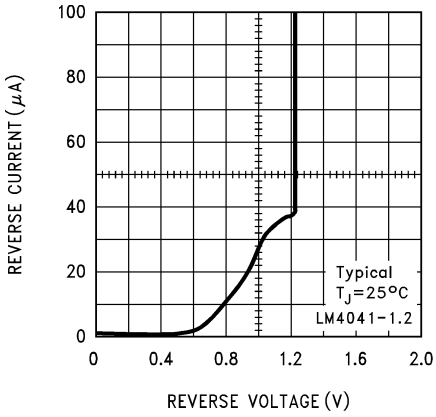

Figure 4. Reverse Characteristics and Minimum Operating Current

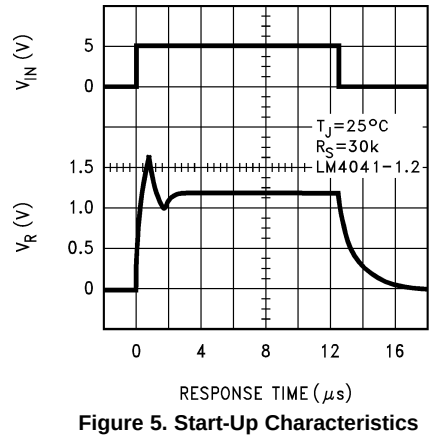

Figure 5. Start-Up Characteristics

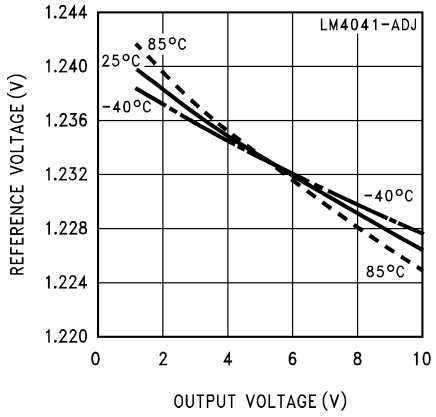

Figure 6. Reference Voltage vs Output Voltage and Temperature

Copyright © 1999–2016, Texas Instruments Incorporated

Typical Characteristics (continued)

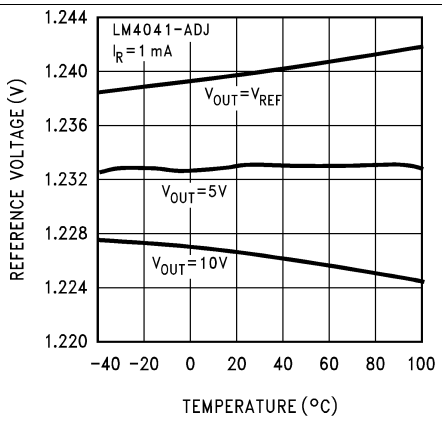

Figure 7. Reference Voltage vs Temperature and Output Voltage

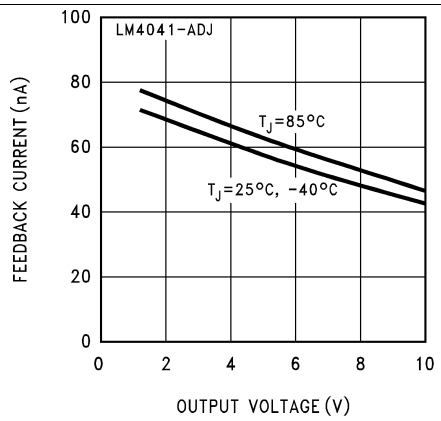

Figure 8. Feedback Current vs Output Voltage and Temperature

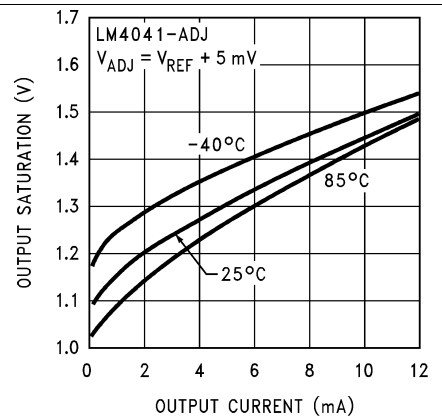

Figure 9. Output Saturation (SOT-23 Only)

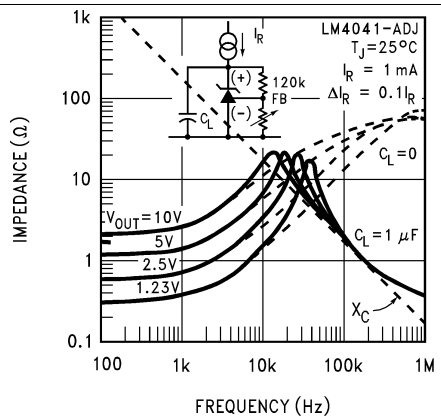

Figure 10. Output Impedance vs Frequency

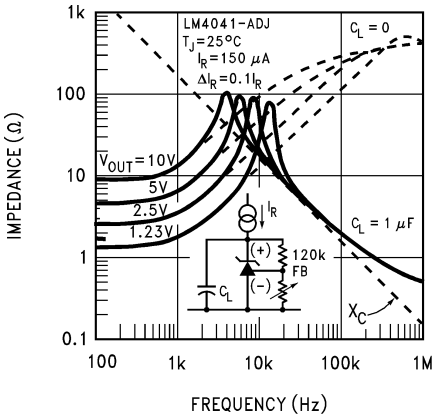

Figure 11. Output Impedance vs Frequency

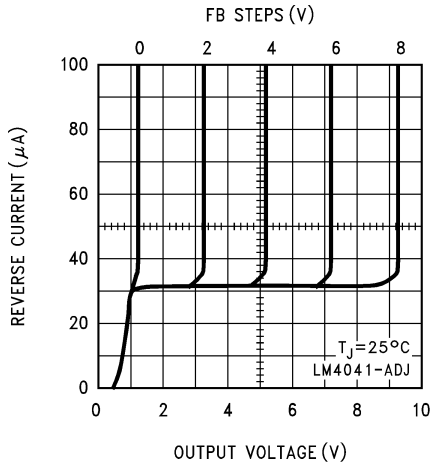

Figure 12. Reverse Characteristics

Typical Characteristics (continued)

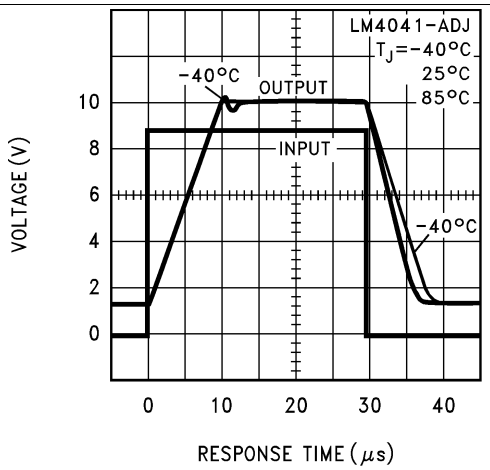

Figure 13. Large Signal Response

Copyright © 1999–2016, Texas Instruments Incorporated

7 Parameter Measurement Information

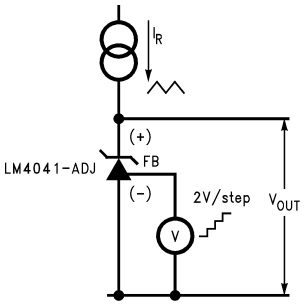

Figure 14. Adjustable Output Test Circuit

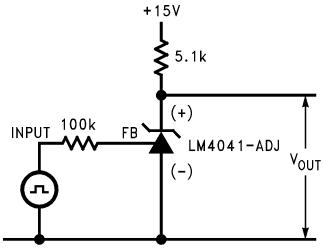

Figure 15. Line Transient Test Circuit

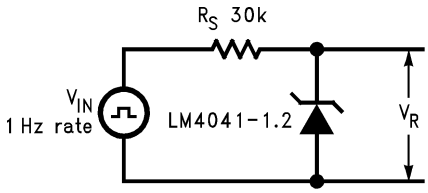

Figure 16. Start-Up and Shutdown Test Circuit

8 Detailed Description

8.1 Overview

The LM4041 is a precision micro-power shunt voltage reference available in both a fixed and output voltage and adjustable output voltage options. The part has three different packages available to meet small footprint requirements. It is also available in five different tolerance grades.

8.2 Functional Block Diagram

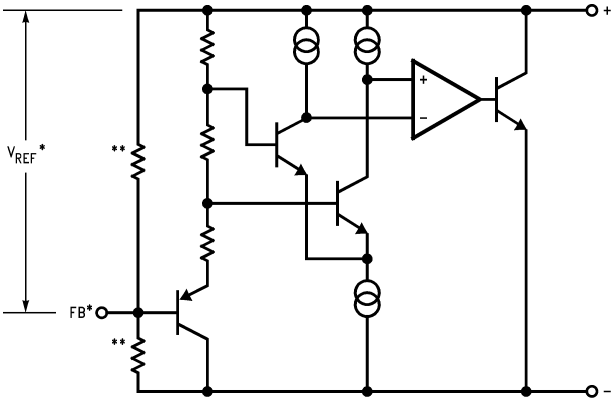

*LM4041-N ADJ only
**LM4041-N 1.2 only

8.3 Feature Description

The LM4041 is effectively a precision Zener diode. The part requires a small quiescent current for regulation, and regulates the output voltage by shunting more or less current to ground, depending on input voltage and load. The only external component requirement is a resistor between the cathode and the input voltage to set the input current. An external capacitor can be used on the input or output, but is not required.

Copyright © 1999–2016, Texas Instruments Incorporated

8.4 Device Functional Modes

The LM4041 has fixed output voltage options as well as adjustable output voltage options. The fixed output parts can only be used in closed-loop operation, as the feedback is internal. The adjustable option parts are most commonly operated in closed-loop mode, where the feedback node is tied to the output voltage through a resistor divider. The output voltage will remain as long as I_R is between I_{RMIN} and I_{RMAX}; see *LM4041-N-xx 1.2 Electrical Characteristics (Industrial Temperature Range)*. This part can also be used in open-loop mode to act as a comparator, driving the feedback node from another voltage source.

Copyright © 1999–2016, Texas Instruments Incorporated

9 Application and Implementation

NOTE

Information in the following applications sections is not part of the TI component specification, and TI does not warrant its accuracy or completeness. TI's customers are responsible for determining suitability of components for their purposes. Customers should validate and test their design implementation to confirm system functionality.

9.1 Application Information

The LM4041-N is a precision micro-power curvature-corrected bandgap shunt voltage reference. For space-critical applications, the LM4041-N is available in the sub-miniature SOT-23 and SC70 surface-mount package. The LM4041-N has been designed for stable operation without the need of an external capacitor connected between the + pin and the – pin. If, however, a bypass capacitor is used, the LM4041-N remains stable. Design effort is further reduced with the choice of either a fixed 1.2 V or an adjustable reverse breakdown voltage. The minimum operating current is 60 µA for the LM4041-N 1.2 V and the LM4041-N ADJ. Both versions have a maximum operating current of 12 mA.

LM4041-Ns using the SOT-23 package have pin 3 connected as the (–) output through the die attach interface of the package. Therefore, pin 3 of the LM4041-N 1.2 must be left floating or connected to pin 2 and pin 3 of the LM4041-N ADJ pinout.

The LM4041-N devices using the SC70 package have pin 2 connected as the (–) output through the die attach interface of the package. Therefore, the LM4041-N pin 2 of the LM4041-N 1.2 must be left floating or connected to pin 1, and the pin 2 of the LM4041-N ADJ is the (–) output.

The typical thermal hysteresis specification is defined as the change in 25°C voltage measured after thermal cycling. The device is thermal cycled to temperature –40°C and then measured at +25°C. Next the device is thermal cycled to temperature 125°C and again measured at 25°C. The resulting V_{OUT} delta shift between the 25°C measurements is thermal hysteresis. Thermal hysteresis is common in precision references and is induced by thermal-mechanical package stress. Changes in environmental storage temperature, operating temperature and board mounting temperature are all factors that can contribute to thermal hysteresis.

In a conventional shunt regulator application (Figure 17), an external series resistor (R_S) is connected between the supply voltage and the LM4041-N. R_S determines the current that flows through the load (I_L) and the LM4041-N (I_Q). Because load current and supply voltage may vary, R_S must be small enough to supply at least the minimum acceptable I_Q to the LM4041-N even when the supply voltage is at its minimum and the load current is at its maximum value. When the supply voltage is at its maximum and I_L is at its minimum, R_S must be large enough so that the current flowing through the LM4041-N is less than 12 mA.

R_S must be selected based on the supply voltage, (V_S), the desired load and operating current, (I_L and I_Q), and the reverse breakdown voltage of the LM4041-N, V_R.

$$R_S = \frac{V_S - V_R}{I_L + I_Q} \quad (1)$$

The output voltage of the LM4041-N SDJ can be adjusted to any value in the range of 1.24 V through 10 V. It is a function of the internal reference voltage (V_{REF}) and the ratio of the external feedback resistors as shown in Figure 19 . The output voltage is found using Equation 2.

$$V_O = V_{REF}[(R2/R1) + 1] \quad (2)$$

where

- V_O is the output voltage.

The actual value of the internal V_{REF} is a function of V_O. The *corrected* V_{REF} is determined by Equation 3.

$$V_{REF} = \Delta V_O \, (\Delta V_{REF}/\Delta V_O) + V_Y \quad (3)$$

where

- V_Y = 1.240 V
- and $\Delta V_O = (V_O - V_Y)$

Copyright © 1999–2016, Texas Instruments Incorporated

Application Information (continued)

$\Delta V_{REF}/\Delta V_O$ is found in the electrical characteristics tables in the *Specifications* and is typically −1.55 mV/V. You can get a more accurate indication of the output voltage by replacing the value of V_{REF} in Equation 2 with the value found using Equation 3.

NOTE

The actual output voltage can deviate from that predicted using the typical value of $\Delta V_{REF} / \Delta V_O$ in Equation 3. For C-grade parts, the worst-case $\Delta V_{REF} / \Delta V_O$ is −2.5 mV/V. For D-grade parts, the worst-case $\Delta V_{REF} / \Delta V_O$ is −3.0 mV/V.

9.2 Typical Applications

9.2.1 Shunt Regulator

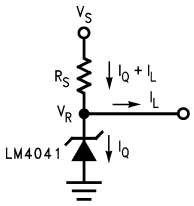

Figure 17. Shunt Regulator

9.2.1.1 Design Requirements

$V_{IN} > V_{OUT}$

Select R_S with Equation 4.

$$I_{RMIN} < I_R < I_{RMAX} = 15 \text{ mA} \quad (4)$$

See the electrical characteristics tables in the *Specifications* for minimum operating current for each voltage option and grade.

9.2.1.2 Detailed Design Procedure

The resistor R_S must be selected such that current I_R remains in the operational region of the part for the entire V_{IN} range and load current range. At its maximum, the R_S must be small enough for I_R to remain above I_{RMN}. The other extreme is when V_{IN} at its maximum and the load at its minimum; the R_S must be large enough to maintain $I_R < I_{RMAX}$. If unsure, try using 0.1 mA ≤ I_R ≤ 1 mA as starting point. Just remember the value of I_R varies with input and voltage load.

Use equations Equation 5 and Equation 6 to set R_S between R_{S_MIN} and R_{S_MAX}.

$$R_{S_MIN} = \frac{V_{IN_MAX} - V_{OUT}}{I_{LOAD_MIN} + I_{R_MAX}} \quad (5)$$

$$R_{S_MAX} = \frac{V_{IN_MIN} - V_{OUT}}{I_{LOAD_MAX} + I_{R_MIN}} \quad (6)$$

Copyright © 1999–2016, Texas Instruments Incorporated

Typical Applications (continued)

9.2.1.3 Application Curve

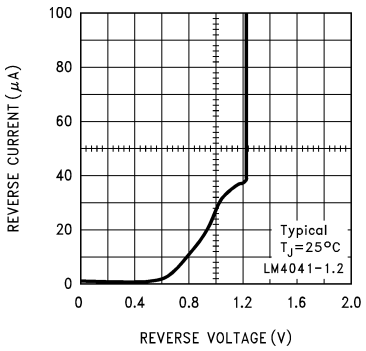

Figure 18. Reverse Characteristics and Minimum Operating Current

9.2.2 Adjustable Shunt Regulator

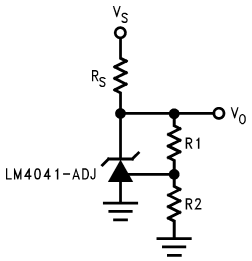

$V_O = V_{REF}[(R2/R1) + 1]$

Figure 19. Adjustable Shunt Regulator

9.2.2.1 Design Requirements

$V_{IN} > V_{OUT}$

V_{OUT} = 2.5 V

Select R_S with Equation 7.

$I_{RMIN} < L_R < I_{RMAX}$

where

- I_{RMAX} = 15 mA (7)

See the electrical characteristics tables in the *Specifications* for minimum operating current for each voltage option and grade.

9.2.2.2 Detail Design Procedure

Select a value of R_S based on the same method shown in *Detailed Design Procedure*.

Set feedback resistors R_1 and R_2 for a resistor divider on the equation shown in *Application Information* that is reproduced here as Equation 8.

$V_{OUT} + V_{REF} \times ((R_2/R_1)+1)$ (8)

So, for a 2.5-V reference, of V_{REF} is 1.24 V, then R_2/R_1 = 1.01. Select R_2= 1.01 kΩ and R_1= 1.0 kΩ.

Copyright © 1999–2016, Texas Instruments Incorporated

Typical Applications (continued)

9.2.3 Bounded Amplifier

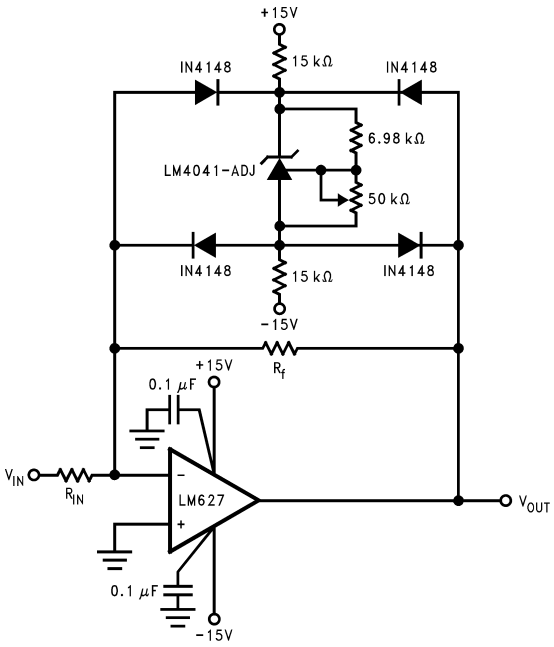

Bounded amplifier reduces saturation-induced delays and can prevent succeeding stage damage. Nominal clamping voltage is $\pm V_O$ (the reverse breakdown voltage of the LM4041-N) +2 diode V_F.

Figure 20. Bounded Amplifier

9.2.3.1 Design Requirements

Design an amplifier with output clamped at ±11.5 V.

9.2.3.2 Detail Design Procedure

With amplifier rails of ±15 V, the output can be bound to ±11.5 V with the LM4041 adjustable set for 10 V and two nominal diode voltage drops of 0.7 V.

$$V_{OUTBOUND} = 2 \times V_{FWD} + V_Z \quad (9)$$

$$V_{OUTBOUND} = 1.4\ V + 10\ V \quad (10)$$

Select R_S = 15 kΩ to keep L_R low. Calculate L_R to confirm R_S selection.

Use Equation 11, but in this case, take the negative supply into account.

$$I_R = (V_{IN} - V_{OUT}) / R \quad (11)$$

$$I_R = (V_{IN+} - V_{IN} - V_{OUT}) / R = (30\ V - 10\ V) / (R_{S1} + R_{S2}) = 20\ V / 30\ k\Omega = 0.667\ mA \quad (12)$$

This is an acceptable value for I_R that does not draw excessive current, but prevents the part from being starved for current.

Copyright © 1999–2016, Texas Instruments Incorporated

Typical Applications (continued)

9.2.3.3 Application Curve

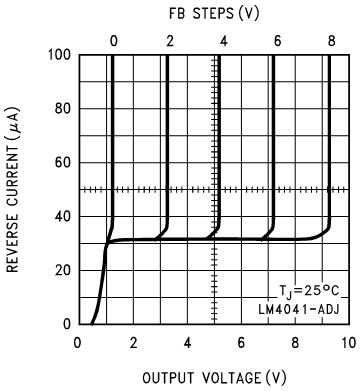

Figure 21. Reverse Characteristics

9.2.4 Voltage Level Detector

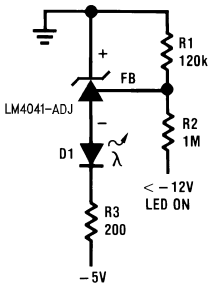

Figure 22. Voltage Level Detector

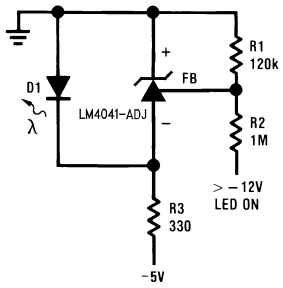

Figure 23. Voltage Level Detector

9.2.4.1 Design Procedure

Turn on an LED when voltage is above or below –12 V.

9.2.4.2 Detail Design Procedure

Use the LM4041 in an open-loop configuration, where the feedback node is tied to a voltage divider driven by the input signal. The voltage divider is set such that when the input signal is at –12 V, the feedback node is –1.24 V. The high gain of the LM4041 will enable it to act like a comparator.

9.2.5 Precision Current Sink and Source

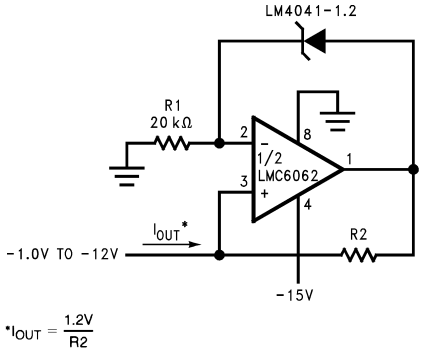

Figure 24. Precision 1-µA to 1-mA Current Sink

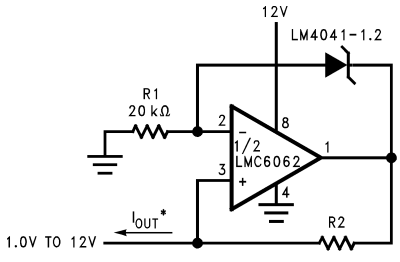

Figure 25. Precision 1-µA to 1-mA Current Sources

9.2.5.1 Design Requirements

Create precision 1-mA current sink and 1-mA current source.

9.2.5.2 Detailed Design Procedure

Set R1 such that the current through the shunt reference, I_R, is greater than I_{RMIN}.

$I_{OUT} = V_{OUT} / R_2$

where

- V_{OUT} is the voltage drop across the shunt reference (13)

In this case, $I_{OUT} = 1.2 / R_2$.

9.2.6 100-mA Current Source

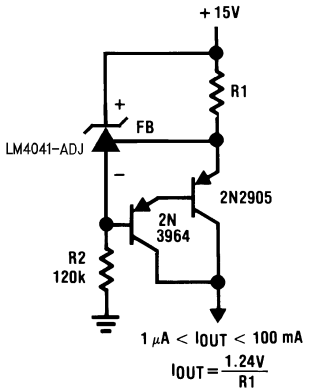

*D1 can be any LED, V_F = 1.5 V to 2.2 V at 3 mA. D1 may act as an indicator. D1 will be on if $I_{THRESHOLD}$ falls below the threshold current, except with I = 0.

Figure 26. Current Source

9.2.6.1 Design Requirements

Create 100-mA current source.

9.2.6.2 Detailed Design Procedure

$I_{OUT} = V_{OUT} / R_1$

where

- V_{OUT} is the voltage drop across the shunt reference. (14)

In this case, $I_{OUT} = 1.24 / R_1$.

Copyright © 1999–2016, Texas Instruments Incorporated

9.2.7 LM4041 in Clamp Circuits

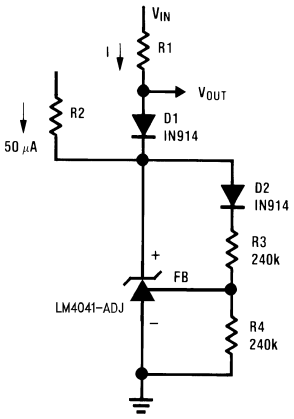

Figure 27. Fast Positive Clamp 2.4 V + V_{D1}

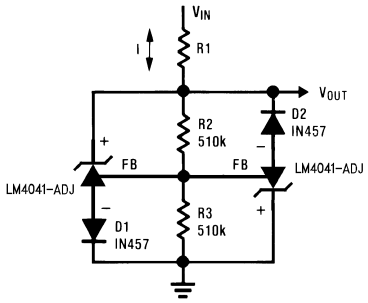

Figure 28. Bidirectional Clamp ±2.4 V

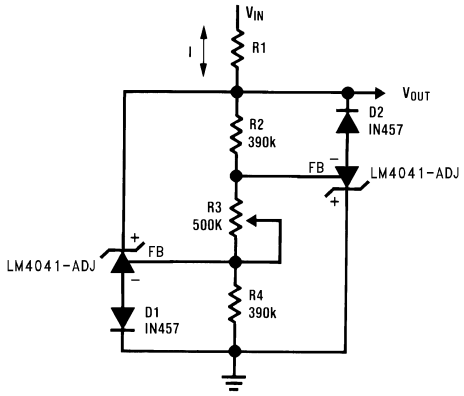

Figure 29. Bidirectional Adjustable Clamp ±18 V to ±2.4 V

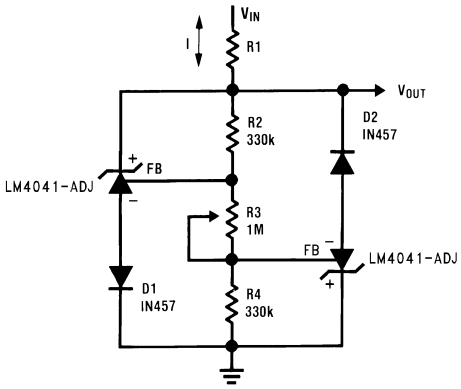

Figure 30. Bidirectional Adjustable Clamp ±2.4 V to ±6 V

9.2.7.1 Design Requirements

Create adjustable clamping circuits using the LM4041.

9.2.7.2 Detailed Design Procedure

Use the LM4041 in open-loop, as a 1.24-V diode that can be on or off based on the voltage at the feedback. See Figure 27 through Figure 30 for examples.

Copyright © 1999–2016, Texas Instruments Incorporated

9.2.8 Floating Current Detector

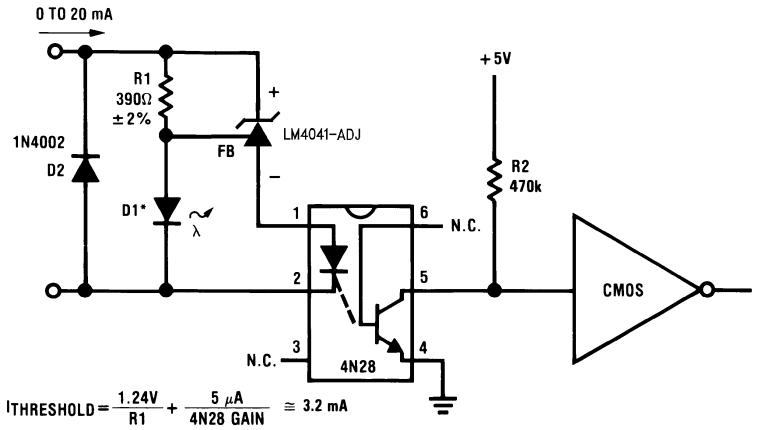

Figure 31. Simple Floating Current Detector

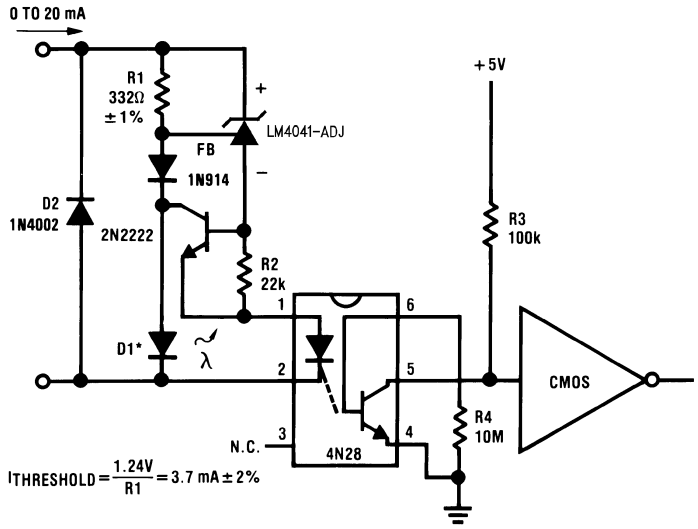

Figure 32. Precision Floating Current Detector

9.2.8.1 Design Requirement

Create a floating current detector using the LM4041.

9.2.8.2 Detailed Design Procedure

Use the LM4041 as a voltage dependent diode, which turns on and off based on the voltage drop across R1. See Figure 31 and Figure 32 for examples.

Copyright © 1999–2016, Texas Instruments Incorporated

10 Power Supply Recommendations

While a bypass capacitor is not required on the input voltage line, TI recommends reducing noise on the input which could affect the output. A 0.1-µF ceramic capacitor or larger is recommended.

11 Layout

11.1 Layout Guidelines

Place external components as close to the device as possible. Place R_S close the cathode, as well as the input bypass capacitor, if used. Keep feedback resistor close the device whenever possible.

11.2 Layout Example

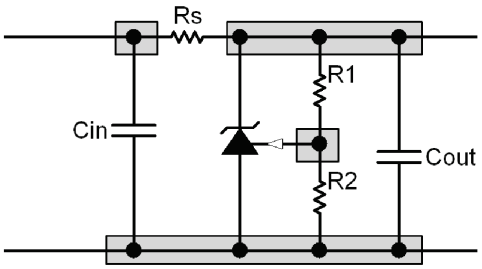

Figure 33. Recommended Layout

12 Device and Documentation Support

12.1 Related Links

The table below lists quick access links. Categories include technical documents, support and community resources, tools and software, and quick access to sample or buy.

Table 1. Related Links

PARTS	PRODUCT FOLDER	SAMPLE & BUY	TECHNICAL DOCUMENTS	TOOLS & SOFTWARE	SUPPORT & COMMUNITY
LM4041-N	Click here	Click here	Click here	Click here	Click here
LM4041-N-Q1	Click here	Click here	Click here	Click here	Click here

12.2 Community Resources

The following links connect to TI community resources. Linked contents are provided "AS IS" by the respective contributors. They do not constitute TI specifications and do not necessarily reflect TI's views; see TI's Terms of Use.

TI E2E™ Online Community ***TI's Engineer-to-Engineer (E2E) Community.*** Created to foster collaboration among engineers. At e2e.ti.com, you can ask questions, share knowledge, explore ideas and help solve problems with fellow engineers.

Design Support ***TI's Design Support*** Quickly find helpful E2E forums along with design support tools and contact information for technical support.

12.3 Trademarks

E2E is a trademark of Texas Instruments.
All other trademarks are the property of their respective owners.

12.4 Electrostatic Discharge Caution



These devices have limited built-in ESD protection. The leads should be shorted together or the device placed in conductive foam during storage or handling to prevent electrostatic damage to the MOS gates.

12.5 Glossary

SLYZ022 — *TI Glossary*.

This glossary lists and explains terms, acronyms, and definitions.

13 Mechanical, Packaging, and Orderable Information

The following pages include mechanical, packaging, and orderable information. This information is the most current data available for the designated devices. This data is subject to change without notice and revision of this document. For browser-based versions of this data sheet, refer to the left-hand navigation.

Copyright © 1999–2016, Texas Instruments Incorporated

PACKAGING INFORMATION

Orderable Device	Status (1)	Package Type	Package Drawing	Pins	Package Qty	Eco Plan (2)	Lead finish/ Ball material (6)	MSL Peak Temp (3)	Op Temp (°C)	Device Marking (4/5)	Samples
LM4041AIM3-1.2	LIFEBUY	SOT-23	DBZ	3	1000	Non-RoHS & Green	Call TI	Level-1-260C-UNLIM	-40 to 85	R1A	
LM4041AIM3-1.2/NOPB	ACTIVE	SOT-23	DBZ	3	3000	RoHS & Green	NIPDAU | SN	Level-1-260C-UNLIM	-40 to 85	R1A	Samples
LM4041AIM3X-1.2/NOPB	ACTIVE	SOT-23	DBZ	3	3000	RoHS & Green	NIPDAU	Level-1-260C-UNLIM	-40 to 85	R1A	Samples
LM4041AIZ-1.2/NOPB	ACTIVE	TO-92	LP	3	1800	RoHS & Green	Call TI	N / A for Pkg Type	-40 to 85	4041A IZ1.2	Samples
LM4041BIM3-1.2	LIFEBUY	SOT-23	DBZ	3	1000	Non-RoHS & Green	Call TI	Level-1-260C-UNLIM	-40 to 85	R1B	
LM4041BIM3-1.2/NOPB	ACTIVE	SOT-23	DBZ	3	3000	RoHS & Green	NIPDAU	Level-1-260C-UNLIM	-40 to 85	R1B	Samples
LM4041BIM3X-1.2/NOPB	ACTIVE	SOT-23	DBZ	3	3000	RoHS & Green	NIPDAU	Level-1-260C-UNLIM	-40 to 85	R1B	Samples
LM4041BIM7-1.2/NOPB	ACTIVE	SC70	DCK	5	3000	RoHS & Green	SN	Level-1-260C-UNLIM	-40 to 85	R1B	Samples
LM4041BIM7X-1.2/NOPB	ACTIVE	SC70	DCK	5	3000	RoHS & Green	SN	Level-1-260C-UNLIM	-40 to 85	R1B	Samples
LM4041BIZ-1.2/NOPB	ACTIVE	TO-92	LP	3	1800	RoHS & Green	Call TI	N / A for Pkg Type	-40 to 85	4041B IZ1.2	Samples
LM4041CEM3-1.2	LIFEBUY	SOT-23	DBZ	3	1000	Non-RoHS & Green	Call TI	Level-1-260C-UNLIM	-40 to 125	R1C	
LM4041CEM3-1.2/NOPB	ACTIVE	SOT-23	DBZ	3	3000	RoHS & Green	NIPDAU	Level-1-260C-UNLIM	-40 to 125	R1C	Samples
LM4041CEM3-ADJ/NOPB	ACTIVE	SOT-23	DBZ	3	3000	RoHS & Green	SN	Level-1-260C-UNLIM	-40 to 125	RAC	Samples
LM4041CEM3X-1.2/NOPB	ACTIVE	SOT-23	DBZ	3	3000	RoHS & Green	NIPDAU	Level-1-260C-UNLIM	-40 to 125	R1C	Samples
LM4041CEM3X-ADJ/NOPB	ACTIVE	SOT-23	DBZ	3	3000	RoHS & Green	SN	Level-1-260C-UNLIM	-40 to 125	RAC	Samples
LM4041CIM3-1.2	LIFEBUY	SOT-23	DBZ	3	1000	Non-RoHS & Green	Call TI	Level-1-260C-UNLIM	-40 to 85	R1C	
LM4041CIM3-1.2/NOPB	ACTIVE	SOT-23	DBZ	3	3000	RoHS & Green	NIPDAU	Level-1-260C-UNLIM	-40 to 85	R1C	Samples
LM4041CIM3-ADJ/NOPB	ACTIVE	SOT-23	DBZ	3	3000	RoHS & Green	SN	Level-1-260C-UNLIM	-40 to 85	RAC	Samples
LM4041CIM3X-1.2/NOPB	ACTIVE	SOT-23	DBZ	3	3000	RoHS & Green	NIPDAU	Level-1-260C-UNLIM	-40 to 85	R1C	Samples

Orderable Device	Status (1)	Package Type	Package Drawing	Pins	Package Qty	Eco Plan (2)	Lead finish/ Ball material (6)	MSL Peak Temp (3)	Op Temp (°C)	Device Marking (4/5)	Samples
LM4041CIM3X-ADJ/NOPB	ACTIVE	SOT-23	DBZ	3	3000	RoHS & Green	SN	Level-1-260C-UNLIM	-40 to 85	RAC	Samples
LM4041CIM7-1.2/NOPB	ACTIVE	SC70	DCK	5	3000	RoHS & Green	SN	Level-1-260C-UNLIM	-40 to 85	R1C	Samples
LM4041CIM7-ADJ/NOPB	ACTIVE	SC70	DCK	5	3000	RoHS & Green	SN	Level-1-260C-UNLIM	-40 to 85	RAC	Samples
LM4041CIM7X-1.2/NOPB	ACTIVE	SC70	DCK	5	3000	RoHS & Green	SN	Level-1-260C-UNLIM	-40 to 85	R1C	Samples
LM4041CIM7X-ADJ/NOPB	ACTIVE	SC70	DCK	5	3000	RoHS & Green	SN	Level-1-260C-UNLIM	-40 to 85	RAC	Samples
LM4041CIZ-1.2/NOPB	ACTIVE	TO-92	LP	3	1800	RoHS & Green	Call TI	N / A for Pkg Type	-40 to 85	4041C IZ1.2	Samples
LM4041CIZ-ADJ/NOPB	LIFEBUY	TO-92	LP	3	1800	RoHS & Green	Call TI	N / A for Pkg Type	-40 to 85	4041C IZADJ	
LM4041DEM3-1.2/NOPB	ACTIVE	SOT-23	DBZ	3	3000	RoHS & Green	NIPDAU	Level-1-260C-UNLIM	-40 to 125	R1D	Samples
LM4041DEM3-ADJ/NOPB	ACTIVE	SOT-23	DBZ	3	3000	RoHS & Green	SN	Level-1-260C-UNLIM	-40 to 125	RAD	Samples
LM4041DEM3X-1.2/NOPB	ACTIVE	SOT-23	DBZ	3	3000	RoHS & Green	NIPDAU	Level-1-260C-UNLIM	-40 to 125	R1D	Samples
LM4041DEM3X-ADJ/NOPB	ACTIVE	SOT-23	DBZ	3	3000	RoHS & Green	SN	Level-1-260C-UNLIM	-40 to 125	RAD	Samples
LM4041DIM3-1.2	LIFEBUY	SOT-23	DBZ	3	1000	Non-RoHS & Green	Call TI	Level-1-260C-UNLIM	-40 to 85	R1D	
LM4041DIM3-1.2/NOPB	ACTIVE	SOT-23	DBZ	3	3000	RoHS & Green	NIPDAU | SN	Level-1-260C-UNLIM	-40 to 85	R1D	Samples
LM4041DIM3-ADJ/NOPB	ACTIVE	SOT-23	DBZ	3	3000	RoHS & Green	SN	Level-1-260C-UNLIM	-40 to 85	RAD	Samples
LM4041DIM3X-1.2/NOPB	ACTIVE	SOT-23	DBZ	3	3000	RoHS & Green	NIPDAU	Level-1-260C-UNLIM	-40 to 85	R1D	Samples
LM4041DIM3X-ADJ/NOPB	ACTIVE	SOT-23	DBZ	3	3000	RoHS & Green	SN	Level-1-260C-UNLIM	-40 to 85	RAD	Samples
LM4041DIM7-1.2/NOPB	ACTIVE	SC70	DCK	5	3000	RoHS & Green	SN	Level-1-260C-UNLIM	-40 to 85	R1D	Samples
LM4041DIM7-ADJ/NOPB	ACTIVE	SC70	DCK	5	3000	RoHS & Green	SN	Level-1-260C-UNLIM	-40 to 85	RAD	Samples
LM4041DIM7X-1.2/NOPB	ACTIVE	SC70	DCK	5	3000	RoHS & Green	SN	Level-1-260C-UNLIM	-40 to 85	R1D	Samples
LM4041DIM7X-ADJ/NOPB	ACTIVE	SC70	DCK	5	3000	RoHS & Green	SN	Level-1-260C-UNLIM	-40 to 85	RAD	Samples

Orderable Device	Status (1)	Package Type	Package Drawing	Pins	Package Qty	Eco Plan (2)	Lead finish/ Ball material (6)	MSL Peak Temp (3)	Op Temp (°C)	Device Marking (4/5)	Samples
LM4041DIZ-1.2/NOPB	ACTIVE	TO-92	LP	3	1800	RoHS & Green	Call TI	N / A for Pkg Type	-40 to 85	4041D IZ1.2	Samples
LM4041DIZ-ADJ/LFT1	LIFEBUY	TO-92	LP	3	2000	RoHS & Green	SN	N / A for Pkg Type		4041D IZADJ	
LM4041DIZ-ADJ/NOPB	LIFEBUY	TO-92	LP	3	1800	RoHS & Green	Call TI	N / A for Pkg Type	-40 to 85	4041D IZADJ	
LM4041EEM3-1.2/NOPB	ACTIVE	SOT-23	DBZ	3	1000	RoHS & Green	NIPDAU	Level-1-260C-UNLIM	-40 to 125	R1E	Samples
LM4041EEM3X-1.2/NOPB	ACTIVE	SOT-23	DBZ	3	3000	RoHS & Green	NIPDAU	Level-1-260C-UNLIM	-40 to 125	R1E	Samples
LM4041EIM3-1.2	LIFEBUY	SOT-23	DBZ	3	1000	Non-RoHS & Green	Call TI	Level-1-260C-UNLIM	-40 to 85	R1E	
LM4041EIM3-1.2/NOPB	ACTIVE	SOT-23	DBZ	3	1000	RoHS & Green	NIPDAU	Level-1-260C-UNLIM	-40 to 85	R1E	Samples
LM4041EIM3X-1.2/NOPB	ACTIVE	SOT-23	DBZ	3	3000	RoHS & Green	NIPDAU	Level-1-260C-UNLIM	-40 to 85	R1E	Samples
LM4041EIM7-1.2/NOPB	ACTIVE	SC70	DCK	5	1000	RoHS & Green	SN	Level-1-260C-UNLIM	-40 to 85	R1E	Samples
LM4041EIM7X-1.2/NOPB	ACTIVE	SC70	DCK	5	3000	RoHS & Green	SN	Level-1-260C-UNLIM	-40 to 85	R1E	Samples
LM4041QAIM3-1.2/NO	ACTIVE	SOT-23	DBZ	3	3000	RoHS & Green	SN	Level-1-260C-UNLIM	-40 to 85	RQA	Samples
LM4041QBIM3-1.2/NO	ACTIVE	SOT-23	DBZ	3	3000	RoHS & Green	SN	Level-1-260C-UNLIM	-40 to 85	RQB	Samples
LM4041QCEM3-1.2NO	ACTIVE	SOT-23	DBZ	3	3000	RoHS & Green	SN	Level-1-260C-UNLIM	-40 to 125	RQC	Samples
LM4041QCEM3-ADJ/NO	ACTIVE	SOT-23	DBZ	3	3000	RoHS & Green	SN	Level-1-260C-UNLIM	-40 to 125	RZC	Samples
LM4041QCEM3X-1.2NO	ACTIVE	SOT-23	DBZ	3	3000	RoHS & Green	SN	Level-1-260C-UNLIM	-40 to 125	RQC	Samples
LM4041QCIM3-1.2/NO	ACTIVE	SOT-23	DBZ	3	3000	RoHS & Green	SN	Level-1-260C-UNLIM	-40 to 85	RQC	Samples
LM4041QCIM3-ADJ/NO	ACTIVE	SOT-23	DBZ	3	3000	RoHS & Green	SN	Level-1-260C-UNLIM	-40 to 85	RZC	Samples
LM4041QDEM3-1.2/NO	ACTIVE	SOT-23	DBZ	3	3000	RoHS & Green	SN	Level-1-260C-UNLIM	-40 to 125	RQD	Samples
LM4041QDEM3-ADJ/NO	ACTIVE	SOT-23	DBZ	3	3000	RoHS & Green	SN	Level-1-260C-UNLIM	-40 to 125	RZD	Samples
LM4041QDIM3-1.2/NO	ACTIVE	SOT-23	DBZ	3	3000	RoHS & Green	SN	Level-1-260C-UNLIM	-40 to 85	RQD	Samples

Orderable Device	Status (1)	Package Type	Package Drawing	Pins	Package Qty	Eco Plan (2)	Lead finish/ Ball material (6)	MSL Peak Temp (3)	Op Temp (°C)	Device Marking (4/5)	Samples
LM4041QDIM3-ADJ/NO	ACTIVE	SOT-23	DBZ	3	3000	RoHS & Green	SN	Level-1-260C-UNLIM	-40 to 85	RZD	Samples
LM4041QEEM3-1.2/NO	ACTIVE	SOT-23	DBZ	3	3000	RoHS & Green	SN	Level-1-260C-UNLIM	-40 to 125	RQE	Samples
LM4041QEEM3X-1.2NO	ACTIVE	SOT-23	DBZ	3	3000	RoHS & Green	SN	Level-1-260C-UNLIM	-40 to 125	RQE	Samples
LM4041QEIM3-1.2/NO	ACTIVE	SOT-23	DBZ	3	1000	RoHS & Green	SN	Level-1-260C-UNLIM	-40 to 85	RQE	Samples

(1) The marketing status values are defined as follows:
ACTIVE: Product device recommended for new designs.
LIFEBUY: TI has announced that the device will be discontinued, and a lifetime-buy period is in effect.
NRND: Not recommended for new designs. Device is in production to support existing customers, but TI does not recommend using this part in a new design.
PREVIEW: Device has been announced but is not in production. Samples may or may not be available.
OBSOLETE: TI has discontinued the production of the device.

(2) **RoHS:** TI defines "RoHS" to mean semiconductor products that are compliant with the current EU RoHS requirements for all 10 RoHS substances, including the requirement that RoHS substance do not exceed 0.1% by weight in homogeneous materials. Where designed to be soldered at high temperatures, "RoHS" products are suitable for use in specified lead-free processes. TI may reference these types of products as "Pb-Free".
RoHS Exempt: TI defines "RoHS Exempt" to mean products that contain lead but are compliant with EU RoHS pursuant to a specific EU RoHS exemption.
Green: TI defines "Green" to mean the content of Chlorine (Cl) and Bromine (Br) based flame retardants meet JS709B low halogen requirements of <=1000ppm threshold. Antimony trioxide based flame retardants must also meet the <=1000ppm threshold requirement.

(3) MSL, Peak Temp. - The Moisture Sensitivity Level rating according to the JEDEC industry standard classifications, and peak solder temperature.

(4) There may be additional marking, which relates to the logo, the lot trace code information, or the environmental category on the device.

(5) Multiple Device Markings will be inside parentheses. Only one Device Marking contained in parentheses and separated by a "~" will appear on a device. If a line is indented then it is a continuation of the previous line and the two combined represent the entire Device Marking for that device.

(6) Lead finish/Ball material - Orderable Devices may have multiple material finish options. Finish options are separated by a vertical ruled line. Lead finish/Ball material values may wrap to two lines if the finish value exceeds the maximum column width.

Important Information and Disclaimer: The information provided on this page represents TI's knowledge and belief as of the date that it is provided. TI bases its knowledge and belief on information provided by third parties, and makes no representation or warranty as to the accuracy of such information. Efforts are underway to better integrate information from third parties. TI has taken and continues to take reasonable steps to provide representative and accurate information but may not have conducted destructive testing or chemical analysis on incoming materials and chemicals. TI and TI suppliers consider certain information to be proprietary, and thus CAS numbers and other limited information may not be available for release.

In no event shall TI's liability arising out of such information exceed the total purchase price of the TI part(s) at issue in this document sold by TI to Customer on an annual basis.

OTHER QUALIFIED VERSIONS OF LM4041-N, LM4041-N-Q1 :

- Catalog : LM4041-N
- Automotive : LM4041-N-Q1

NOTE: Qualified Version Definitions:

- Catalog - TI's standard catalog product
- Automotive - Q100 devices qualified for high-reliability automotive applications targeting zero defects

TAPE AND REEL INFORMATION

REEL DIMENSIONS

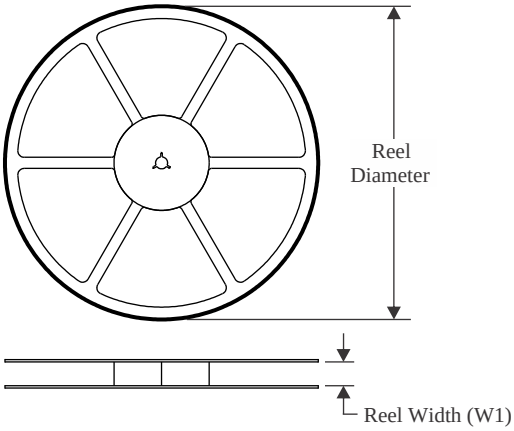

TAPE DIMENSIONS

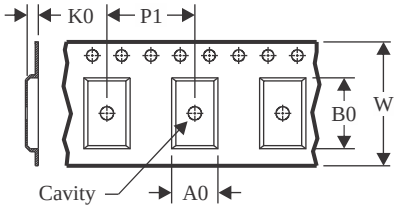

A0	Dimension designed to accommodate the component width
B0	Dimension designed to accommodate the component length
K0	Dimension designed to accommodate the component thickness
W	Overall width of the carrier tape
P1	Pitch between successive cavity centers

QUADRANT ASSIGNMENTS FOR PIN 1 ORIENTATION IN TAPE

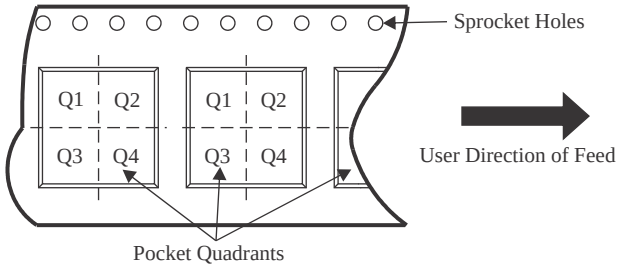

*All dimensions are nominal

Device	Package Type	Package Drawing	Pins	SPQ	Reel Diameter (mm)	Reel Width W1 (mm)	A0 (mm)	B0 (mm)	K0 (mm)	P1 (mm)	W (mm)	Pin1 Quadrant
LM4041AIM3-1.2	SOT-23	DBZ	3	1000	178.0	8.4	3.3	2.9	1.22	4.0	8.0	Q3
LM4041AIM3-1.2/NOPB	SOT-23	DBZ	3	3000	180.0	8.4	2.9	3.35	1.35	4.0	8.0	Q3
LM4041AIM3X-1.2/NOPB	SOT-23	DBZ	3	3000	180.0	8.4	2.9	3.35	1.35	4.0	8.0	Q3
LM4041BIM3-1.2	SOT-23	DBZ	3	1000	178.0	8.4	3.3	2.9	1.22	4.0	8.0	Q3
LM4041BIM3-1.2/NOPB	SOT-23	DBZ	3	3000	180.0	8.4	2.9	3.35	1.35	4.0	8.0	Q3
LM4041BIM3X-1.2/NOPB	SOT-23	DBZ	3	3000	180.0	8.4	2.9	3.35	1.35	4.0	8.0	Q3
LM4041BIM7-1.2/NOPB	SC70	DCK	5	3000	178.0	8.4	2.25	2.45	1.2	4.0	8.0	Q3
LM4041BIM7X-1.2/NOPB	SC70	DCK	5	3000	178.0	8.4	2.25	2.45	1.2	4.0	8.0	Q3
LM4041CEM3-1.2	SOT-23	DBZ	3	1000	178.0	8.4	3.3	2.9	1.22	4.0	8.0	Q3
LM4041CEM3-1.2/NOPB	SOT-23	DBZ	3	3000	180.0	8.4	2.9	3.35	1.35	4.0	8.0	Q3
LM4041CEM3-ADJ/NOPB	SOT-23	DBZ	3	3000	178.0	8.4	3.3	2.9	1.22	4.0	8.0	Q3
LM4041CEM3X-1.2/NOPB	SOT-23	DBZ	3	3000	180.0	8.4	2.9	3.35	1.35	4.0	8.0	Q3
LM4041CEM3X-ADJ/NOPB	SOT-23	DBZ	3	3000	178.0	8.4	3.3	2.9	1.22	4.0	8.0	Q3
LM4041CIM3-1.2	SOT-23	DBZ	3	1000	178.0	8.4	3.3	2.9	1.22	4.0	8.0	Q3
LM4041CIM3-1.2/NOPB	SOT-23	DBZ	3	3000	180.0	8.4	2.9	3.35	1.35	4.0	8.0	Q3

Device	Package Type	Package Drawing	Pins	SPQ	Reel Diameter (mm)	Reel Width W1 (mm)	A0 (mm)	B0 (mm)	K0 (mm)	P1 (mm)	W (mm)	Pin1 Quadrant
LM4041CIM3-ADJ/NOPB	SOT-23	DBZ	3	3000	178.0	8.4	3.3	2.9	1.22	4.0	8.0	Q3
LM4041CIM3X-1.2/NOPB	SOT-23	DBZ	3	3000	180.0	8.4	2.9	3.35	1.35	4.0	8.0	Q3
LM4041CIM3X-ADJ/NOPB	SOT-23	DBZ	3	3000	178.0	8.4	3.3	2.9	1.22	4.0	8.0	Q3
LM4041CIM7-1.2/NOPB	SC70	DCK	5	3000	178.0	8.4	2.25	2.45	1.2	4.0	8.0	Q3
LM4041CIM7-ADJ/NOPB	SC70	DCK	5	3000	178.0	8.4	2.25	2.45	1.2	4.0	8.0	Q3
LM4041CIM7X-1.2/NOPB	SC70	DCK	5	3000	178.0	8.4	2.25	2.45	1.2	4.0	8.0	Q3
LM4041CIM7X-ADJ/NOPB	SC70	DCK	5	3000	178.0	8.4	2.25	2.45	1.2	4.0	8.0	Q3
LM4041DEM3-1.2/NOPB	SOT-23	DBZ	3	3000	180.0	8.4	2.9	3.35	1.35	4.0	8.0	Q3
LM4041DEM3-ADJ/NOPB	SOT-23	DBZ	3	3000	178.0	8.4	3.3	2.9	1.22	4.0	8.0	Q3
LM4041DEM3X-1.2/NOPB	SOT-23	DBZ	3	3000	180.0	8.4	2.9	3.35	1.35	4.0	8.0	Q3
LM4041DEM3X-ADJ/NOPB	SOT-23	DBZ	3	3000	178.0	8.4	3.3	2.9	1.22	4.0	8.0	Q3
LM4041DIM3-1.2	SOT-23	DBZ	3	1000	178.0	8.4	3.3	2.9	1.22	4.0	8.0	Q3
LM4041DIM3-1.2/NOPB	SOT-23	DBZ	3	3000	180.0	8.4	2.9	3.35	1.35	4.0	8.0	Q3
LM4041DIM3-ADJ/NOPB	SOT-23	DBZ	3	3000	178.0	8.4	3.3	2.9	1.22	4.0	8.0	Q3
LM4041DIM3X-1.2/NOPB	SOT-23	DBZ	3	3000	180.0	8.4	2.9	3.35	1.35	4.0	8.0	Q3
LM4041DIM3X-ADJ/NOPB	SOT-23	DBZ	3	3000	178.0	8.4	3.3	2.9	1.22	4.0	8.0	Q3
LM4041DIM7-1.2/NOPB	SC70	DCK	5	3000	178.0	8.4	2.25	2.45	1.2	4.0	8.0	Q3
LM4041DIM7-ADJ/NOPB	SC70	DCK	5	3000	178.0	8.4	2.25	2.45	1.2	4.0	8.0	Q3
LM4041DIM7X-1.2/NOPB	SC70	DCK	5	3000	178.0	8.4	2.25	2.45	1.2	4.0	8.0	Q3
LM4041DIM7X-ADJ/NOPB	SC70	DCK	5	3000	178.0	8.4	2.25	2.45	1.2	4.0	8.0	Q3
LM4041EEM3-1.2/NOPB	SOT-23	DBZ	3	1000	180.0	8.4	2.9	3.35	1.35	4.0	8.0	Q3
LM4041EEM3X-1.2/NOPB	SOT-23	DBZ	3	3000	180.0	8.4	2.9	3.35	1.35	4.0	8.0	Q3
LM4041EIM3-1.2	SOT-23	DBZ	3	1000	178.0	8.4	3.3	2.9	1.22	4.0	8.0	Q3
LM4041EIM3-1.2/NOPB	SOT-23	DBZ	3	1000	180.0	8.4	2.9	3.35	1.35	4.0	8.0	Q3
LM4041EIM3X-1.2/NOPB	SOT-23	DBZ	3	3000	180.0	8.4	2.9	3.35	1.35	4.0	8.0	Q3
LM4041EIM7-1.2/NOPB	SC70	DCK	5	1000	178.0	8.4	2.25	2.45	1.2	4.0	8.0	Q3
LM4041EIM7X-1.2/NOPB	SC70	DCK	5	3000	178.0	8.4	2.25	2.45	1.2	4.0	8.0	Q3
LM4041QAIM3-1.2/NO	SOT-23	DBZ	3	3000	178.0	8.4	3.3	2.9	1.22	4.0	8.0	Q3
LM4041QBIM3-1.2/NO	SOT-23	DBZ	3	3000	178.0	8.4	3.3	2.9	1.22	4.0	8.0	Q3
LM4041QCEM3-1.2NO	SOT-23	DBZ	3	3000	178.0	8.4	3.3	2.9	1.22	4.0	8.0	Q3
LM4041QCEM3-ADJ/NO	SOT-23	DBZ	3	3000	178.0	8.4	3.3	2.9	1.22	4.0	8.0	Q3
LM4041QCEM3X-1.2NO	SOT-23	DBZ	3	3000	178.0	8.4	3.3	2.9	1.22	4.0	8.0	Q3
LM4041QCIM3-1.2/NO	SOT-23	DBZ	3	3000	178.0	8.4	3.3	2.9	1.22	4.0	8.0	Q3
LM4041QCIM3-ADJ/NO	SOT-23	DBZ	3	3000	178.0	8.4	3.3	2.9	1.22	4.0	8.0	Q3
LM4041QDEM3-1.2/NO	SOT-23	DBZ	3	3000	178.0	8.4	3.3	2.9	1.22	4.0	8.0	Q3
LM4041QDEM3-ADJ/NO	SOT-23	DBZ	3	3000	178.0	8.4	3.3	2.9	1.22	4.0	8.0	Q3
LM4041QDIM3-1.2/NO	SOT-23	DBZ	3	3000	178.0	8.4	3.3	2.9	1.22	4.0	8.0	Q3
LM4041QDIM3-ADJ/NO	SOT-23	DBZ	3	3000	178.0	8.4	3.3	2.9	1.22	4.0	8.0	Q3

Device	Package Type	Package Drawing	Pins	SPQ	Reel Diameter (mm)	Reel Width W1 (mm)	A0 (mm)	B0 (mm)	K0 (mm)	P1 (mm)	W (mm)	Pin1 Quadrant
LM4041QEEM3-1.2/NO	SOT-23	DBZ	3	3000	178.0	8.4	3.3	2.9	1.22	4.0	8.0	Q3
LM4041QEEM3X-1.2NO	SOT-23	DBZ	3	3000	178.0	8.4	3.3	2.9	1.22	4.0	8.0	Q3
LM4041QEIM3-1.2/NO	SOT-23	DBZ	3	1000	178.0	8.4	3.3	2.9	1.22	4.0	8.0	Q3

TAPE AND REEL BOX DIMENSIONS

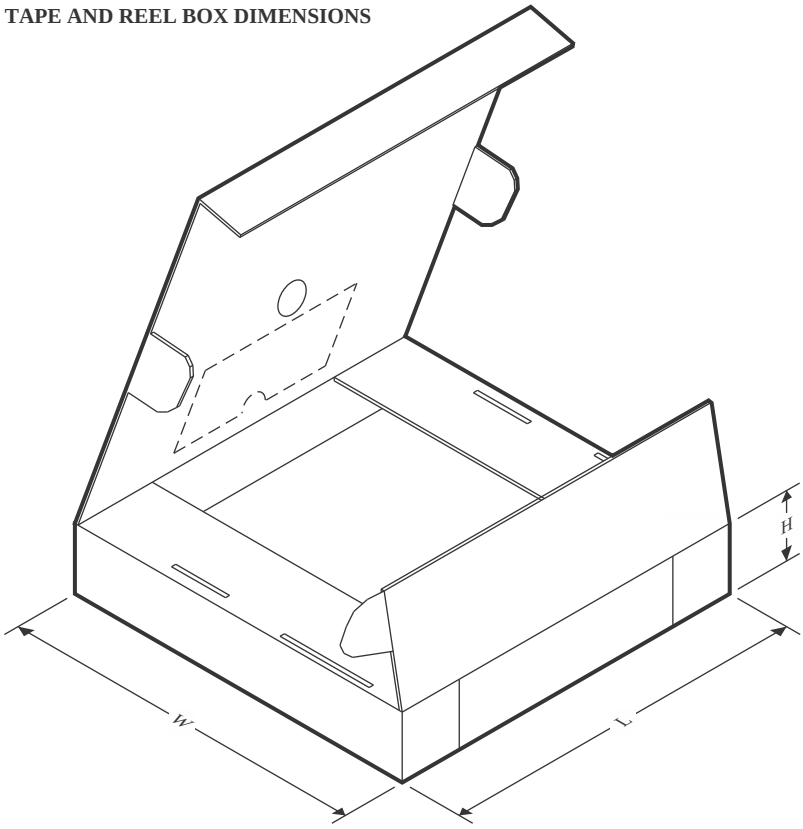

*All dimensions are nominal

Device	Package Type	Package Drawing	Pins	SPQ	Length (mm)	Width (mm)	Height (mm)
LM4041AIM3-1.2	SOT-23	DBZ	3	1000	208.0	191.0	35.0
LM4041AIM3-1.2/NOPB	SOT-23	DBZ	3	3000	210.0	185.0	35.0
LM4041AIM3X-1.2/NOPB	SOT-23	DBZ	3	3000	210.0	185.0	35.0
LM4041BIM3-1.2	SOT-23	DBZ	3	1000	208.0	191.0	35.0
LM4041BIM3-1.2/NOPB	SOT-23	DBZ	3	3000	210.0	185.0	35.0
LM4041BIM3X-1.2/NOPB	SOT-23	DBZ	3	3000	210.0	185.0	35.0
LM4041BIM7-1.2/NOPB	SC70	DCK	5	3000	208.0	191.0	35.0
LM4041BIM7X-1.2/NOPB	SC70	DCK	5	3000	208.0	191.0	35.0
LM4041CEM3-1.2	SOT-23	DBZ	3	1000	208.0	191.0	35.0
LM4041CEM3-1.2/NOPB	SOT-23	DBZ	3	3000	210.0	185.0	35.0
LM4041CEM3-ADJ/NOPB	SOT-23	DBZ	3	3000	208.0	191.0	35.0
LM4041CEM3X-1.2/NOPB	SOT-23	DBZ	3	3000	210.0	185.0	35.0
LM4041CEM3X-ADJ/NOPB	SOT-23	DBZ	3	3000	208.0	191.0	35.0
LM4041CIM3-1.2	SOT-23	DBZ	3	1000	208.0	191.0	35.0
LM4041CIM3-1.2/NOPB	SOT-23	DBZ	3	3000	210.0	185.0	35.0
LM4041CIM3-ADJ/NOPB	SOT-23	DBZ	3	3000	208.0	191.0	35.0
LM4041CIM3X-1.2/NOPB	SOT-23	DBZ	3	3000	210.0	185.0	35.0

Device	Package Type	Package Drawing	Pins	SPQ	Length (mm)	Width (mm)	Height (mm)
LM4041CIM3X-ADJ/NOPB	SOT-23	DBZ	3	3000	208.0	191.0	35.0
LM4041CIM7-1.2/NOPB	SC70	DCK	5	3000	208.0	191.0	35.0
LM4041CIM7-ADJ/NOPB	SC70	DCK	5	3000	208.0	191.0	35.0
LM4041CIM7X-1.2/NOPB	SC70	DCK	5	3000	208.0	191.0	35.0
LM4041CIM7X-ADJ/NOPB	SC70	DCK	5	3000	208.0	191.0	35.0
LM4041DEM3-1.2/NOPB	SOT-23	DBZ	3	3000	210.0	185.0	35.0
LM4041DEM3-ADJ/NOPB	SOT-23	DBZ	3	3000	208.0	191.0	35.0
LM4041DEM3X-1.2/NOPB	SOT-23	DBZ	3	3000	210.0	185.0	35.0
LM4041DEM3X-ADJ/NOPB	SOT-23	DBZ	3	3000	208.0	191.0	35.0
LM4041DIM3-1.2	SOT-23	DBZ	3	1000	208.0	191.0	35.0
LM4041DIM3-1.2/NOPB	SOT-23	DBZ	3	3000	210.0	185.0	35.0
LM4041DIM3-ADJ/NOPB	SOT-23	DBZ	3	3000	208.0	191.0	35.0
LM4041DIM3X-1.2/NOPB	SOT-23	DBZ	3	3000	210.0	185.0	35.0
LM4041DIM3X-ADJ/NOPB	SOT-23	DBZ	3	3000	208.0	191.0	35.0
LM4041DIM7-1.2/NOPB	SC70	DCK	5	3000	208.0	191.0	35.0
LM4041DIM7-ADJ/NOPB	SC70	DCK	5	3000	208.0	191.0	35.0
LM4041DIM7X-1.2/NOPB	SC70	DCK	5	3000	208.0	191.0	35.0
LM4041DIM7X-ADJ/NOPB	SC70	DCK	5	3000	208.0	191.0	35.0
LM4041EEM3-1.2/NOPB	SOT-23	DBZ	3	1000	210.0	185.0	35.0
LM4041EEM3X-1.2/NOPB	SOT-23	DBZ	3	3000	210.0	185.0	35.0
LM4041EIM3-1.2	SOT-23	DBZ	3	1000	208.0	191.0	35.0
LM4041EIM3-1.2/NOPB	SOT-23	DBZ	3	1000	210.0	185.0	35.0
LM4041EIM3X-1.2/NOPB	SOT-23	DBZ	3	3000	210.0	185.0	35.0
LM4041EIM7-1.2/NOPB	SC70	DCK	5	1000	208.0	191.0	35.0
LM4041EIM7X-1.2/NOPB	SC70	DCK	5	3000	208.0	191.0	35.0
LM4041QAIM3-1.2/NO	SOT-23	DBZ	3	3000	208.0	191.0	35.0
LM4041QBIM3-1.2/NO	SOT-23	DBZ	3	3000	208.0	191.0	35.0
LM4041QCEM3-1.2NO	SOT-23	DBZ	3	3000	208.0	191.0	35.0
LM4041QCEM3-ADJ/NO	SOT-23	DBZ	3	3000	208.0	191.0	35.0
LM4041QCEM3X-1.2NO	SOT-23	DBZ	3	3000	208.0	191.0	35.0
LM4041QCIM3-1.2/NO	SOT-23	DBZ	3	3000	208.0	191.0	35.0
LM4041QCIM3-ADJ/NO	SOT-23	DBZ	3	3000	208.0	191.0	35.0
LM4041QDEM3-1.2/NO	SOT-23	DBZ	3	3000	208.0	191.0	35.0
LM4041QDEM3-ADJ/NO	SOT-23	DBZ	3	3000	208.0	191.0	35.0
LM4041QDIM3-1.2/NO	SOT-23	DBZ	3	3000	208.0	191.0	35.0
LM4041QDIM3-ADJ/NO	SOT-23	DBZ	3	3000	208.0	191.0	35.0
LM4041QEEM3-1.2/NO	SOT-23	DBZ	3	3000	208.0	191.0	35.0
LM4041QEEM3X-1.2NO	SOT-23	DBZ	3	3000	208.0	191.0	35.0
LM4041QEIM3-1.2/NO	SOT-23	DBZ	3	1000	208.0	191.0	35.0

PACKAGE OUTLINE

DCK0005A

SOT - 1.1 max height

SMALL OUTLINE TRANSISTOR

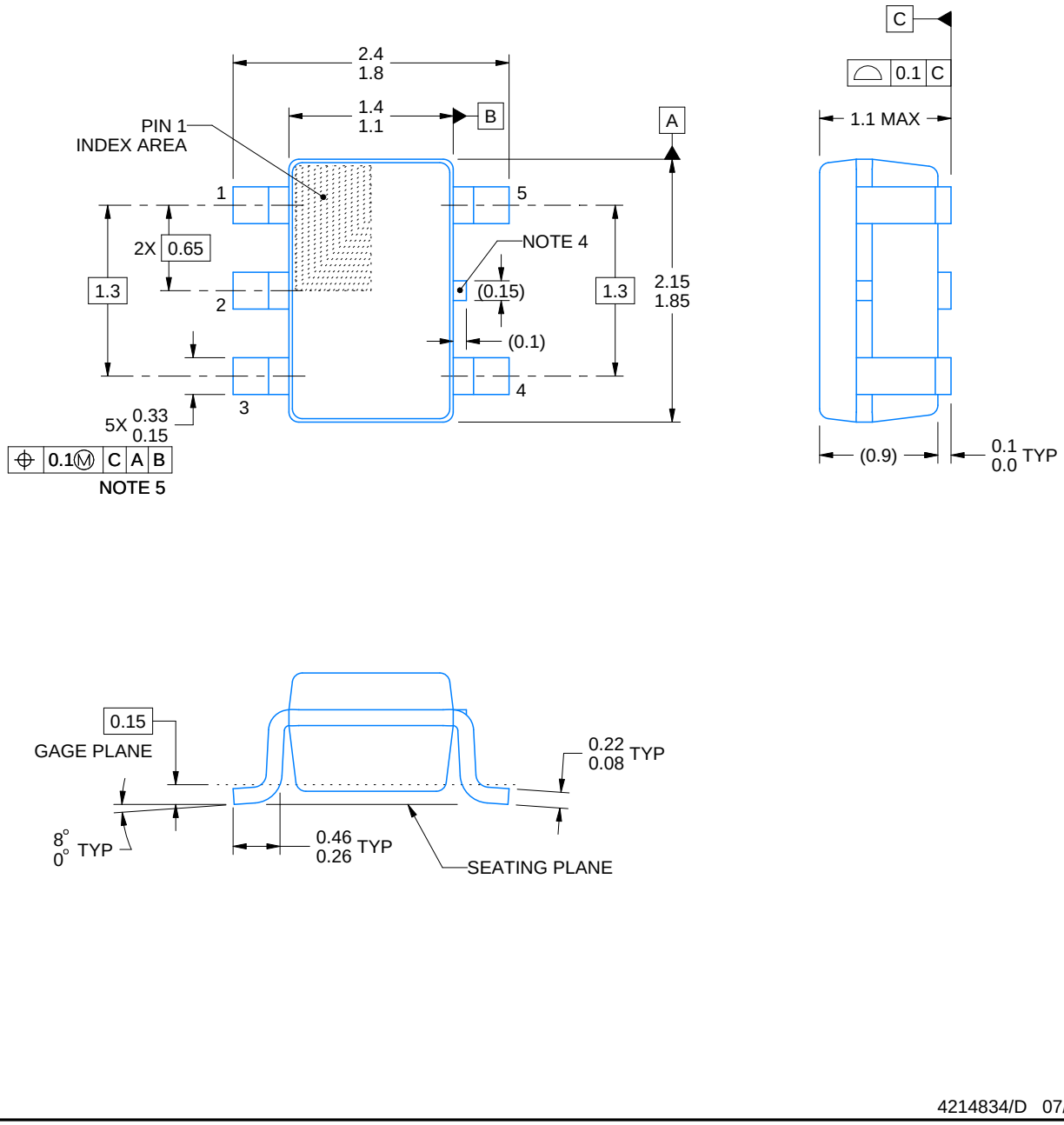

4214834/D 07/2023

NOTES:

1. All linear dimensions are in millimeters. Any dimensions in parenthesis are for reference only. Dimensioning and tolerancing per ASME Y14.5M.
2. This drawing is subject to change without notice.
3. Refernce JEDEC MO-203.
4. Support pin may differ or may not be present.
5. Lead width does not comply with JEDEC.

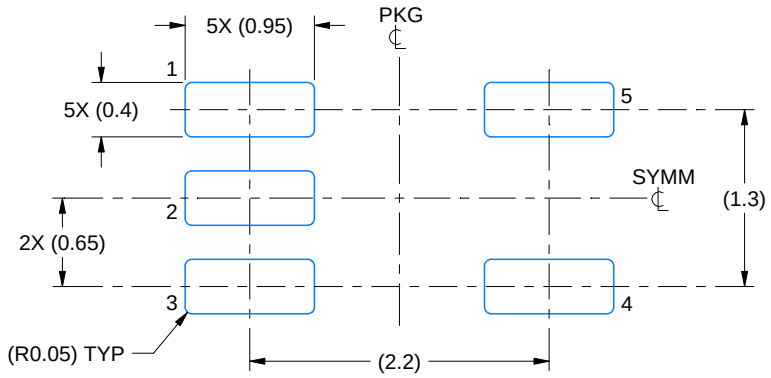

LAND PATTERN EXAMPLE
EXPOSED METAL SHOWN
SCALE:18X

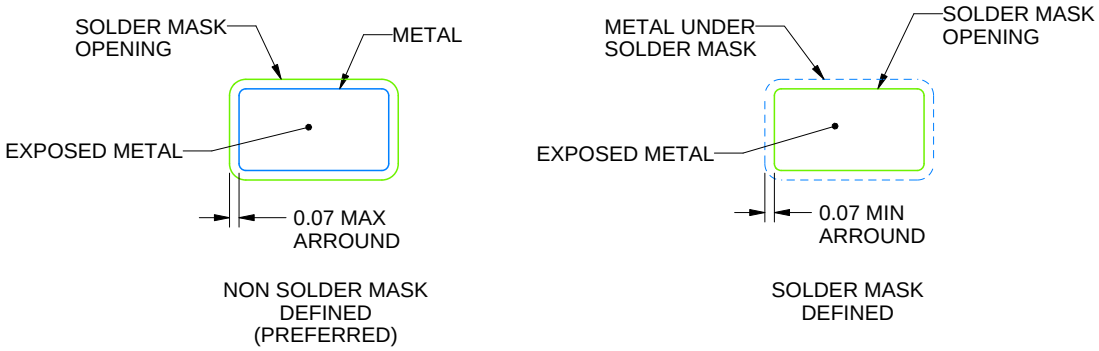

SOLDER MASK DETAILS

4214834/D 07/2023

NOTES: (continued)

6. Publication IPC-7351 may have alternate designs.
7. Solder mask tolerances between and around signal pads can vary based on board fabrication site.

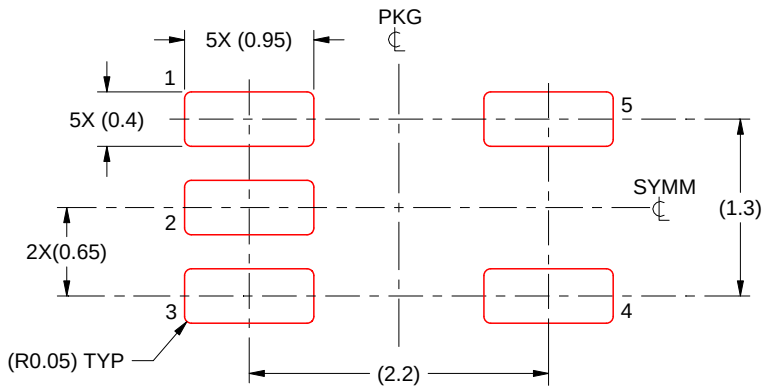

SOLDER PASTE EXAMPLE
BASED ON 0.125 THICK STENCIL
SCALE:18X

4214834/D 07/2023

NOTES: (continued)

8. Laser cutting apertures with trapezoidal walls and rounded corners may offer better paste release. IPC-7525 may have alternate design recommendations.
9. Board assembly site may have different recommendations for stencil design.

GENERIC PACKAGE VIEW

LP 3 TO-92 - 5.34 mm max height

TRANSISTOR OUTLINE



Images above are just a representation of the package family, actual package may vary.
Refer to the product data sheet for package details.

LP0003A





PACKAGE OUTLINE

TO-92 - 5.34 mm max height

TO-92

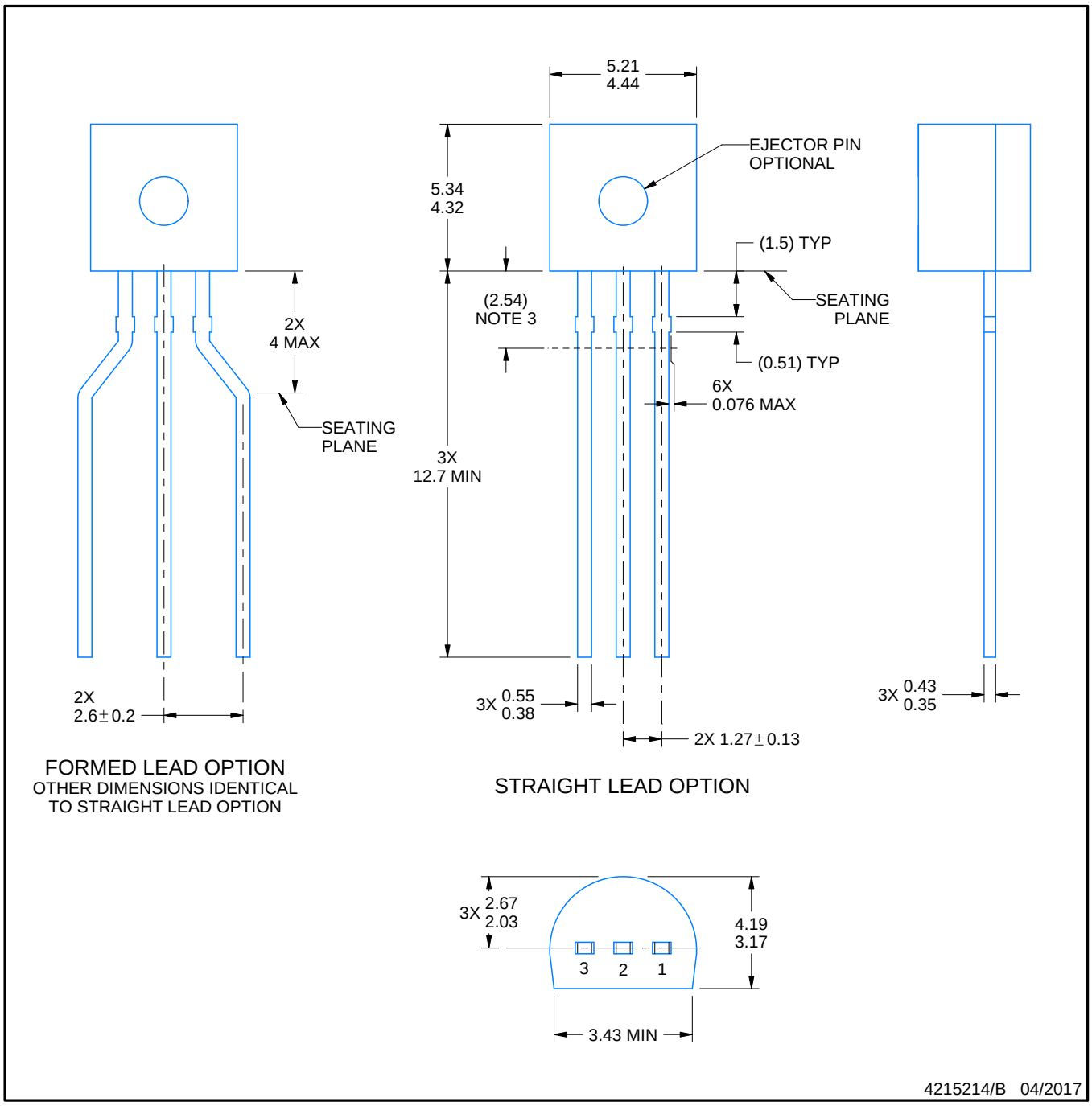

NOTES:

1. All linear dimensions are in millimeters. Any dimensions in parenthesis are for reference only. Dimensioning and tolerancing per ASME Y14.5M.
2. This drawing is subject to change without notice.
3. Lead dimensions are not controlled within this area.
4. Reference JEDEC TO-226, variation AA.
5. Shipping method:
   a. Straight lead option available in bulk pack only.
   b. Formed lead option available in tape and reel or ammo pack.
   c. Specific products can be offered in limited combinations of shipping medium and lead options.
   d. Consult product folder for more information on available options.

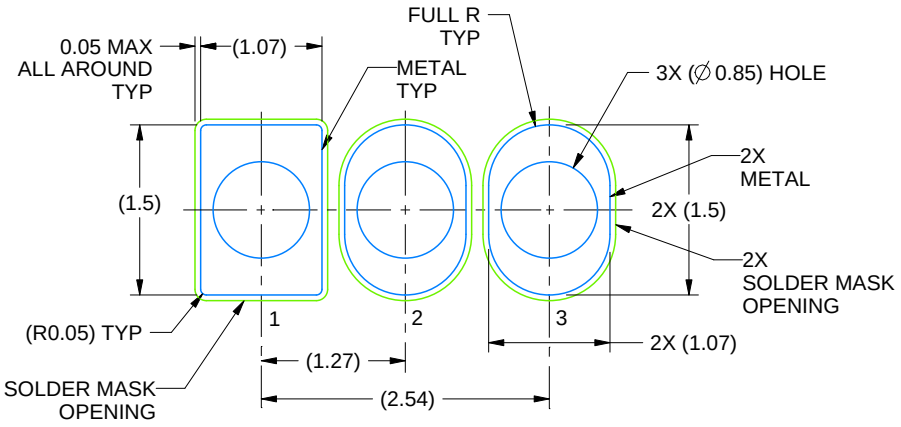

LAND PATTERN EXAMPLE
STRAIGHT LEAD OPTION
NON-SOLDER MASK DEFINED
SCALE:15X

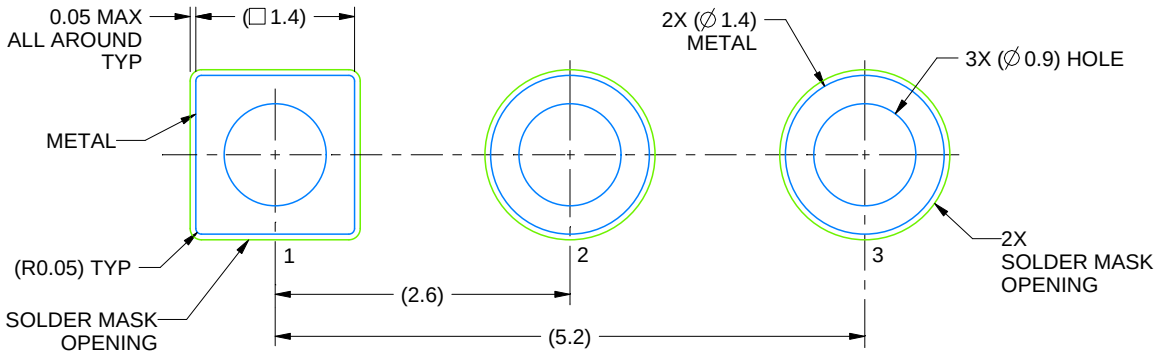

LAND PATTERN EXAMPLE
FORMED LEAD OPTION
NON-SOLDER MASK DEFINED
SCALE:15X

4215214/B 04/2017

LP0003A

TO-92 - 5.34 mm max height

TO-92

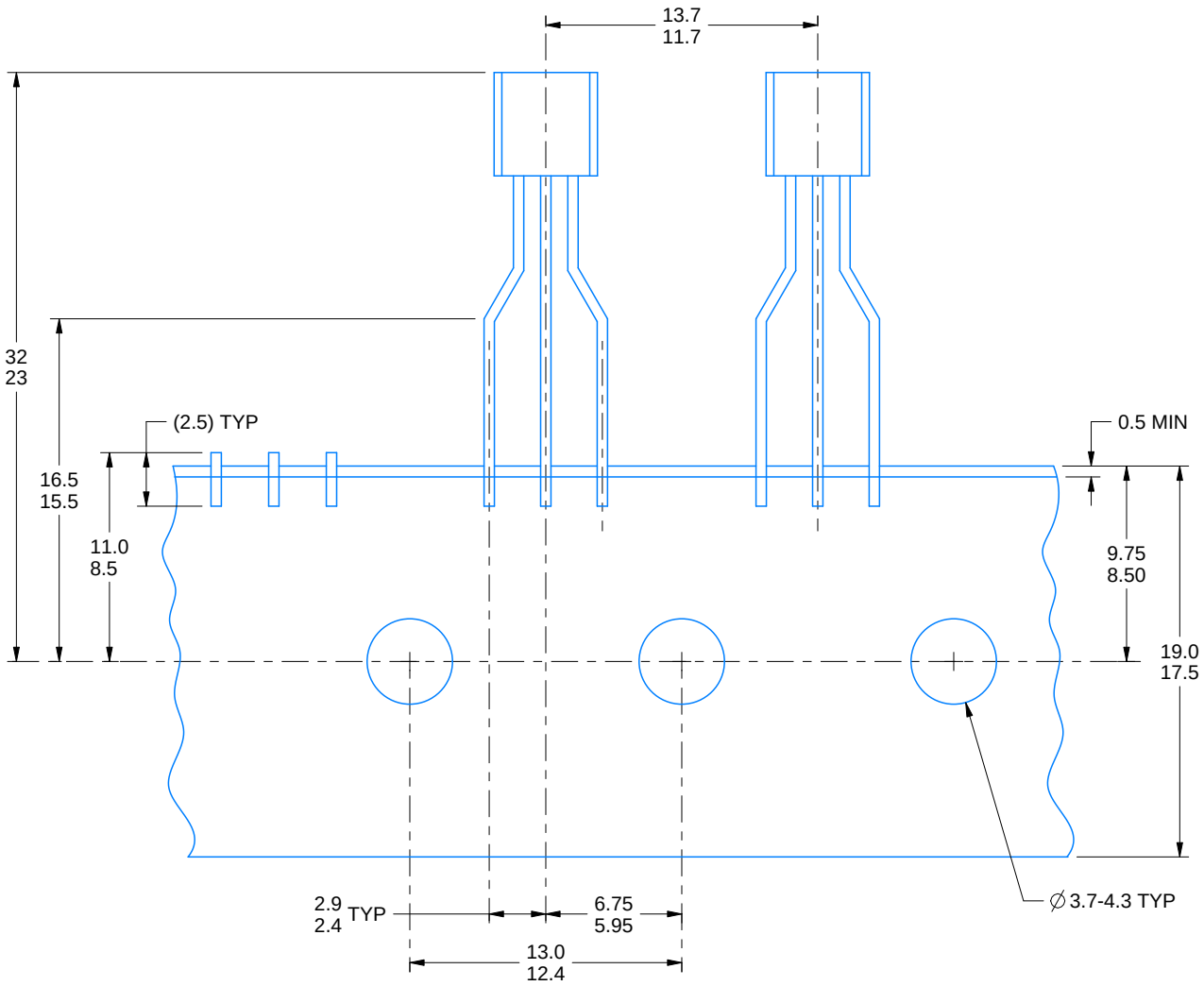

FOR FORMED LEAD OPTION PACKAGE

4215214/B 04/2017

PACKAGE OUTLINE

DBZ0003A

SOT-23 - 1.12 mm max height

SMALL OUTLINE TRANSISTOR

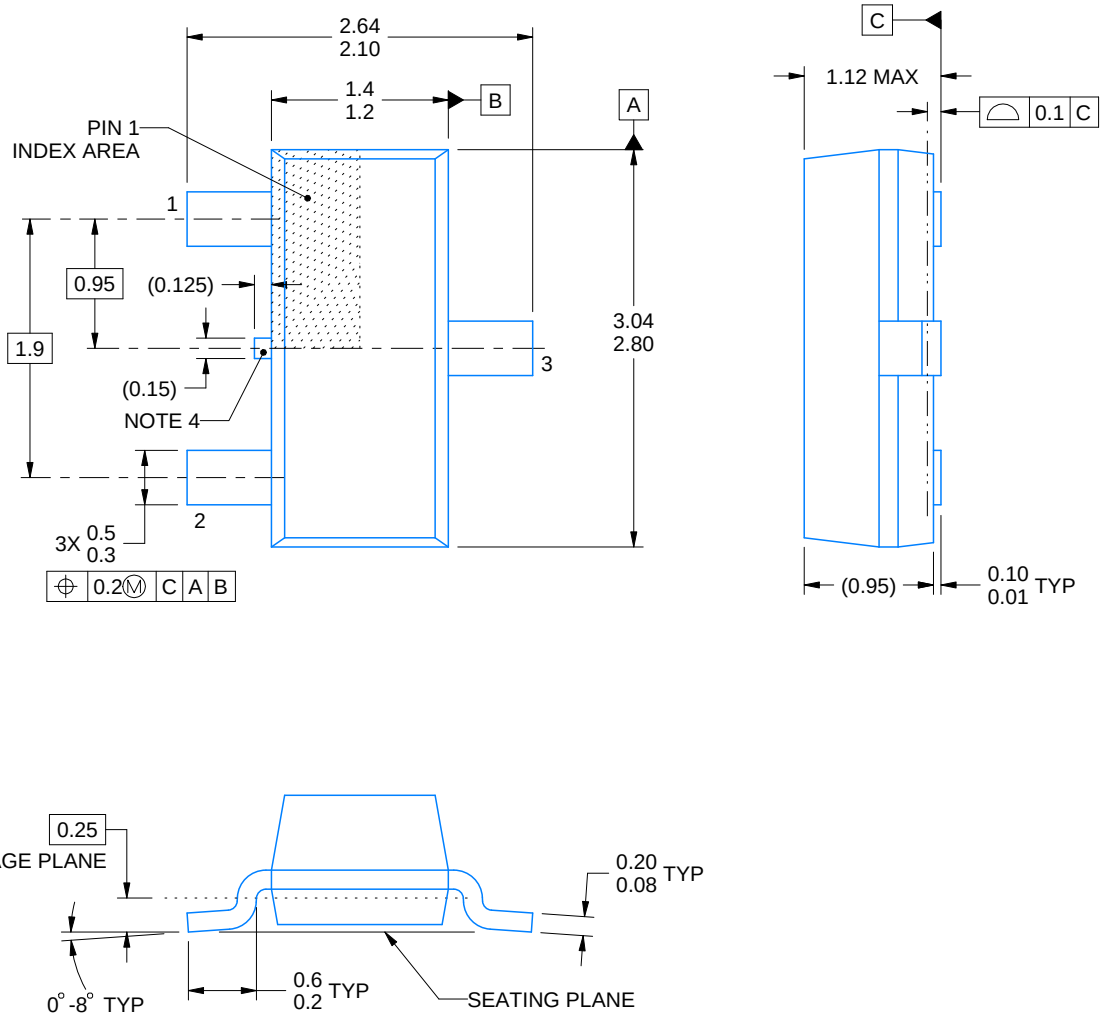

4214838/D 03/2023

NOTES:

1. All linear dimensions are in millimeters. Any dimensions in parenthesis are for reference only. Dimensioning and tolerancing per ASME Y14.5M.
2. This drawing is subject to change without notice.
3. Reference JEDEC registration TO-236, except minimum foot length.
4. Support pin may differ or may not be present.

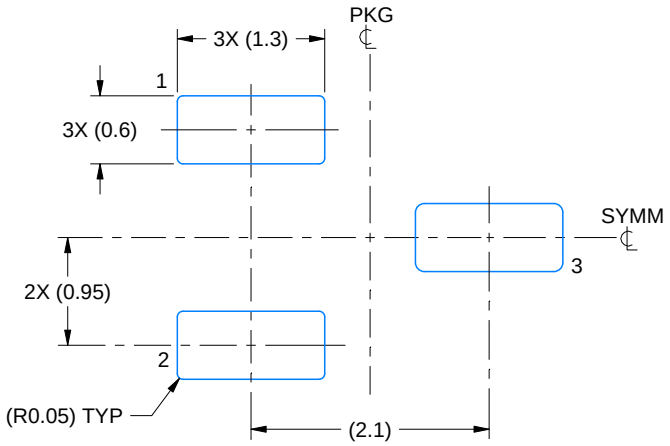

LAND PATTERN EXAMPLE
SCALE:15X

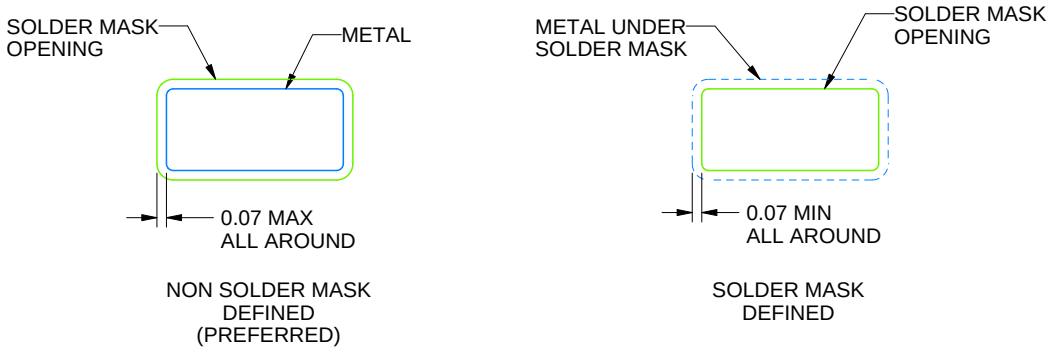

SOLDER MASK DETAILS

4214838/D 03/2023

NOTES: (continued)

4. Publication IPC-7351 may have alternate designs.
5. Solder mask tolerances between and around signal pads can vary based on board fabrication site.

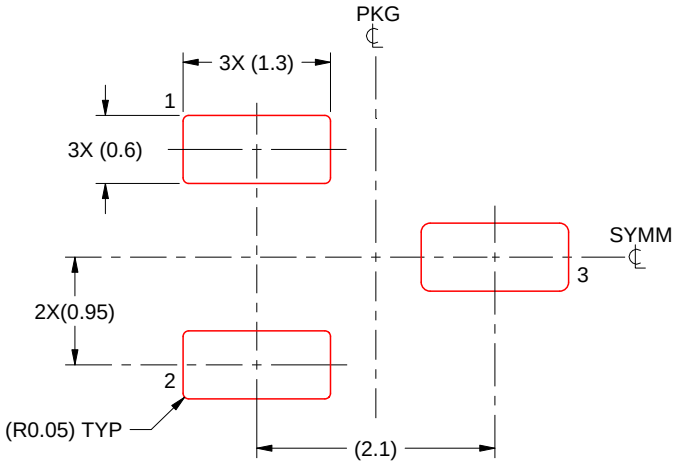

SOLDER PASTE EXAMPLE
BASED ON 0.125 THICK STENCIL
SCALE:15X

4214838/D 03/2023

NOTES: (continued)

6. Laser cutting apertures with trapezoidal walls and rounded corners may offer better paste release. IPC-7525 may have alternate design recommendations.
7. Board assembly site may have different recommendations for stencil design.

IMPORTANT NOTICE AND DISCLAIMER

TI PROVIDES TECHNICAL AND RELIABILITY DATA (INCLUDING DATA SHEETS), DESIGN RESOURCES (INCLUDING REFERENCE DESIGNS), APPLICATION OR OTHER DESIGN ADVICE, WEB TOOLS, SAFETY INFORMATION, AND OTHER RESOURCES “AS IS” AND WITH ALL FAULTS, AND DISCLAIMS ALL WARRANTIES, EXPRESS AND IMPLIED, INCLUDING WITHOUT LIMITATION ANY IMPLIED WARRANTIES OF MERCHANTABILITY, FITNESS FOR A PARTICULAR PURPOSE OR NON-INFRINGEMENT OF THIRD PARTY INTELLECTUAL PROPERTY RIGHTS.

These resources are intended for skilled developers designing with TI products. You are solely responsible for (1) selecting the appropriate TI products for your application, (2) designing, validating and testing your application, and (3) ensuring your application meets applicable standards, and any other safety, security, regulatory or other requirements.

These resources are subject to change without notice. TI grants you permission to use these resources only for development of an application that uses the TI products described in the resource. Other reproduction and display of these resources is prohibited. No license is granted to any other TI intellectual property right or to any third party intellectual property right. TI disclaims responsibility for, and you will fully indemnify TI and its representatives against, any claims, damages, costs, losses, and liabilities arising out of your use of these resources.

TI’s products are provided subject to TI’s Terms of Sale or other applicable terms available either on ti.com or provided in conjunction with such TI products. TI’s provision of these resources does not expand or otherwise alter TI’s applicable warranties or warranty disclaimers for TI products.

TI objects to and rejects any additional or different terms you may have proposed.

Mailing Address: Texas Instruments, Post Office Box 655303, Dallas, Texas 75265
Copyright © 2024, Texas Instruments Incorporated