TAOGLAS



Datasheet

Airvu Filter Series

Part No:
DBP.1567.S.A.50

Description:

Dielectric Band Pass Filter for 1567.5MHz

Bandwidth 95MHz

Features:

Center Frequency 1567.5MHz

Bandwidth 95MHz

Low Insertion Loss

Band Pass-Band Ripple

High Ultimate Attenuation

Dimensions: 9.6*8.6*4 mm

RoHS & Reach Compliant

1.	Introduction	3
2.	Specifications	4
3.	Characteristics	5
4.	Mechanical Drawing	6
5.	Recommended Reflow Solder Profile	7
6.	Environmental Reliability	8
7.	Other	10
8.	Packaging	11
	Changelog	

Taoglas makes no warranties based on the accuracy or completeness of the contents of this document and reserves the right to make changes to specifications and product descriptions at any time without notice. Taoglas reserves all rights to this document and the information contained herein. Reproduction, use or disclosure to third parties without express permission is strictly prohibited.

1. Introduction



Taoglas are utilizing their deep understanding of the RF component design and manufacturing process to provide high-quality, small-form-factor, cost-effective and easy to implement RF filters, known as the Airvu Filter Series. The Taoglas Filters Division will feature a range of off- the-shelf filters for a variety of applications, including filters for emerging license free bands used for GPS/GLONASS/BeiDou applications. We can also work with customers to develop bespoke filter solutions.

Taoglas dielectric filters are designed to be used in wireless transmitters or receivers. These filters are designed to protect the LNA from noisy out of band emissions originated from nearby transmitters that can overdrive, or even damage your LNA. Overdriving the LNA results in non-linear distortion which negatively impacts the sensitivity of your receiver.

By selecting the proper Taoglas filter you can eliminate unnecessary out of band noise while maintaining minimal in-band insertion loss. The filter is manufactured as a single ceramic block [monoblock] which provides high reliability, low insertion loss and high attenuation in a simple compact SMD package.

The DBP.1567.S.A.50 is a standard Taoglas product but can be customized for specific customer needs. For further information please contact your regional Taoglas customer support team.

2. Specifications

Electrical	
Centre Frequency (MHz)	1567.5MHz
Bandwidth	fo ±47.5 [1520~1615] 95MHz
Insertion Loss	1.0 dB max
Passband Ripple	0.5 dB max
Return Loss	< -10 dB
Attenuation	≥6 dB at 1467.5 MHz ≥4 dB at 1667.5 MHz ≥30 dB at 1367.5 MHz ≥18 dB at 1767.5 MHz
In/Out Impedance	50 Ω
Power Dissipation	1.0 W min.
Mechanical	
Dimensions	9.6*8.6*4.0 (L*W*H)
Material	Ceramic
Finish	Ag plated
Environmental	
Operating Temperature	-40°C to 85°C
Storage Temperature	-40°C to 85°C
Moisture Sensitivity Level (MSL)	3 (168 Hours)

3. Characteristics

3.1 Pass Band Return & Insertion Loss

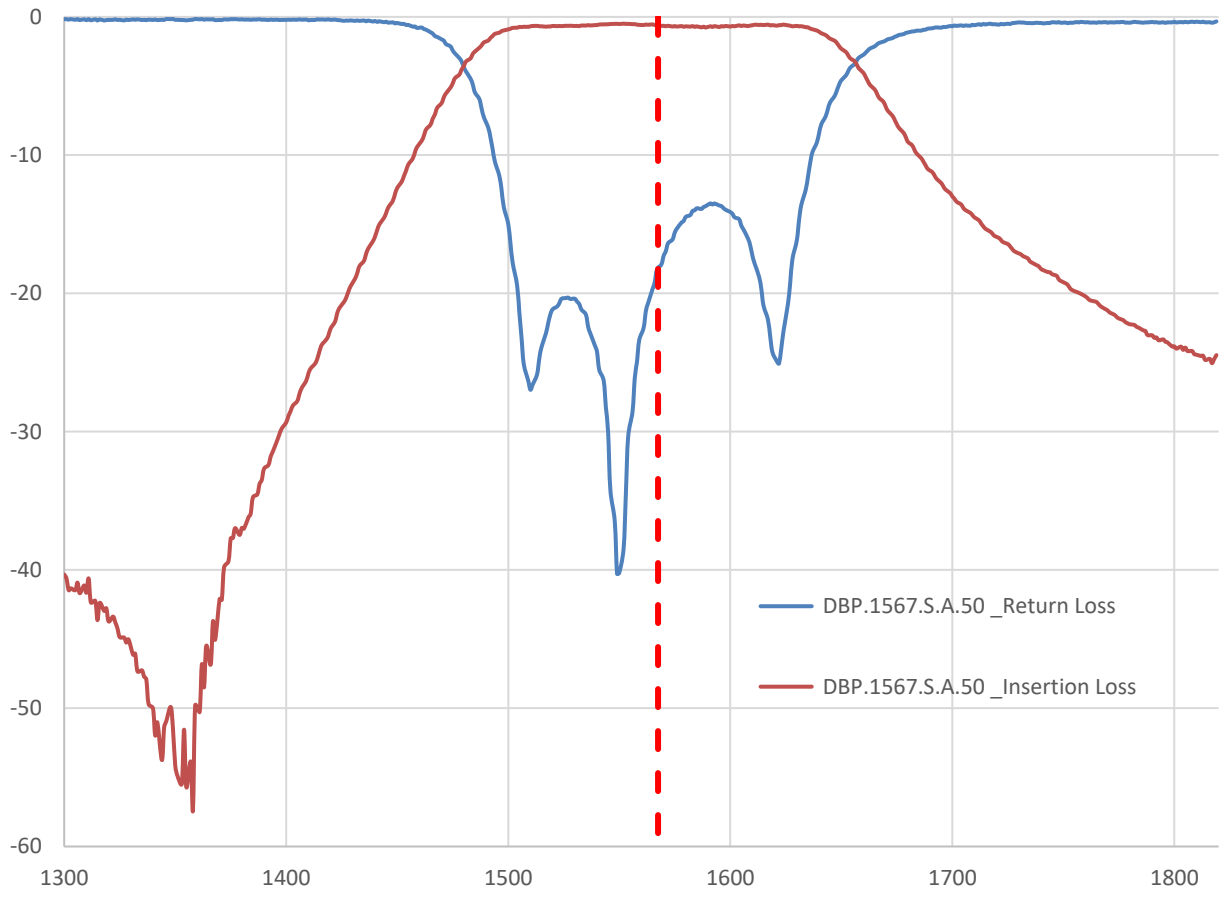

4. Mechanical Drawing

4.1 Component Drawing

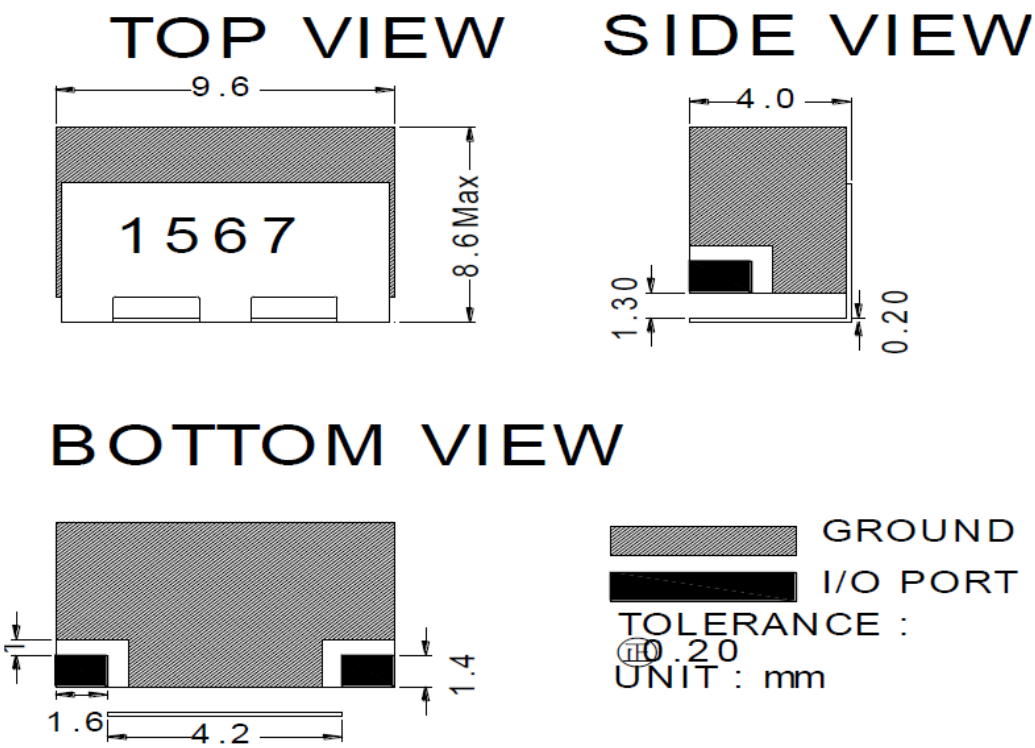

4.2 Recommended PCB Layout

Note: Test PCB material: FR4 ε_r 4.4; T=0.6mm

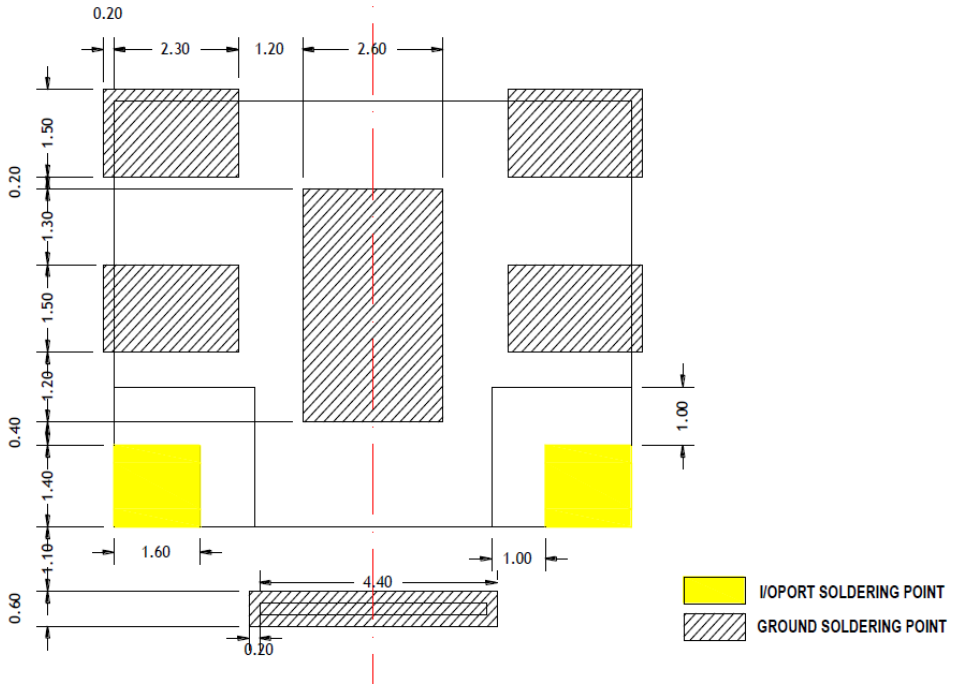

5. Recommended Reflow Soldering Profile

The DBP.1567.S.A.50 can be assembled by following the recommended soldering temperatures are as follows:

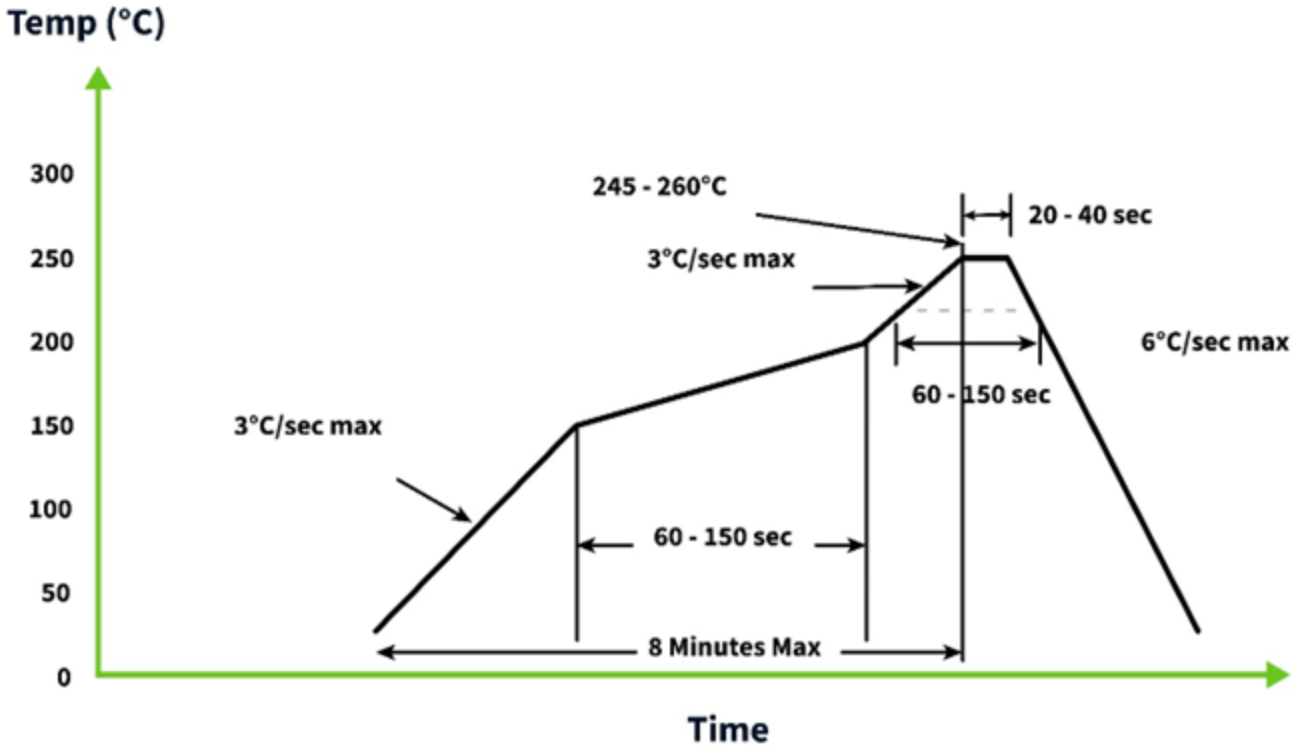

*Temperatures listed within a tolerance of +/- 10º C

Smaller components are typically mounted on the first pass, however, we do advise mounting the DBP.1567.S.A.50 when placing larger components on the board during subsequent reflows.

6. Environmental Reliability

6.1. STORAGE CONDITIONS:

6.1.1. Use the product of former delivery first.

6.1.2. Temperature: 0℃ to 40 ℃
Humidity: 80%RH or less

6.1.3. The product should not be stored exceeding six months (as packed by Taoglas) or one month (once unpacked). Use the product within that period.

6.2. STANDARD CONDITION

This standard shall satisfy the condition of Table 1 after the following test 6.2.

6.3. TEST METHOD

The filter shall withstand the following test condition.

6.3.1. Low Temperature Hold Test :-40℃

Unit shall be subjected to the above condition for 500 hours and then be left for more than 2 hours at room temperature.

6.3.2. High Temperature Hold Test:+100℃

Unit shall be subjected to the above condition for 500 hours and then be left for more than 2 hours at room temperature.

6.3.3. Humidity Resistance Test:

Unit shall be subjected to the 85±2℃, 85~90% relative humidity for 500 hours and then be left for more than 2 hours at 25±5℃ in less than 85% relative humidity.

6.3.4. Vibration Resistance Test:

The vibration frequency shall be varied within 10-60 Hz with the amplitude of 1.5mm for 20 minutes. Devices are applied to vibration in each of three mutually perpendicular planes for 2 hours.

6.3.5. Mechanical Shock Resistance Test:

A half sine wave shock with a maximum acceleration of 30 G's and duration of 11 msec. Unit is applied in six directions at right angles to each other by three shocks in each direction.

6.3.6. Thermal Shock Resistance Test:

After the unit is applied to thermal shock -40℃(30min) ⇔ +25℃(within 5min) ⇔ +100℃(30min) ⇔ +25℃(within 5min) soak at each temperature with transition time less than 10 seconds for 350 cycles and then be left for more than 1 to 2 hour at 25±5℃ in less than 65% relative humidity.

6.3.7. Lead Pins Heat Resistance Test: (L type and M type series)

After the lead pins of the unit are soaked in solder bath at 270 ± 10℃ for 5 seconds and then be left for more than 1 hour at 25±5℃ in less than 65% relative humidity.

6.3.8. Adhesion Test:

The device is subjected to be soldered on test PCB. Then apply 0.5Kg(5N) of force for 10±1 seconds in the direction of arrow. (the soldering should be done by reflow and be conducted with care so that the soldering is uniform and free of defect by stress such as heat shock)

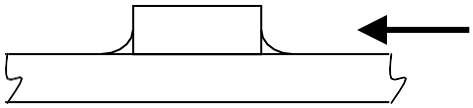

6.3.9. Bending Resist Test

Weld the product to the center part of the PCB with the thickness 1.6±0.2mm as the illustration shows, and keep exerting force arrow-ward on it at speed of :1mm/S, and hold for 5±1S at the position of 1.5mm

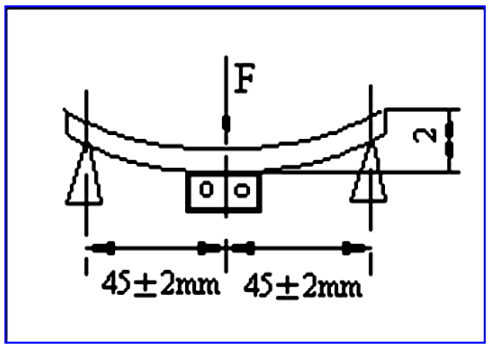

7. Other

7.1. IN CASE OF ANY PROBLEM REGARDING THIS SPECIFICATION, BOTH CUSTOMER AND Taoglas SHALL DISCUSS AND SOLVE IT.

7.2. INSTALLING A DIELECTRIC FILTER /DUPLEXER:

7.2.1. How to install dielectric filter/duplexer:

Taoglas recommend reflow process for the installation of dielectric filter/duplexer onto PCB. Soldering the dielectric filter/duplexer onto a PCB with a hand soldering iron is not recommended.

7.2.2. Connecting I/Os:

The edge of metal shield, if any, shall be soldered to the electrode of PCB board by reflow process. Tx, Ant, and Rx portion of the PCB shall have either via hole or through hole.

I/Os of the filter/duplexer shall be connected to 50- ohm strip lines that pass through these holes to the backside of the PCB. The 50- ohm strip lines from the duplexer shall be connected to the next circuit element.

It is important to place the filter/duplexer on one side and the connecting strip lines on the other side in order to avoid the interferences by the signal radiation from the strip lines. Such interferences may change the duplexer performance.

7.2.3. Solder and resist area:

Solder and resist area shall be prepared according to referenced Land pattern for each part number provided by Taoglas. The Referenced Land Pattern may be found in Taoglas's Product Catalog. The solder area under the filter/duplexer should be divided into smaller patches with narrow strips of resist area. This is to help the evacuation of the gasses generated from the solder paste during reflow process.

7.3. FILTER REPLACEMENT:

7.3.1. Removal of filters:

If filter replacement is necessary, it is recommended that a directed source hot air repair station be used. Use tweezers to handle the filter. Do not expose the filter to temperatures in excess of 220 ºC as damage may occur making post-mortem difficult.

7.3.2 Installing Replacement Filter:

It is helpful that the filter be preheated to 180 ºC before reflow. Pre-tinning the filter with a soldering iron is not recommended due to possible damage generated by a concentrated heat source. Use tweezers to handle the filter. Do not place material handling devices inside of the resonator holes as filter damage may occur. The use of the same silver bearing solder paste is recommended for filter rework or replacement. As with the initial reflow, replacement filters should not be exposed to temperatures in excess of 215 ºC.

Disclaimer: The center of this section is presented only as the recommendation or the reference for the use and installation of Taoglas dielectric ceramic filter/duplexer. Since Taoglas does not know any particular conditions, circumstances, and environment of each customer, Taoglas does not take any responsibility for the consequences caused by use out of this specification document. The readers of this document should examine all possible technical issues regardless of being discussed in this document.

8. Packaging

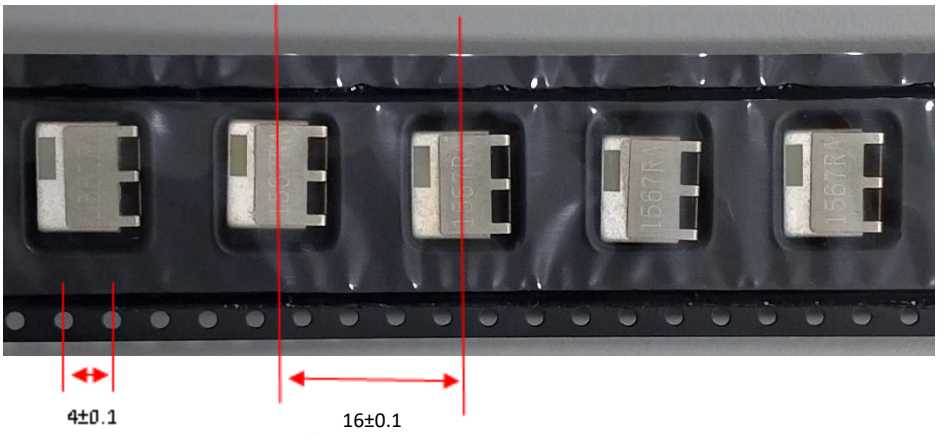

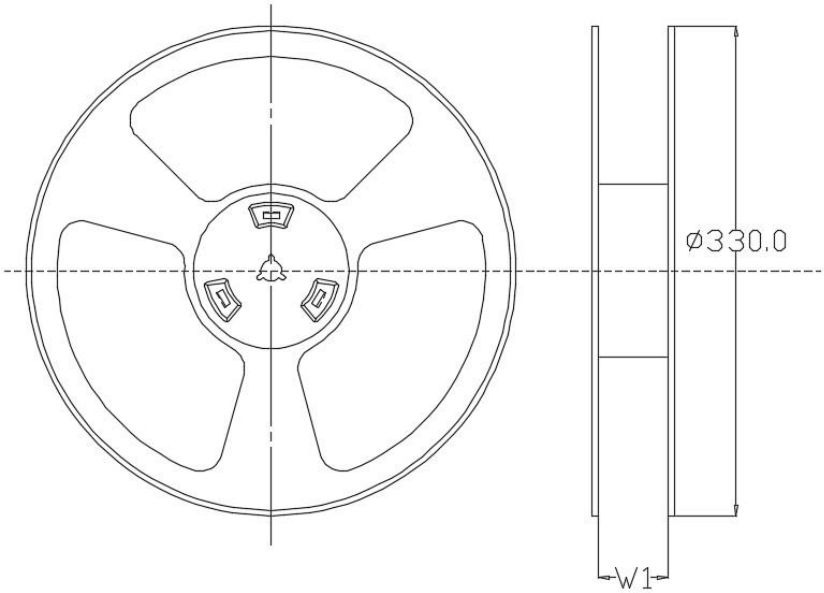

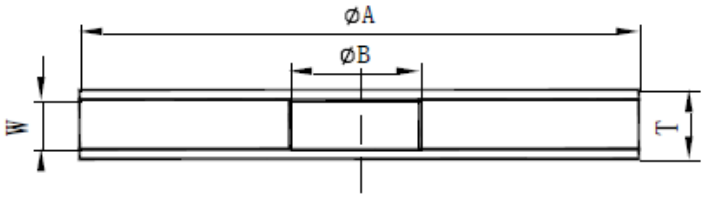

ϕA	ϕB	W	T	Pieces per reel	Carrier tape size
330±3	80min	29min	31max	1000typ.	24

1. Outer Carton
Quanyity:5000PCS

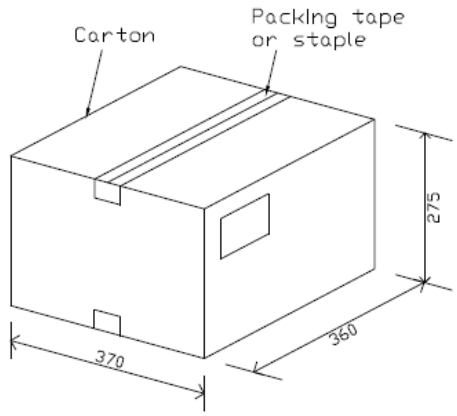

2. Inner Carton
Quanyity:1000PCS

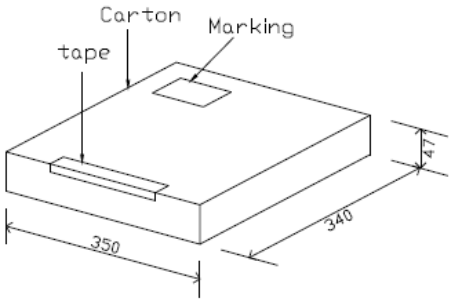

3. Bag
Quanyity:1000PCS

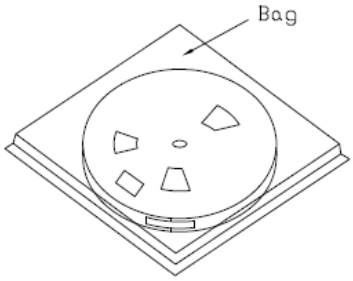

4. Taping
Quanyity:1000PCS

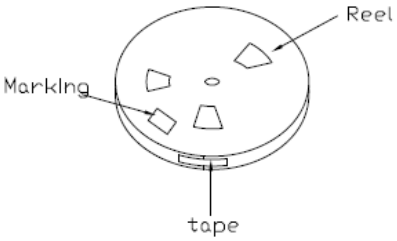

Unit:mm

Changelog for the datasheet

SPE-20-8-042 – DBP.1567.S.A.50

Revision: C (Current Version)	
Date:	2023-09-05
Notes:	Updated Solder Reflow Information
Author:	Cesar Sousa

Previous Revisions

Revision: B	
Date:	2021-09-02
Notes:	Added MSL rating
Author:	Erik Landi

Revision: A (Original First Release)	
Date:	2020-08-12
Notes:	
Author:	Jack Conroy

TAOGLAS®

www.taoglas.com



© Taoglas