DataSheet No.: E16017
Version: V0
Date: 2023/06/03

睿思

PEWM5930

High-Precision Low-Inductance Alloy Current Sensing Resistor

Resistance	0.5mΩ
Tolerance	±0.5%
TCR	≤±100ppm/℃
Rated Current	142A

Applications

Automotive Electronics
Precision Power Supply
Instrumentation
Testing & Measurement Equipment
Medical Equipment

Better Solution for Sustainable High End Manufacturing

睿思

PEWM5930

High-Precision Low-Inductance
Alloy Current Sensing Resistor

Low-Inductance Alloy Current Sensing Resistor
High Precision, Reliability & Stability

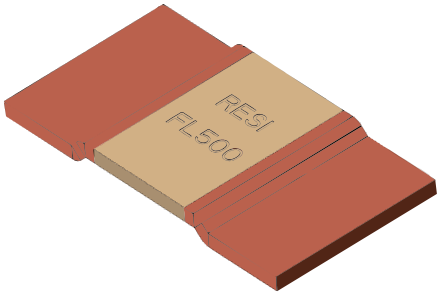

RoHS　AEC-Q200　3D

Introduction

PEWM series is based on a precision resistive alloy, welded by a specialized electron beam welding equipment. Both resistive alloy and welding equipment are independently designed and manufactured by C&B Electronics. Because of controlling the consistency of resistive alloys, precision processing ability and efficient welding, PEWM achieves a maximum target tolerance of ± 0.5% after stamping without trimming. TCR of PEWM series within the temperature range of +20 ℃ to +170 ℃ is ≤ ±100ppm/℃. Inductance is < 3nH.

"Trimming Free" technology avoids the loss of rated current caused by trimming and also avoids current accumulation hotspots caused by trimmed notch, greatly improving the reliability of the product. Meanwhile, due to the improvement of welding quality, thermal EMF of the product is significantly reduced, improving its long-term stability.

PEWM series, from raw materials, core equipment, to core processes, achieves independent and controllable production, stable quality, and timely delivery. If the standard specifications cannot meet your needs, please contact our sales for consultation. Resi is committed to providing the best precision resistor solutions to meet the needs of customers in instrumentation, medical equipment, automotive electronics, precision power supplies, testing and measurement equipment and other fields.

Electrical Parameters

Size	Resistance	Rated Power (+70℃)	Max. Operating Current	Operating Temperature	Tolerance
PEWM5930	0.5mΩ	10W	142A	-55~+170℃	±0.5% ±1% ±5%

TCR ppm/℃	Thermal Resistance*	Inductance	Technology	Welding Tech.	Formation
≤±100ppm/℃ (20℃~+170℃，20℃Ref)	7.5℃/W	<3nH	Trimming Free	Electron Beam Welding	Stamping

* Thermal Resistance: Refer to the internal thermal resistance between the center of the resistive alloy and the copper electrode.
As the heat dissipation efficiency is influenced by operating environment, copper bus bars, PCB design, etc., this parameter is only for reference.

C&B Electronics Shenzhen CO., LTD. | www.resistor.today | resi@cbeureka.com | Tel:0755-83981080/83981010

PEWM5930

High-Precision Low-Inductance
Alloy Current Sensing Resistor

Dimensions

Unit: mm

Resistor

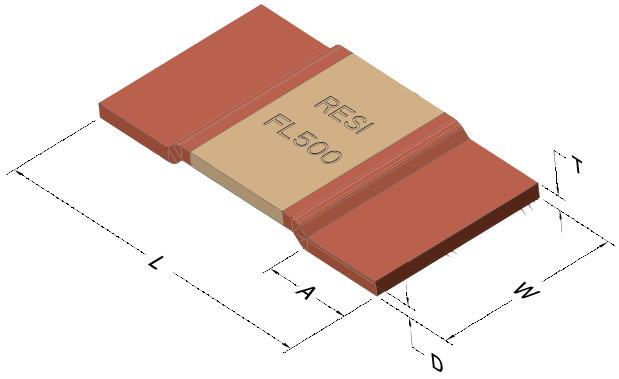

Solder Pad

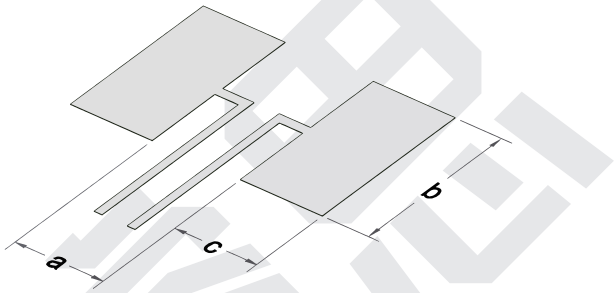

Resistance	L	W	A	T	D	a	b	c	Packaging	Quantity Per Reel	Net Weight
0.5mΩ	15.0±0.3	7.75±0.3	3.8±0.3	0.65±0.2	0.5±0.2	5.6±0.1	8.75±0.2	5.2±0.2	Tape&Reel	2000pcs	0.66±0.1g

Part Number Information

Example: PEWM5930FL500K9 (PEWM 5930 ±1.0% 0.5mΩ ±100ppm/°C Standard)

P	E	W	M	5	9	3	0	F	L	5	0	0	K	9

Series	Size	Tolerance	Resistance	TCR	Code
PEWM	5930	D=±0.5% F=±1.0% J=±5.0%	L500=0.5mΩ	K=±100ppm/℃	9=Standard 0-8=Custom

For higher/lower resistance, tighter tolerance, higher power, lower TCR and larger size, please contact us.

C&B Electronics Shenzhen CO., LTD. | www.resistor.today | resi@cbeureka.com | Tel:0755-83981080/83981010

PEWM5930

High-Precision Low-Inductance Alloy Current Sensing Resistor

Performance

Test	Test Method	Standards	Typical	Max.
High Temperature Storage	1000h@+170°C, unpowered	AEC-Q200 TEST 3 MIL-STD-202 Method 108	▵R≤±0.5%	▵R≤±1.0%
Thermal Shock	-55°C, 15min~ambient temperature<20s~+155°C, 15min, 1000 cycles	AEC-Q200 TEST 16 MIL-STD-202 Method 107	▵R≤±0.1%	▵R≤±0.5%
Bias Humidity	+85°C, 85%RH, powered no less than 10% rated power for 1000h	AEC-Q200 TEST 7 MIL-STD-202 Method 103	▵R≤±0.2%	▵R≤±0.5%
Load Life	2000h @ +70°C, rated power, 90min on，30min off +70°C refers to terminal temperature	AEC-Q200 TEST 8 MIL-STD-202 Method 108	▵R≤±0.5%	▵R≤±1.0%
Resistance to Solvent	Immerse in solvent for 3 min and wipe 10 times. Three cycles of three solvents. Dry at ambient temperature after cleaning	AEC-Q200 TEST 12 MIL-STD-202 Method 215	Clear marking. No visible damage	
Mechanical Shock	Half Sine Wave, peak acceleration 100g's, pulse duration 6ms, 3 times in each of six directions, on three different axes	AEC-Q200 TEST 13 MIL-STD-202 Method 213	▵R≤±0.05%	▵R≤±0.2%
Vibration	10-2KHz, 5g's, 20min/cycle, 12 cycles in each directions of X Y Z	AEC-Q200 TEST 14 MIL-STD-202 Method 204	▵R≤±0.05%	▵R≤±0.2%
Resistance to Solder Heat	+260°C tin bath for 10s	AEC-Q200 TEST 15 MIL-STD-202 Method 210	▵R≤±0.2%	▵R≤±0.5%
Solderability	+245°C tin bath for 3s	AEC-Q200 TEST 18 IEC 60115-1 4.17	No visible damage. 95% minimum coverage	
TCR	+20℃ and +170℃, +20℃ Ref.	AEC-Q200 TEST 19 IEC 60115-1 4.8	Refer to tested curve, max. value ≤ 100ppm/℃	
Substrate Bending	2mm. Duration: 60s.	AEC-Q200 TEST 21 AEC-Q200-005	▵R≤±0.01%	▵R≤±0.1%
Short Time Overload	5x rated voltage, 5s	IEC 60115-1 4.13	▵R≤±0.1%	▵R≤±0.5%
Low Temperature Storage	-55℃ for 96h, unpowered	IEC 60068-2-1	▵R≤±0.1%	▵R≤±0.5%
Moisture Resistance	Apply T=24 h/cycle, zero power, method 7a and 7b are not required	MIL-STD-202 Method 106	▵R≤±0.1%	▵R≤±0.5%

Temperature Coefficient of Resistance Test Curve

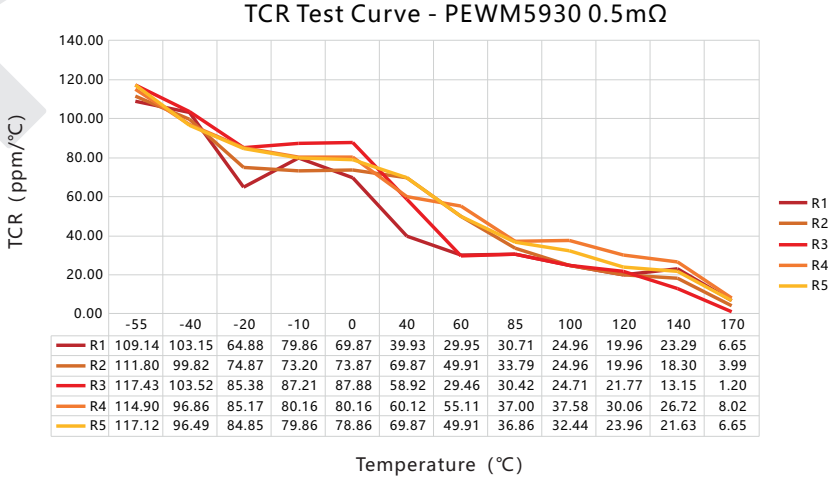

	-55	-40	-20	-10	0	40	60	85	100	120	140	170
R1	109.14	103.15	64.88	79.86	69.87	39.93	29.95	30.71	24.96	19.96	23.29	6.65
R2	111.80	99.82	74.87	73.20	73.87	69.87	49.91	33.79	24.96	19.96	18.30	3.99
R3	117.43	103.52	85.38	87.21	87.88	58.92	29.46	30.42	24.71	21.77	13.15	1.20
R4	114.90	96.86	85.17	80.16	80.16	60.12	55.11	37.00	37.58	30.06	26.72	8.02
R5	117.12	96.49	84.85	79.86	78.86	69.87	49.91	36.86	32.44	23.96	21.63	6.65

C&B Electronics Shenzhen CO., LTD. | www.resistor.today | resi@cbeureka.com | Tel:0755-83981080/83981010

Derating Curve

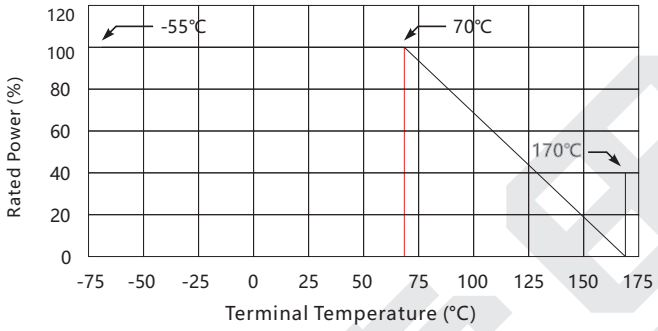

Reflow Soldering Profile

Resistor Surface Temperature:
Pre-Heat: +150℃~+190℃,60~120sec.
Reflow: Above +220℃,90~150sec.
Applicable Solder Composition: Sn-Ag-Cu

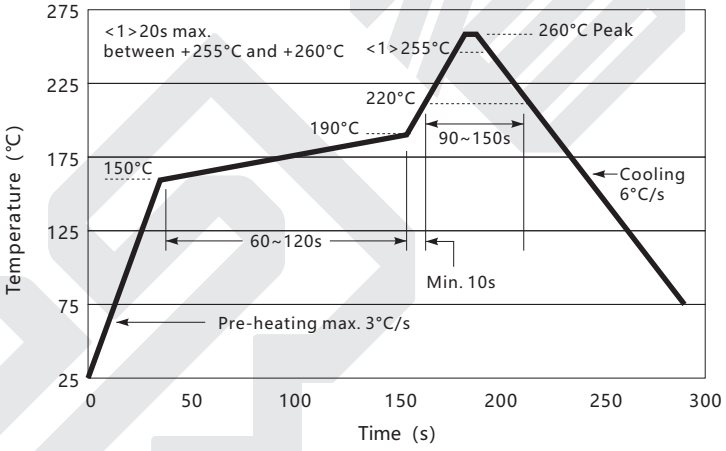

Maximum Pulse Energy Curve

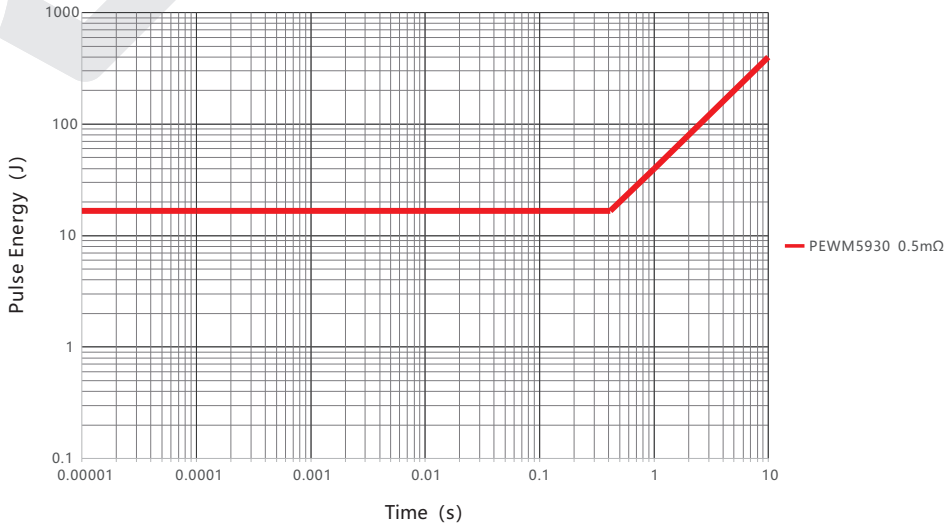

C&B Electronics Shenzhen CO., LTD. | www.resistor.today | resi@cbeureka.com | Tel:0755-83981080/83981010

PEWM5930

High-Precision Low-Inductance
Alloy Current Sensing Resistor

Construction

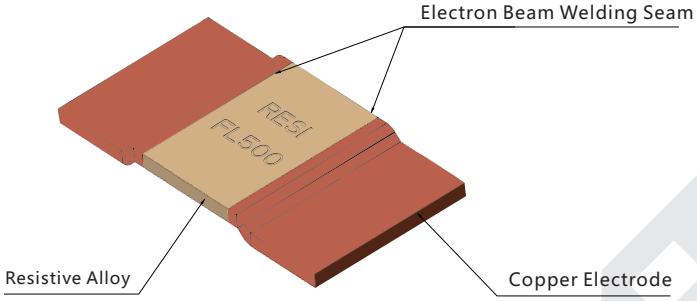

Marking

The first line (four digits) represents brand. The second line (five digits) represents tolerance and resistance.

Size	Illustration	Demonstration
5930		RESI: Brand F: Tolerance L500: Resistance

Storage Instructions

(1) Resistors should be stored at a temperature of 5 to 35 ℃, with a humidity of<60% RH. The humidity should be kept as low as possible.
(2) Resistors should be protected from direct sunlight.
(3) Resistors should be stored in a clean and dry environment free of harmful gases (HCl, Sulfuric acid, H2S, etc.)
(4) Do not move the resistor from the packaging unless use it.
(5) Under the above storage conditions, the resistor can be stored for at least 1 year.

Usage Suggestions

(1) Please protect the surface of the resistor during use. Prevent defects such as scratches, bumps, and oil stains on the surface.
(2) Do not use sharp tweezers to move the resistor. Scratches on the surface can cause resistance drift and resistor failure.
(3) When installing and using resistors, avoid the impact of mechanical stress on the resistor.
(4) The long-term operating power of resistors should be ≤ rated power to avoid resistance drift caused by long-term overload.
(5) Please refer to the derating curve when operating under high temperature conditions or poor heat dissipation environment.
(6) If the operating conditions exceed the pulse specified in the pulse curve, a systematic evaluation is required.
(7) If the resistor is not used after being moved from the packaging, it should be stored under vacuum to avoid risks such as poor welding caused by oxidation of the resistor.

C&B Electronics Shenzhen CO., LTD. | www.resistor.today | resi@cbeureka.com | Tel:0755-83981080/83981010

Packaging

Tape Specifications

Unit: mm

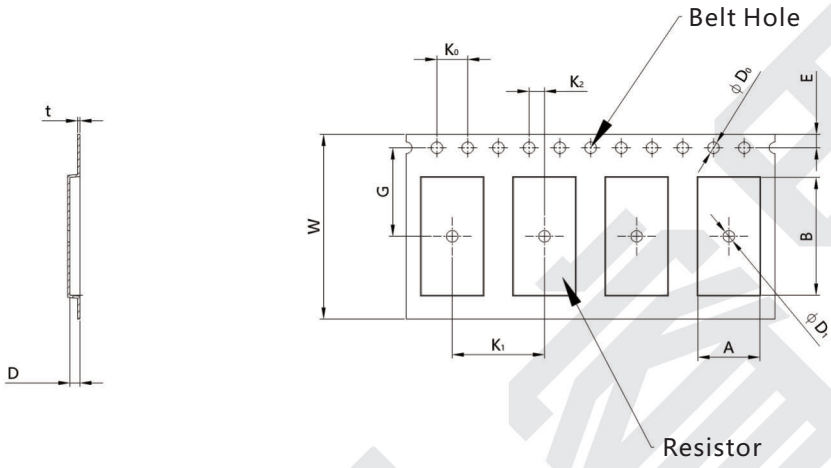

Resistance	A	B	φD0	φD1	K0	K1	K2	E	G	W	D	t
0.5mΩ	8.05±0.2	15.30±0.2	1.5±0.1	1.5±0.1	4.00±0.1	12.00±0.1	2.00±0.1	1.75±0.1	11.50±0.05	24.00±0.3	1.3±0.1	0.3±0.05

Reel Specifications

Unit: mm

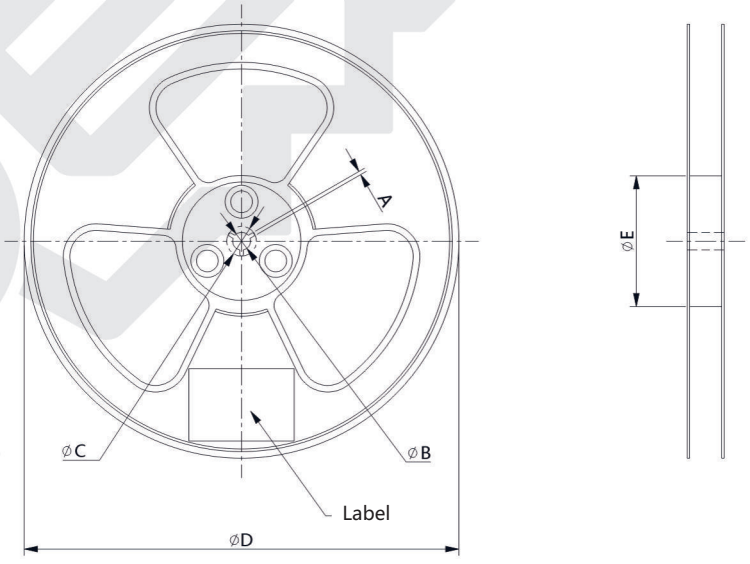

A	φB	φC	φD	φE
1.5 Min.	13.0 +0.5/-0.2	20.2 Min.	330±2	100±2

Popular Part Numbers

Part Number	Size	Tolerance	Resistance	TCR	Power	Max. Operating Current
PEWM5930DL500K9	5930	±0.5%	0.5mΩ	≤±100ppm/℃	10.0W	142A
PEWM5930FL500K9	5930	±1%	0.5mΩ	≤±100ppm/℃	10.0W	142A
PEWM5930JL500K9	5930	±5%	0.5mΩ	≤±100ppm/℃	10.0W	142A

Revision

Version	Revised Content	Date	Approver
V0	Initial Issue	2023.06.03	LWW

Disclaimer

All products, datasheets and data can be changed without prior notice.

C&B Electronics Shenzhen CO., LTD., its affiliates, distributors, employees, and any other person acting on its behalf (collectively referred to as "C&B Electronics") shall not bear any legal responsibility for any errors, inaccuracies, or incompleteness of information related to the product disclosed under this agreement or other disclosures.

Product datasheet does not constitute an extension or revision of the purchase terms and conditions in C&B Electronics, including but not limited to the warranties under this agreement.

Unless specified in the purchase terms and conditions, C&B Electronics makes no guarantees, representations or warranties.

To the maximum extent permitted by applicable laws, C&B Electronics hereby makes the following disclaimer:
(1) All liabilities arising from the use of the product;
(2) Including but not limited to all liabilities arising from special, indirect or incidental damages;
(3) All implied warranties, including warranties of suitability for special purposes, non infringement possibility, and marketability.

The information provided in the datasheet and parameter tables may vary in different applications, and the performance of the product may change over time. The recommended application instructions for the product are based on C&B Electronics' understanding and experience of typical requirements. Customers are obligated to verify whether the product is suitable for a specific application based on the parameters provided in the datasheet . Before officially installing or using the product, you should ensure that you have obtained the latest version of relevant information, which can be obtained through the website: resistor.today.

The signing of this agreement does not constitute an express, implied or other form of license related to all intellectual property rights of C&B Electronic Products.

Unless explicitly stated, the products listed in this agreement are not applicable to lifesaving or life sustaining products. In the absence of a clear indication, the customer shall bear all risks caused by unauthorized use of the above products and agree to fully compensate C&B Electronics for all losses caused by such sales or use. For written product terms for such special applications, please contact authorized personnel from C&B Electronics to obtain.

The names and markings on the listed products may be trademarks owned by others.