PLETRONICS OHA4005-10.0M
7.5x5.5mm SMD OCXO

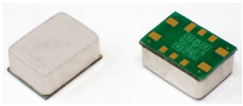

OHA4 Series
7.5 x 5.5 x 3.3 mm
10 Pad SMD Package

Features

- Ovenized Quartz Crystal High Precision Square Wave Generator
- CMOS
- 3.3V nominal Supply Voltage
- 10.0MHz
- ±20ppb -40 to +85°C

Applications

SONET / SDH / DWDM
Test & Measurement
Telecom Transmission & Switching Equipment
Base Stations / Picocell
Wireless Communication Equipment
Packet Timing Protocol (e.g. IEEE-1588)

Electrical Characteristics

Parameter	Min	Typ	Max	Unit	Condition
Frequency	-	10	-	MHz	
Frequency Stability vs Temperature	-	-	±20	ppb	Fmax-Fmin/2, Temperature change 2°C/minute
Initial Frequency Tolerance	-	-	±1.0	ppm	Referenced to 25°C within 30 days of shipment
Frequency Stability vs Supply	-	-	±5	ppb	±5% voltage change
Frequency Stability vs Load	-	-	±5	ppb	CL ± 5%
Output Type		CMOS			CL = 15 pF
Warm-up Time	-	-	60	s	Time until RF output is within ± 0.025 ppm referenced to last frequency reading 1 h after startup
Aging	-	-	±3	ppb	per day after 30 days operation at 25°C, 3.3V
	-	-	±0.3	ppm	per year, after 30 days operation at 25°C, 3.3V
Operating Temperature Range	-40	-	+85	°C	Rate of change for stability specification is <±2°C/minute
Operable Temperature Range	-40	-	+105	°C	
Supply Voltage [1] V_{CC}	3.135	3.3	3.465	V	
Input Current - Turn-on	-	-	600	mA	@ 25°C, 3.3V
Input Current - Steady State	-	-	230	mA	@ 25°C, 3.3V
Phase Noise 1 Hz 10 Hz 100 Hz 1 kHz 10 kHz 100 kHz 1 MHz	-	-72 -110 -143 -158 -163 -164 -165	-	dBc/Hz	
Storage Temperature Range	-55	-	+105	°C	

HCMOS

Parameter	Min	Typ	Max	Unit	Condition
Output Waveform		Squarewave			
“1” Level	2.4	-	-	V	
“0” Level	-	-	0.4	V	
Load	-	15	-	pF	
Duty Cycle	45	50	55	%	@0.5Vcc
Raise/Fall Time	-	-	6	ns	@0.1Vcc~0.9Vcc

Note: [1] Place a 10nF power supply bypass capacitor next to device for correct operation

Copyright © 2023, Pletronics Inc. • 19013 36th Ave. W, Lynnwood, WA 98036 USA • www.pletronics.com • 425-776-1880

Device Marking

P10.00M
YMDDxxx
•

P = Pletronics
10.00M = Frequency (M = MHz)
YMD = Date code (Year-Month-Day: See Table below)
D = Internal Code
S/N: *xxx* = Serial number

* A unique number is assigned for your exact specifications.
Specifications such as part number, frequency stability, supply voltage and operating temperature range, etc. are not identified from marking.
External packaging labels and packing list will correctly identify the ordered Pletronics part number.

Codes for Date Code YMD (Year Month Day)

Code	3	4	5	6	7	Code	A	B	C	D	E	F	G	H	J	K	L	M
Year	2023	2024	2025	2026	2027	Month	JAN	FEB	MAR	APR	MAY	JUN	JUL	AUG	SEP	OCT	NOV	DEC

Code	1	2	3	4	5	6	7	8	9	A	B	C	D	E	F	G	H	J	K	L	M	N	P	R	T	U	V	W	X	Y	Z
Day	1	2	3	4	5	6	7	8	9	10	11	12	13	14	15	16	17	18	19	20	21	22	23	24	25	26	27	28	29	30	31

Package Labeling

P/N Label is 1" x 2.6" (25.4mm x 66.7mm)
Font is Courier New
Bar code is 39-Full ASCII



RoHs Label is 1" x 2.6" (25.4mm x 66.7mm)
Font is Arial

RoHS Compliant
2nd LvL Interconnect
Category=e4
Max Safe Temp=245C for 10s 2X Max

Pletronics Inc. certifies this device is in accordance with the RoHS and REACH directives.
Pletronics Inc. guarantees the device does not contain the following: Cadmium, Hexavalent Chromium, Lead, Mercury, PBB's, PBDE's
Moisture Sensitivity Level: 2 As defined in J-STD-020D
Second Level Interconnect code: e4
Product Weight: 0.153g

Environmental / ESD Ratings

Reliability: Environmental

Parameter	Ref Standard	Condition
Solderability	MIL-STD-202, Method 208	
Mechanical Shock	IEC 60068-2-27	100g, 6ms, half sine wave (3 times for each 3 directions X ,Y, Z)
Vibration	IEC 60068-2-6	10 ~ 2000Hz, 0.75mm, 10g; 1 cycle 30 minutes, test 2 hours. 3 times for each 3 directions X ,Y, Z

Model	Voltage	
Human Body Model	Class 2: 2000V ~ <4000V	JEDEC JS-001-2010
Machine Model	Class B: 200V ~ 400V	JESD22-A115C

Copyright © 2023, Pletronics Inc. • 19013 36th Ave. W, Lynnwood, WA 98036 USA • www.pletronics.com • 425-776-1880

Mechanical Dimensions (mm)

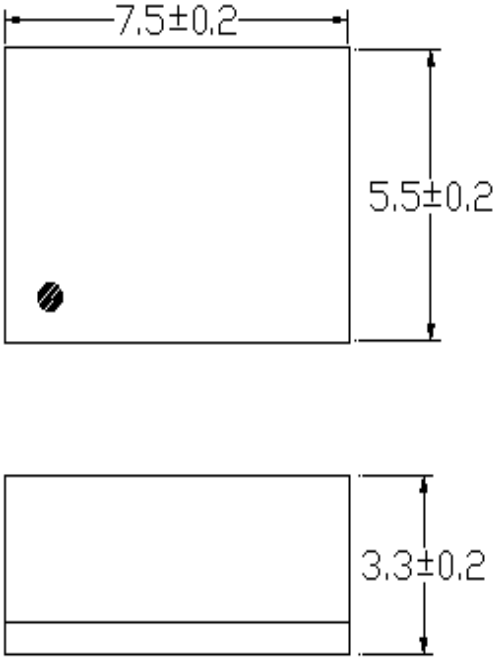

Pin Connections	
PIN	FUNCTION
1,2,3,6,7,8	No Connect
4	GND
5	Output
9	Vcc
10	No Connect or Vc

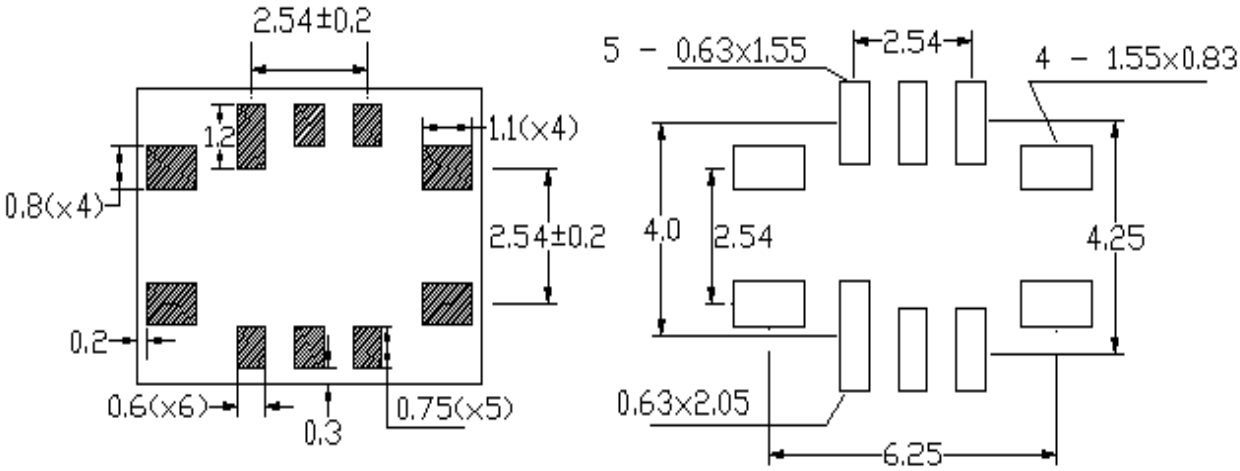

Contacts (pads): ENIG

For Optimum Jitter Performance, Pletronics recommends:

- A ground plane under the device
- Do not route large transient signals (both current and voltage) under the device
- Do not place near a large magnetic field such as a high frequency switching power supply
- Do not place near piezoelectric buzzers or mechanical fans
- Minimize air flow across the device

Pad Layout

Disclaimer: Recommended layout shown. Adjust layout as needed for individual process requirements.

Copyright © 2023, Pletronics Inc. • 19013 36th Ave. W, Lynnwood, WA 98036 USA • www.pletronics.com • 425-776-1880

Maximum Reflow Conditions in accordance with IPC/JEDEC J-STD-020C "Pb-free"

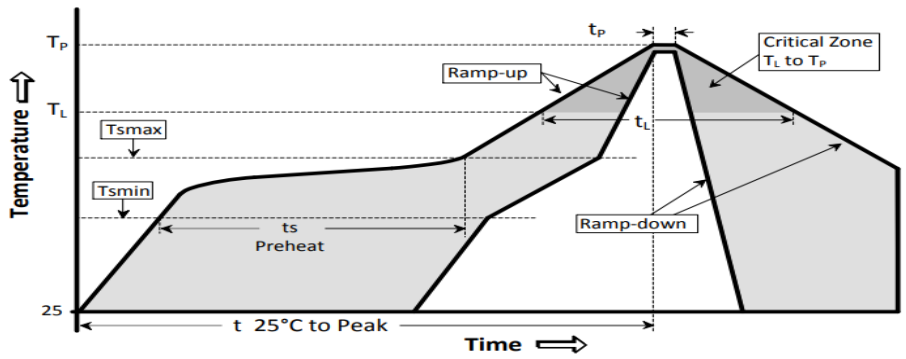

Temperature Profile	Symbol	Condition	Unit
Average ramp-up rate	(Ts_{max} to T_P)	3°C / second max	°C / s
Ramp down Rate	T_{cool}	6°C / second max	°C / s
Time 25°C to Peak Temperature	$T_{to\text{-}peak}$	8 minutes max	min
Preheat			
Temperature min	Ts_{min}	150	°C
Temperature max	Ts_{max}	200	°C
Time Ts_{min} to Ts_{max}	ts	60 – 180	sec
Soldering above liquidus			
Temperature liquidus	T_L	217	°C
Time above liquidus	t_L	60 – 150	sec
Peak temperature			
Peak Temperature	Tp	260	°C
Time within 5°C of peak temperature	tp	20 – 40	sec

The part may be reflowed 2 times without degradation (typical for lead free processing).
NO AQUEOUS WASHING

Tape and Reel

Tape and Reel available for quantities of 250 to 1000 per reel, cut tape for < 250. 16mm tape, 8mm pitch.

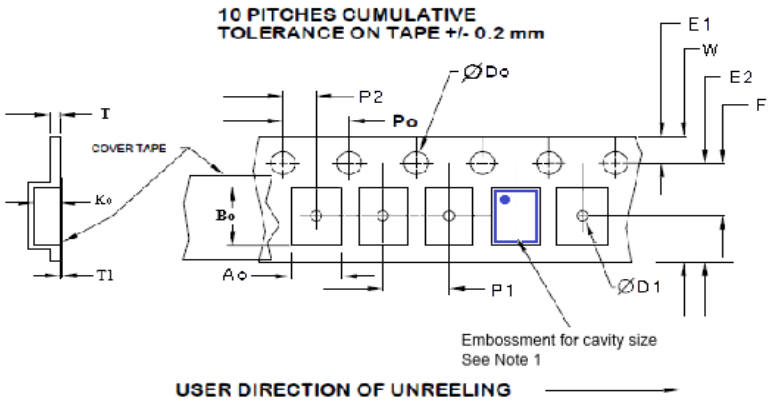

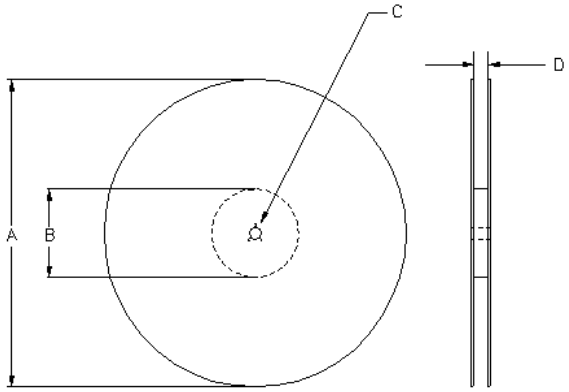

Tape Variable Dimensions Table 2									
Part Size	Tape Size	E2 typ	F	P1	W max	Ao	Bo	Ko	Qty/reel standard
7050	16mm	14.25	7.5 ±0.05	8.0 ±0.1	16.3	6.0 ± 0.2	8.0 ± 0.2	4.0 ± 0.2	1K

Dimensions in mm Drawings Not to scale
Note 1: Embossed cavity to conform to EIA– 481-B

Tape Constant Dimensions Table 1							
Tape Size	Do	D1 typ	E1	Po	P2	T typ	T1 max
16mm	1.5 +0.1 -0.0	1.5	1.75 ±0.1	4.0 ±0.1	2.0 ±0.1	0.3	0.1

Reel Dimensions (may vary) Table 3						
	A		B		C	D
Reel Size	Inches	mm	Inches	mm	mm	mm
13	13.0	330	3.75	95.3	13.0 +0.5 -0.2	Tape size +0.4 +2.0 -0.0

Copyright © 2023, Pletronics Inc. • 19013 36th Ave. W, Lynnwood, WA 98036 USA • www.pletronics.com • 425-776-1880

Important Notice

Pletronics Incorporated (PLE) reserves the right to make corrections, improvements, modifications and other changes to this product at anytime. PLE reserves the right to discontinue any product or service without notice. Customers are responsible for obtaining the latest relevant information before placing orders and should verify that such information is current and complete. All products are sold subject to PLE's terms and conditions of sale supplied at the time of order acknowledgment.

PLE warrants performance of this product to the specifications applicable at the time of sale in accordance with PLE's limited warranty. Testing and other quality control techniques are used to the extent PLE deems necessary to support this warranty. Except where mandated by specific contractual documents, testing of all parameters of each product is not necessarily performed.

PLE assumes no liability for application assistance or customer product design. Customers are responsible for their products and applications using PLE components. To minimize the risks associated with the customer products and applications, customers should provide adequate design and operating safeguards.

PLE products are not designed, intended, authorized or warranted to be suitable for use in life support applications, weapons, weapon systems or space applications, devices or systems or other critical applications that may involve potential risks of death, personal injury or severe property or environmental damage. Inclusion of PLE products in such applications is understood to be fully at the risk of the customer. Use of PLE products in such applications requires the written approval of an appropriate PLE officer. Questions concerning potential risk applications should be directed to PLE.

PLE does not warrant or represent that any license, either express or implied, is granted under any PLE patent right, copyright, artwork or other intellectual property right relating to any combination, machine or process which PLE product or services are used. Information published by PLE regarding third-party products or services does not constitute a license from PLE to use such products or services or a warranty or endorsement thereof. Use of such information may require a license from a third party under the patents or other intellectual property of the third party, or a license from PLE under the patents or other intellectual property of PLE.

Reproduction of information in PLE data sheets or web site is permissible only if the reproduction is without alteration and is accompanied by associated warranties, conditions, limitations and notices. Reproduction of this information with alteration is an unfair and deceptive business practice. PLE is not responsible or liable for such altered documents.

Resale of PLE products or services with statements different from or beyond the parameters stated by PLE for that product or service voids all express and implied warranties for the associated PLE product or service and is an unfair or deceptive business practice. PLE is not responsible for any such statements.

Contacting Pletronics Inc.

Pletronics, Inc.
19013 36th Ave. West
Lynnwood, WA 98036-5761
U.S.A.

Tel: 425.776.1880
Fax: 425.776.2760
email: ple-sales@pletronics.com
URL: www.pletronics.com

Copyright © 2023, Pletronics Inc. • 19013 36th Ave. W, Lynnwood, WA 98036 USA • www.pletronics.com • 425-776-1880