Voltage Detector Series with Programmable Delay

NCP302, NCP303

The NCP302 and NCP303 series are second generation ultra−low current voltage detectors that contain a programmable time delay generator. These devices are specifically designed for use as reset controllers in portable microprocessor based systems where extended battery life is paramount.

Each series features a highly accurate undervoltage detector with hysteresis and an externally programmable time delay generator. This combination of features prevents erratic system reset operation.

The NCP302 series consists of complementary output devices that are available with either an active high or active low reset. The NCP303 series has an open drain N−Channel output with an active low reset output.

Features

- Quiescent Current of 0.5 μA Typical
- High Accuracy Undervoltage Threshold of 2.0%
- Externally Programmable Time Delay Generator
- Wide Operating Voltage Range of 0.8 V to 10 V
- Complementary or Open Drain Output
- Active Low or Active High Reset
- Specified Over the −40°C to +125°C Temperature Range (Except for Voltage Options from 0.9 to 1.1 V)
- NCV Prefix for Automotive and Other Applications Requiring Unique Site and Control Change Requirements; AEC−Q100 Qualified and PPAP Capable
- These Devices are Pb−Free and are RoHS Compliant

Typical Applications

- Microprocessor Reset Controller
- Low Battery Detection
- Power Fail Indicator
- Battery Backup Detection

MARKING DIAGRAM



TSOP−5/ SOT23−5 CASE 483

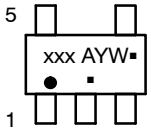

xxx	= Specific Device Code
A	= Assembly Location
Y	= Year
W	= Work Week
▪	= Pb−Free Package

(Note: Microdot may be in either location)

PIN CONNECTIONS

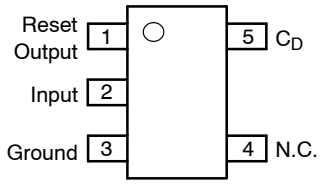

(Top View)

ORDERING INFORMATION

See detailed ordering and shipping information in the ordering information section on page 22 of this data sheet.

© Semiconductor Components Industries, LLC, 2014

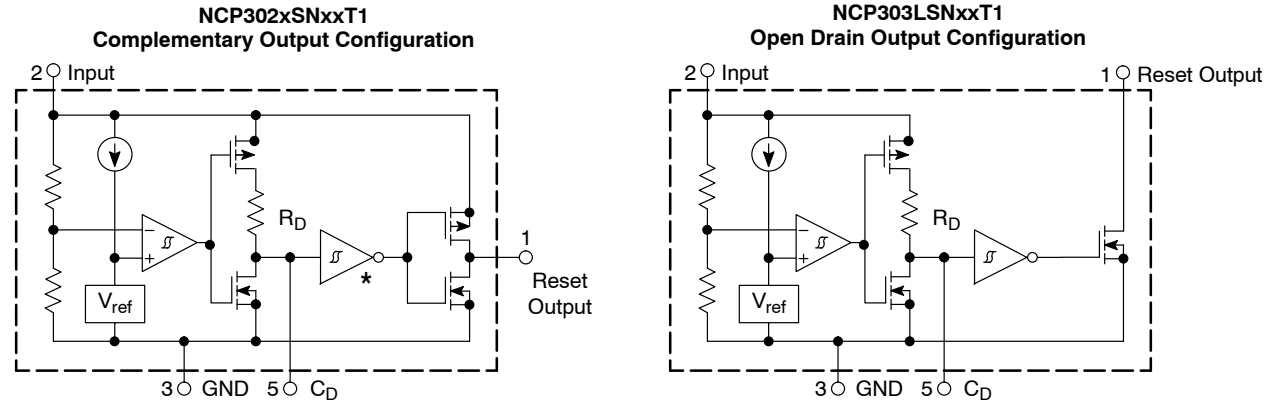

* Inverter for active low devices.
Buffer for active high devices.

This device contains 28 active transistors.

Figure 1. Representative Block Diagrams

MAXIMUM RATINGS

Rating	Symbol	Value	Unit
Input Power Supply Voltage (Pin 2)	V_{in}	12	V
Delay Capacitor Pin Voltage (Pin 5)	V_{CD}	−0.3 to V_{in} + 0.3	V
Output Voltage (Pin 1) Complementary, NCP302 N−Channel Open Drain, NCP303	V_{OUT}	 −0.3 to V_{in} + 0.3 −0.3 to 12	V
Output Current (Pin 1) (Note 2)	I_{OUT}	70	mA
Thermal Resistance Junction−to−Air	$R_{\theta JA}$	250	°C/W
Maximum Junction Temperature	T_J	+150	°C
Operating Ambient Temperature Range All Voltage Options: 0.9 V to 1.1 V All Voltage Options: 1.2 V to 4.9 V	 T_A T_A	 −40 to +85 −40 to +125	 °C °C
Storage Temperature Range	T_{stg}	−55 to +150	°C
Moisture Sensitivity Level	MSL	1	
Latchup Performance (Note 3) Positive Negative	$I_{LATCHUP}$	 200 200	mA

Stresses exceeding those listed in the Maximum Ratings table may damage the device. If any of these limits are exceeded, device functionality should not be assumed, damage may occur and reliability may be affected.

1. This device series contains ESD protection and exceeds the following tests:
   Human Body Model 2000 V per MIL−STD−883, Method 3015.
   Machine Model Method 200 V.
2. The maximum package power dissipation limit must not be exceeded.

$$P_D = \frac{T_{J(max)} - T_A}{R_{\theta JA}}$$

3. Maximum ratings per JEDEC standard JESD78.

ELECTRICAL CHARACTERISTICS (For all values T_A = −40°C to +125°C, unless otherwise noted.)

Characteristic	Symbol	Min	Typ	Max	Unit
NCP302/3 − 0.9 (T_A = 25°C for voltage options from 0.9 to 1.1 V)					
Detector Threshold (Pin 2, V_{in} Decreasing)	V_{DET-}	0.882	0.900	0.918	V
Detector Threshold Hysteresis (Pin 2, V_{in} Increasing)	V_{HYS}	0.027	0.045	0.063	V
Supply Current (Pin 2) (V_{in} = 0.8 V) (V_{in} = 2.9 V)	I_{in}	 – –	 0.20 0.45	 0.6 1.2	μA
Maximum Operating Voltage (Pin 2)	$V_{in(max)}$	–	–	10	V
Minimum Operating Voltage (Pin 2) (T_A = −40°C to 85°C)	$V_{in(min)}$	– –	0.55 0.65	0.70 0.80	V
Reset Output Current (Pin 1, Active Low 'L' Suffix Devices) Nch Sink Current, NCP302, NCP303 (V_{OUT} = 0.05V, V_{in} = 0.70V) (V_{OUT} = 0.50V, V_{in} = 0.85V) Pch Source Current, NCP302 (V_{OUT} = 2.4V, V_{in} = 4.5V)	I_{OUT}	 0.01 0.05 1.0	 0.05 0.50 6.0	 – – –	mA
Reset Output Current (Pin 1, Active High 'H' Suffix Devices) Nch Sink Current, NCP302, NCP303 (V_{OUT} = 0.5 V, V_{in} = 1.5 V) Pch Source Current, NCP302 (V_{OUT} = 0.4 V, V_{in} = 0.7 V) (V_{OUT} = GND, V_{in} = 0.8 V)	I_{OUT}	 1.05 0.011 0.014	 2.5 0.04 0.08	 – – –	mA
C_D Delay Pin Threshold Voltage (Pin 5) (V_{in} = 0.99 V)	V_{TCD}	0.50	0.67	0.84	V
Delay Capacitor Pin Sink Current (Pin 5) (V_{in} = 0.7 V, V_{CD} = 0.1V) (V_{in} = 0.85 V, V_{CD} = 0.5V)	I_{CD}	 2.0 10	 120 300	 – –	μA
Delay Pullup Resistance (Pin 5)	R_D	0.5	1.0	2.0	MΩ
NCP302/3 − 1.8					
Detector Threshold (Pin 2, V_{in} Decreasing) (T_A = 25°C) (T_A = −40°C to 125°C)	V_{DET-}	1.764 1.746	1.800 –	1.836 1.854	V
Detector Threshold Hysteresis (Pin 2, V_{in} Increasing)	V_{HYS}	0.054	0.090	0.126	V
Supply Current (Pin 2) (V_{in} = 1.7 V) (V_{in} = 3.8 V)	I_{in}	 – –	 0.23 0.48	 0.7 1.3	μA
Maximum Operating Voltage (Pin 2)	$V_{in(max)}$	–	–	10	V
Minimum Operating Voltage (Pin 2) (T_A = 25°C) (T_A = −40°C to 125°C)	$V_{in(min)}$	– –	0.55 0.65	0.70 0.80	V
Reset Output Current (Pin 1, Active Low 'L' Suffix Devices) Nch Sink Current, NCP302, NCP303 (V_{OUT} = 0.05V, V_{in} = 0.70V) (V_{OUT} = 0.50V, V_{in} = 1.5V) Pch Source Current, NCP302 (V_{OUT} = 2.4V, V_{in} = 4.5V)	I_{OUT}	 0.01 1.0 1.0	 0.05 2.0 6.0	 – – –	mA
Reset Output Current (Pin 1, Active High 'H' Suffix Devices) Nch Sink Current, NCP302, NCP303 (V_{OUT} = 0.5 V, V_{in} = 5.0 V) Pch Source Current, NCP302 (V_{OUT} = 0.4 V, V_{in} = 0.7 V) (V_{OUT} = GND, V_{in} = 1.5 V)	I_{OUT}	 6.3 0.011 0.525	 11 0.04 0.6	 – – –	mA
C_D Delay Pin Threshold Voltage (Pin 5) (V_{in} = 1.98 V)	V_{TCD}	0.99	1.34	1.68	V

ELECTRICAL CHARACTERISTICS (continued) (For all values T_A = −40°C to +125°C, unless otherwise noted.)

Characteristic	Symbol	Min	Typ	Max	Unit
NCP302/3 – 1.8					
Delay Capacitor Pin Sink Current (Pin 5) (V_{in} = 0.7 V, V_{CD} = 0.1V) (V_{in} = 1.5 V, V_{CD} = 0.5V)	I_{CD}	 2.0 200	 120 1600	 – –	μA
Delay Pullup Resistance (Pin 5)	R_D	0.5	1.0	2.0	MΩ
NCP302/3 – 2.0					
Detector Threshold (Pin 2, V_{in} Decreasing) (T_A = 25°C) (T_A = −40°C to 125°C)	V_{DET-}	1.96 1.94	2.00 –	2.04 2.06	V
Detector Threshold Hysteresis (Pin 2, V_{in} Increasing)	V_{HYS}	0.06	0.10	0.14	V
Supply Current (Pin 2) (V_{in} = 1.9 V) (V_{in} = 4.0 V)	I_{in}	 – –	 0.23 0.48	 0.8 1.3	μA
Maximum Operating Voltage (Pin 2)	$V_{in(max)}$	–	–	10	V
Minimum Operating Voltage (Pin 2) (T_A = 25°C) (T_A = −40°C to 125°C)	$V_{in(min)}$	– –	0.55 0.65	0.70 0.80	V
Reset Output Current (Pin 1, Active Low 'L' Suffix Devices) Nch Sink Current, NCP302, NCP303 (V_{OUT} = 0.05V, V_{in} = 0.70V) (V_{OUT} = 0.50V, V_{in} = 1.5V) Pch Source Current, NCP302 (V_{OUT} = 2.4V, V_{in} = 4.5V)	I_{OUT}	 0.01 1.0 1.0	 0.14 3.5 9.7	 – – –	mA
Reset Output Current (Pin 1, Active High 'H' Suffix Devices) Nch Sink Current, NCP302, NCP303 (V_{OUT} = 0.5 V, V_{in} = 5.0 V) Pch Source Current, NCP302 (V_{OUT} = 0.4 V, V_{in} = 0.7 V) (V_{OUT} = GND, V_{in} = 1.5 V)	I_{OUT}	 6.3 0.011 0.525	 11 0.04 0.6	 – – –	mA
C_D Delay Pin Threshold Voltage (Pin 5) (V_{in} = 2.2 V)	V_{TCD}	 1.10	 1.49	 1.87	V
Delay Capacitor Pin Sink Current (Pin 5) (V_{in} = 0.7 V, V_{CD} = 0.1V) (V_{in} = 1.5 V, V_{CD} = 0.5V)	I_{CD}	 2.0 200	 250 3600	 – –	μA
Delay Pullup Resistance (Pin 5)	R_D	0.5	1.0	2.0	MΩ
NCP302/3– 2.7					
Detector Threshold (Pin 2, V_{in} Decreasing) (T_A = 25°C) (T_A = −40°C to 125°C)	V_{DET-}	2.646 2.619	2.700 –	2.754 2.781	V
Detector Threshold Hysteresis (Pin 2, V_{in} Increasing)	V_{HYS}	0.081	0.135	0.189	V
Supply Current (Pin 2) (V_{in} = 2.6 V) (V_{in} = 4.7 V)	I_{in}	 – –	 0.25 0.50	 0.8 1.3	μA
Maximum Operating Voltage (Pin 2)	$V_{in(max)}$	–	–	10	V
Minimum Operating Voltage (Pin 2) (T_A = 25°C) (T_A = −40°C to 125°C)	$V_{in(min)}$	– –	0.55 0.65	0.70 0.80	V
Reset Output Current (Pin 1, Active Low 'L' Suffix Devices) Nch Sink Current, NCP302, NCP303 (V_{OUT} = 0.05V, V_{in} = 0.70V) (V_{OUT} = 0.50V, V_{in} = 1.5V) Pch Source Current, NCP302 (V_{OUT} = 2.4V, V_{in} = 4.5V)	I_{OUT}	 0.01 1.0 1.0	 0.14 3.5 9.7	 – – –	mA
Reset Output Current (Pin 1, Active High 'H' Suffix Devices) Nch Sink Current, NCP302, NCP303 (V_{OUT} = 0.5 V, V_{in} = 5.0 V)	I_{OUT}	 6.3	 11	 –	mA

ELECTRICAL CHARACTERISTICS (continued) (For all values T_A = −40°C to +125°C, unless otherwise noted.)

Characteristic	Symbol	Min	Typ	Max	Unit
NCP302/3– 2.7					
Pch Source Current, NCP302 (V_{OUT} = 0.4 V, V_{in} = 0.7 V) (V_{OUT} = GND, V_{in} = 1.5 V)		 0.011 0.525	 0.04 0.6	 – –	
C_D Delay Pin Threshold Voltage (Pin 5) (V_{in} = 2.97 V)	V_{TCD}	 1.49	 2.01	 2.53	V
Delay Capacitor Pin Sink Current (Pin 5) (V_{in} = 0.7 V, V_{CD} = 0.1V) (V_{in} = 1.5 V, V_{CD} = 0.5V)	I_{CD}	 2.0 200	 250 3600	 – –	μA
Delay Pullup Resistance (Pin 5)	R_D	0.5	1.0	2.0	MΩ
NCP302/3 – 3.0					
Detector Threshold (Pin 2, V_{in} Decreasing) (T_A = 25°C) (T_A = −40°C to 125°C)	V_{DET-}	2.94 2.91	3.00 –	3.06 3.09	V
Detector Threshold Hysteresis (Pin 2, V_{in} Increasing)	V_{HYS}	0.09	0.15	0.21	V
Supply Current (Pin 2) (V_{in} = 2.87 V) (V_{in} = 5.0 V)	I_{in}	 – –	 0.25 0.50	 0.9 1.3	μA
Maximum Operating Voltage (Pin 2)	$V_{in(max)}$	–	–	10	V
Minimum Operating Voltage (Pin 2) (T_A = 25°C) (T_A = −40°C to 125°C)	$V_{in(min)}$	– –	0.55 0.65	0.70 0.80	V
Reset Output Current (Pin 1, Active Low 'L' Suffix Devices) Nch Sink Current, NCP302, NCP303 (V_{OUT} = 0.05V, V_{in} = 0.70V) (V_{OUT} = 0.50V, V_{in} = 1.5V) Pch Source Current, NCP302 (V_{OUT} = 2.4V, V_{in} = 4.5V)	I_{OUT}	 0.01 1.0 1.0	 0.14 3.5 9.7	 – – –	mA
Reset Output Current (Pin 1, Active High 'H' Suffix Devices) Nch Sink Current, NCP302, NCP303 (V_{OUT} = 0.5 V, V_{in} = 5.0 V) Pch Source Current, NCP302 (V_{OUT} = 0.4 V, V_{in} = 0.7 V) (V_{OUT} = GND, V_{in} = 1.5 V)	I_{OUT}	 6.3 0.011 0.525	 11 0.04 0.6	 – – –	mA
C_D Delay Pin Threshold Voltage (Pin 5) (V_{in} = 3.3 V)	V_{TCD}	 1.65	 2.23	 2.81	V
Delay Capacitor Pin Sink Current (Pin 5) (V_{in} = 0.7 V, V_{CD} = 0.1V) (V_{in} = 1.5 V, V_{CD} = 0.5V)	I_{CD}	 2.0 200	 250 3600	 – –	μA
Delay Pullup Resistance (Pin 5)	R_D	0.5	1.0	2.0	MΩ
NCP302/3 – 4.5					
Detector Threshold (Pin 2, V_{in} Decreasing) (T_A = 25°C) (T_A = −40°C to 125°C)	V_{DET-}	4.410 4.365	4.500 –	4.590 4.635	V
Detector Threshold Hysteresis (Pin 2, V_{in} Increasing)	V_{HYS}	0.135	0.225	0.315	V
Supply Current (Pin 2) (V_{in} = 4.34 V) (V_{in} = 6.5 V)	I_{in}	 – –	 0.33 0.52	 1.0 1.4	μA
Maximum Operating Voltage (Pin 2)	$V_{in(max)}$	–	–	10	V
Minimum Operating Voltage (Pin 2) (T_A = 25°C) (T_A = −40°C to 125°C)	$V_{in(min)}$	– –	0.55 0.65	0.70 0.80	V
Reset Output Current (Pin 1, Active Low 'L' Suffix Devices) Nch Sink Current, NCP302, NCP303 (V_{OUT} = 0.05V, V_{in} = 0.70V) (V_{OUT} = 0.50V, V_{in} = 1.5V)	I_{OUT}	 0.01 1.0	 0.05 2.0	 – –	mA

ELECTRICAL CHARACTERISTICS (continued) (For all values T_A = −40°C to +125°C, unless otherwise noted.)

Characteristic	Symbol	Min	Typ	Max	Unit
NCP302/3 − 4.5					
Pch Source Current, NCP302 (V_{OUT} = 5.9V, V_{in} = 8.0V)		1.5	10.5	−	
Reset Output Current (Pin 1, Active High 'H' Suffix Devices)	I_{OUT}				mA
Nch Sink Current, NCP302, NCP303 (V_{OUT} = 0.5 V, V_{in} = 5.0 V)		6.3	11	−	
Pch Source Current, NCP302 (V_{OUT} = 0.4 V, V_{in} = 0.7 V) (V_{OUT} = GND, V_{in} = 1.5 V)		0.011 0.525	0.04 0.6	− −	
C_D Delay Pin Threshold Voltage (Pin 5) (V_{in} = 4.95 V)	V_{TCD}	2.25	3.04	3.83	V
Delay Capacitor Pin Sink Current (Pin 5) (V_{in} = 0.7 V, V_{CD} = 0.1V) (V_{in} = 1.5 V, V_{CD} = 0.5V)	I_{CD}	2.0 200	120 1600	− −	μA
Delay Pullup Resistance (Pin 5)	R_D	0.5	1.0	2.0	MΩ
NCP302/3 − 4.7					
Detector Threshold (Pin 2, V_{in} Decreasing) (T_A = 25°C) (T_A = −40°C to 125°C)	V_{DET-}	4.606 4.559	4.700 −	4.794 4.841	V
Detector Threshold Hysteresis (Pin 2, V_{in} Increasing)	V_{HYS}	0.141	0.235	0.329	V
Supply Current (Pin 2) (V_{in} = 4.54 V) (V_{in} = 6.7 V)	I_{in}	− −	0.34 0.53	1.0 1.4	μA
Maximum Operating Voltage (Pin 2)	$V_{in(max)}$	−	−	10	V
Minimum Operating Voltage (Pin 2) (T_A = 25°C) (T_A = −40°C to 125°C)	$V_{in(min)}$	− −	0.55 0.65	0.70 0.80	V
Reset Output Current (Pin 1, Active Low 'L' Suffix Devices)	I_{OUT}				mA
Nch Sink Current, NCP302, NCP303 (V_{OUT} = 0.05V, V_{in} = 0.70V) (V_{OUT} = 0.50V, V_{in} = 1.5V)		0.01 1.0	0.05 2.0	− −	
Pch Source Current, NCP302 (V_{OUT} = 5.9V, V_{in} = 8.0V)		1.5	10.5	−	
Reset Output Current (Pin 1, Active High 'H' Suffix Devices)	I_{OUT}				mA
Nch Sink Current, NCP302, NCP303 (V_{OUT} = 0.5 V, V_{in} = 5.0 V)		6.3	11	−	
Pch Source Current, NCP302 (V_{OUT} = 0.4 V, V_{in} = 0.7 V) (V_{OUT} = GND, V_{in} = 1.5 V)		0.011 0.525	0.04 0.6	− −	
C_D Delay Pin Threshold Voltage (Pin 5) (V_{in} = 5.17 V)	V_{TCD}	2.59	3.49	4.40	V
Delay Capacitor Pin Sink Current (Pin 5) (V_{in} = 0.7 V, V_{CD} = 0.1V) (V_{in} = 1.5 V, V_{CD} = 0.5V)	I_{CD}	2.0 200	120 1600	− −	μA
Delay Pullup Resistance (Pin 5)	R_D	0.5	1.0	2.0	MΩ

Product parametric performance is indicated in the Electrical Characteristics for the listed test conditions, unless otherwise noted. Product performance may not be indicated by the Electrical Characteristics if operated under different conditions.

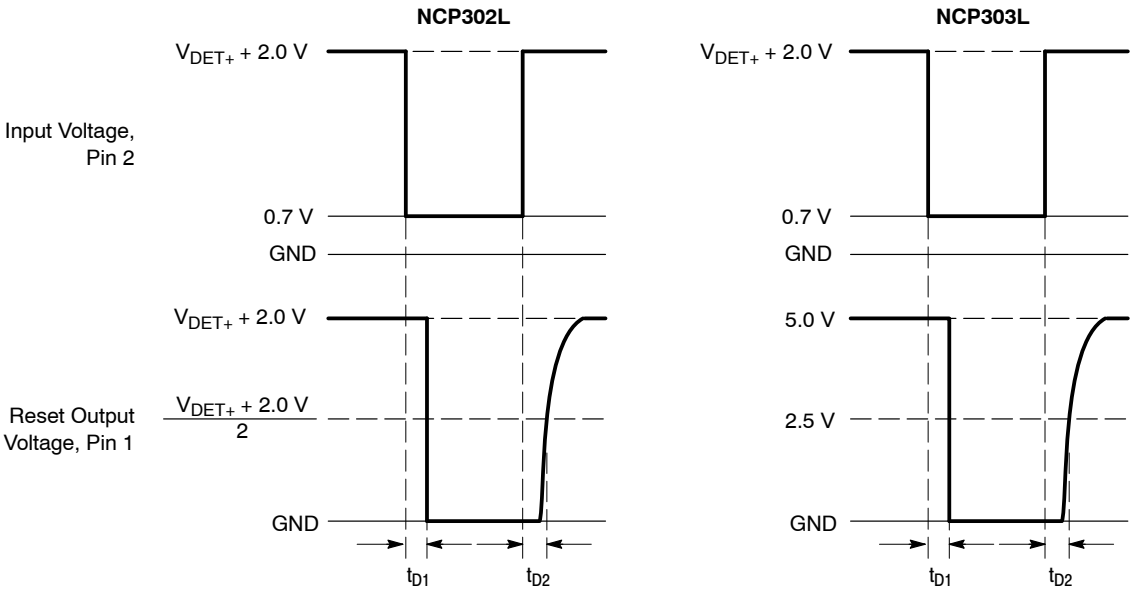

NCP302 and NCP303 series are measured with a 10 pF capacitive load. NCP303 has an additional 470 k pullup resistor connected from the reset output to +5.0 V. The reset output voltage waveforms are shown for the active low 'L' devices. Output time delay t_{D1} and t_{D2} are dependent upon the delay capacitance. Refer to Figures 30, 31, and 32. The upper detector threshold, V_{DET+} is the sum of the lower detector threshold, V_{DET-} plus the input hysteresis, V_{HYS}.

Figure 2. Measurement Conditions for t_{D1} and t_{D2}

Table 1. ELECTRICAL CHARACTERISTIC TABLE FOR 0.9 – 4.9 V

NCP302 Series	Detector Threshold			Detector Threshold Hysteresis			Supply Current		Nch Sink Current		Pch Source Current
							V_{in} Low	V_{in} High	V_{in} Low	V_{in} High	
	V_{DET-} (V) (Note 4)			V_{HYS} (V)			I_{in} (μA) (Note 5)	I_{in} (μA) (Note 6)	I_{OUT} (mA) (Note 7)	I_{OUT} (mA) (Note 8)	I_{OUT}(mA) (Note 9)
Part Number	Min	Typ	Max	Min	Typ	Max	Typ	Typ	Typ	Typ	Typ
NCP302LSN09T1	0.882	0.9	0.918	0.027	0.045	0.063	0.20	0.45	0.05	0.5	2.0
NCP302LSN15T1	1.470	1.5	1.530	0.045	0.075	0.105					
NCP302LSN18T1	1.764	1.8	1.836	0.054	0.090	0.126	0.23	0.48			
NCP302LSN20T1	1.960	2.0	2.040	0.060	0.100	0.140					
NCP302LSN27T1	2.646	2.7	2.754	0.081	0.135	0.189	0.25	0.50			
NCP302LSN30T1,	2.940	3.0	3.060	0.090	0.150	0.210					
NCV302LSN30T1,	2.940	3.0	3.060	0.090	0.150	0.210					
NCP302LSN33T1	3.234	3.3	3.366	0.099	0.165	0.231					
NCP302LSN38T1	3.724	3.8	3.876	0.114	0.190	0.266					
NCP302LSN40T1	3.920	4.0	4.080	0.120	0.200	0.280					3.0
NCP302LSN43T1	4.214	4.3	4.386	0.129	0.215	0.301					
NCP302LSN45T1	4.410	4.5	4.590	0.135	0.225	0.315	0.33	0.52			
NCP302LSN47T1	4.606	4.7	4.794	0.141	0.235	0.329	0.34	0.53			

4. Values shown apply at +25°C only. For voltage options greater than 1.1 V, V_{DET-} limits over operating temperature range (−40°C to +125°C) are V_{NOM} ±3%. For voltage options < 1.2 V, V_{DET-} is guaranteed only at +25°C.
5. Condition 1: 0.9 — 2.9 V, $V_{in} = V_{DET-} - 0.10$ V; 3.0 — 3.9 V, $V_{in} = V_{DET-} - 0.13$ V; 4.0 — 4.9 V, $V_{in} = V_{DET-} - 0.16$ V
6. Condition 2: 0.9 — 4.9 V, $V_{in} = V_{DET-} + 2.0$ V
7. Condition 3: 0.9 — 4.9 V, V_{in} = 0.7 V, V_{OUT} = 0.05 V, Active Low ‘L’ Suffix Devices
8. Condition 4: 0.9 — 1.0 V, V_{in} = 0.85 V, V_{OUT} = 0.5 V; 1.1 — 1.5 V, V_{in} = 1.0 V, V_{OUT} = 0.5 V; 1.6 — 4.9 V, V_{in} = 1.5 V, V_{OUT} = 0.5 V, Active Low ‘L’ Suffix Devices
9. Condition 5: 0.9 — 3.9 V, V_{in} = 4.5 V, V_{OUT} = 2.4 V; 4.0 — 4.9 V, V_{in} = 8.0 V, V_{OUT} = 5.9 V, Active Low ‘L’ Suffix Devices

Table 2. ELECTRICAL CHARACTERISTIC TABLE FOR 0.9 – 4.9 V

NCP302 Series	Detector Threshold			Detector Threshold Hysteresis			Supply Current		Nch Sink Current	Pch Source Current	
							V_{in} Low	V_{in} High		V_{in} Low	V_{in} High
	V_{DET-} (V) (Note 10)			V_{HYS} (V)			I_{in} (μA) (Note 11)	I_{in} (μA) (Note 12)	I_{OUT} (mA) (Note 13)	I_{OUT} (mA) (Note 14)	I_{OUT} (mA) (Note 15)
Part Number	Min	Typ	Max	Min	Typ	Max	Typ	Typ	Typ	Typ	Typ
NCP302HSN09T1	0.882	0.9	0.918	0.027	0.045	0.063	0.20	0.45	2.5	0.04	0.08
NCP302HSN18T1	1.764	1.8	1.836	0.054	0.090	0.126	0.23	0.48			
NCP302HSN27T1	2.646	2.7	2.754	0.081	0.135	0.189	0.25	0.50			
NCP302HSN30T1	2.940	3.0	3.060	0.090	0.150	0.210					
NCP302HSN40T1	3.920	4.0	4.080	0.120	0.200	0.280					
NCP302HSN45T1	4.410	4.5	4.590	0.135	0.225	0.315	0.33	0.52			

10. Values shown apply at +25°C only. For voltage options greater than 1.1 V, V_{DET-} limits over operating temperature range (−40°C to +125°C) are V_{NOM} ±3%. For voltage options < 1.2 V, V_{DET-} is guaranteed only at +25°C.
11. Condition 1: 0.9 — 2.9 V, $V_{in} = V_{DET-} - 0.10$ V; 3.0 — 3.9 V, $V_{in} = V_{DET-} - 0.13$ V; 4.0 — 4.9 V, $V_{in} = V_{DET-} - 0.16$ V
12. Condition 2: 0.9 — 4.9 V, $V_{in} = V_{DET-} + 2.0$ V
13. Condition 3: 0.9 — 1.4 V, V_{in} = 1.5 V, V_{OUT} = 0.5 V; 1.5 — 4.9 V, V_{in} = 5.0 V, V_{OUT} = 0.5 V, Active High ‘H’ Suffix Devices
14. Condition 4: 0.9 — 4.9 V, V_{in} = 0.7 V, V_{OUT} = 0.4 V, Active High ‘H’ Suffix Devices
15. Condition 5: 0.9 — 1.0 V, V_{in} = 0.8 V, V_{OUT} = GND; 1.1 — 1.5 V, V_{in} = 1.0 V, V_{OUT} = GND; 1.6 — 4.9 V, V_{in} = 1.5 V, V_{OUT} = GND, Active High ‘H’ Suffix Devices

Table 3. ELECTRICAL CHARACTERISTIC TABLE FOR 0.9 – 4.9 V

NCP303 Series	Detector Threshold			Detector Threshold Hysteresis			Supply Current		Nch Sink Current	
							V_{in} Low	V_{in} High	V_{in} Low	V_{in} High
	V_{DET-} (V) (Note 16)			V_{HYS} (V)			I_{in} (μA) (Note 17)	I_{in} (μA) (Note 18)	I_{OUT} (mA) (Note 19)	I_{OUT} (mA) (Note 20)
Part Number	Min	Typ	Max	Min	Typ	Max	Typ	Typ	Typ	Typ
NCP303LSN09T1	0.882	0.9	0.918	0.027	0.045	0.063	0.20	0.45	0.05	0.5
NCP303LSN10T1	0.980	1.0	1.020	0.030	0.050	0.070				
NCP303LSN11T1	1.078	1.1	1.122	0.033	0.055	0.077				1.0
NCP303LSN13T1	1.274	1.3	1.326	0.039	0.065	0.091				
NCP303LSN14T1	1.372	1.4	1.428	0.042	0.070	0.098				
NCP303LSN15T1	1.470	1.5	1.530	0.045	0.075	0.105				
NCP303LSN16T1	1.568	1.6	1.632	0.048	0.080	0.112				2.0
NCP303LSN17T1	1.666	1.7	1.734	0.051	0.085	0.119				
NCP303LSN18T1	1.764	1.8	1.836	0.054	0.090	0.126	0.23	0.48		
NCP303LSN20T1	1.960	2.0	2.040	0.060	0.100	0.140				
NCP303LSN22T1	2.156	2.2	2.244	0.066	0.110	0.154				
NCP303LSN23T1	2.254	2.3	2.346	0.069	0.115	0.161				
NCP303LSN24T1	2.352	2.4	2.448	0.072	0.120	0.168				
NCP303LSN25T1	2.450	2.5	2.550	0.075	0.125	0.175				
NCP303LSN26T1	2.548	2.6	2.652	0.078	0.130	0.182				
NCP303LSN27T1	2.646	2.7	2.754	0.081	0.135	0.189	0.25	0.50		
NCP303LSN28T1	2.744	2.8	2.856	0.084	0.140	0.196				
NCP303LSN29T1	2.842	2.9	2.958	0.087	0.145	0.203				
NCP303LSN30T1	2.940	3.0	3.060	0.090	0.150	0.210				
NCP303LSN31T1	3.038	3.1	3.162	0.093	0.155	0.217				
NCP303LSN32T1	3.136	3.2	3.264	0.096	0.160	0.224				
NCP303LSN33T1	3.234	3.3	3.366	0.099	0.165	0.231				
NCP303LSN34T1	3.332	3.4	3.468	0.102	0.170	0.238				
NCP303LSN36T1	3.528	3.6	3.672	0.108	0.180	0.252				
NCP303LSN38T1	3.724	3.8	3.876	0.114	0.190	0.266				
NCP303LSN40T1	3.920	4.0	4.080	0.120	0.200	0.280				
NCP303LSN42T1	4.116	4.2	4.284	0.126	0.210	0.294				
NCP303LSN44T1	4.312	4.4	4.488	0.132	0.220	0.308				
NCP303LSN45T1	4.410	4.5	4.590	0.135	0.225	0.315	0.33	0.52		
NCP303LSN46T1	4.508	4.6	4.692	0.138	0.230	0.322				
NCP303LSN47T1	4.606	4.7	4.794	0.141	0.235	0.329	0.34	0.53		
NCP303LSN49T1	4.802	4.9	4.998	0.147	0.245	0.343				

16. Values shown apply at +25°C only. For voltage options greater than 1.1 V, V_{DET-} limits over operating temperature range (−40°C to +125°C) are V_{NOM} ±3%. For voltage options < 1.2 V, V_{DET-} is guaranteed only at +25°C.
17. Condition 1: 0.9 — 2.9 V, $V_{in} = V_{DET-} - 0.10$ V; 3.0 — 3.9 V, $V_{in} = V_{DET-} - 0.13$ V; 4.0 — 4.9 V, $V_{in} = V_{DET-} - 0.16$ V
18. Condition 2: 0.9 — 4.9 V, $V_{in} = V_{DET-} + 2.0$ V
19. Condition 3: 0.9 — 4.9 V, V_{in} = 0.7 V, V_{OUT} = 0.05 V, Active Low ‘L’ Suffix Devices
20. Condition 4: 0.9 — 1.0 V, V_{in} = 0.85 V, V_{OUT} = 0.5 V; 1.1 — 1.5 V, V_{in} = 1.0 V, V_{OUT} = 0.5 V; 1.6 — 4.9 V, V_{in} = 1.5 V, V_{OUT} = 0.5 V, Active Low ‘L’ Suffix Devices

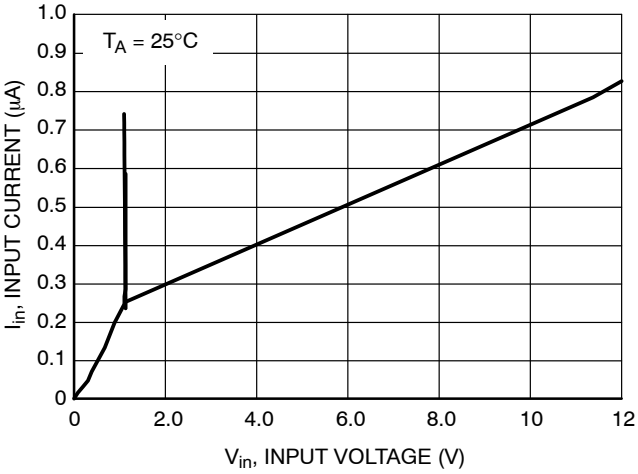

Figure 3. NCP302/3 Series 0.9 V Input Current vs. Input Voltage

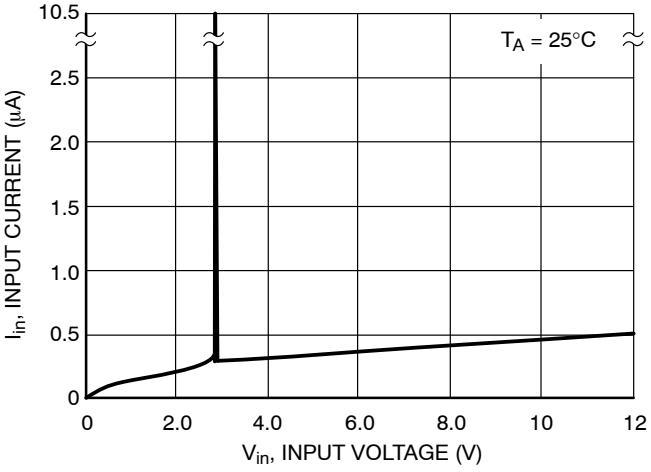

Figure 4. NCP302/3 Series 2.7 V Input Current vs. Input Voltage

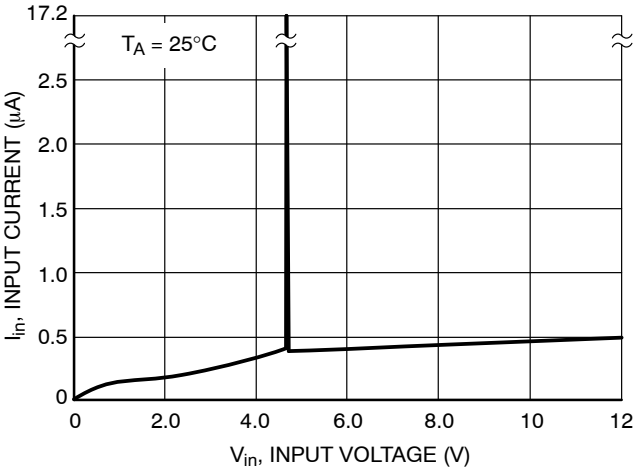

Figure 5. NCP302/3 Series 4.5 V Input Current vs. Input Voltage

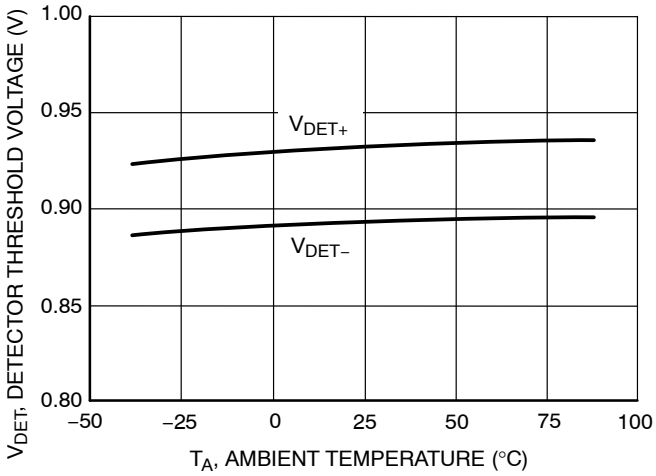

Figure 6. NCP302/3 Series 0.9 V Detector Threshold Voltage vs. Temperature

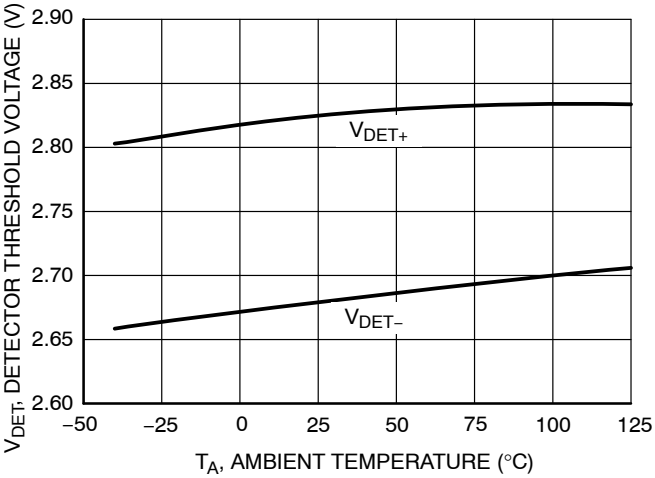

Figure 7. NCP302/3 Series 2.7 V Detector Threshold Voltage vs. Temperature

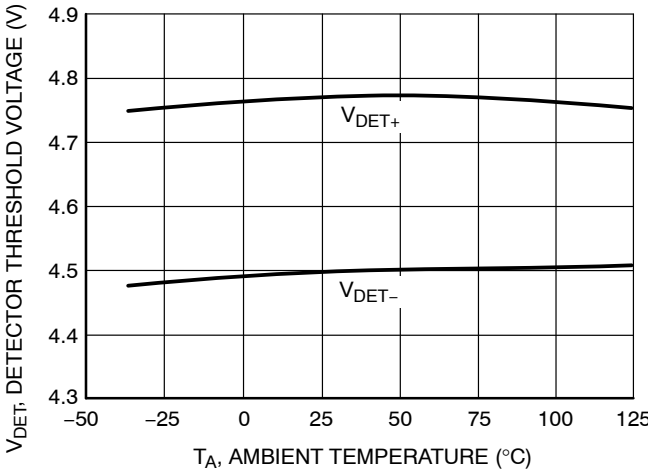

Figure 8. NCP302/3 Series 4.5 V Detector Threshold Voltage vs. Temperature

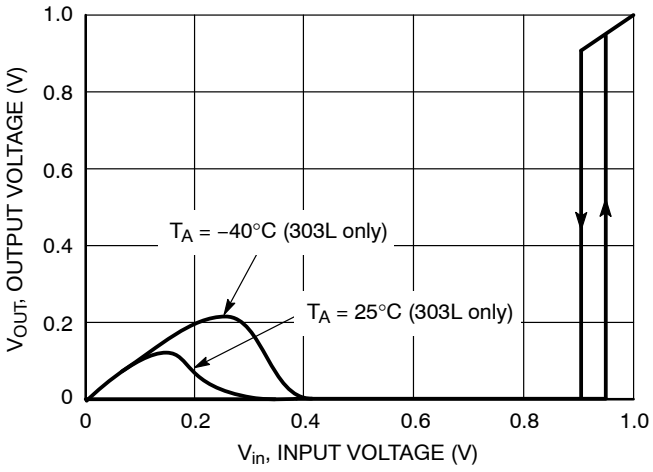

Figure 9. NCP302L/3L Series 0.9 V Reset Output Voltage vs. Input Voltage

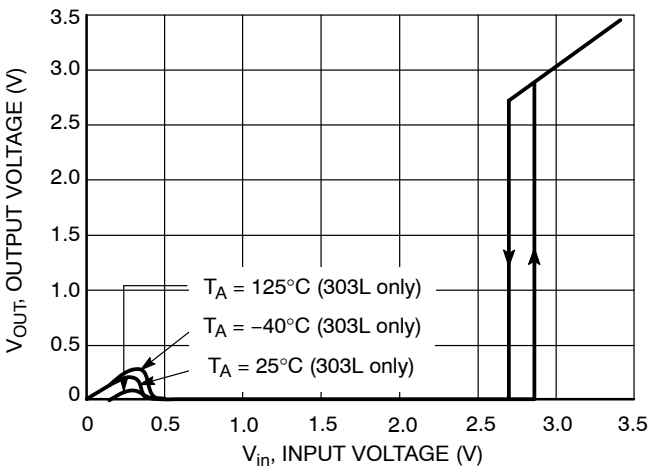

Figure 10. NCP302L/3L Series 2.7 V Reset Output Voltage vs. Input Voltage

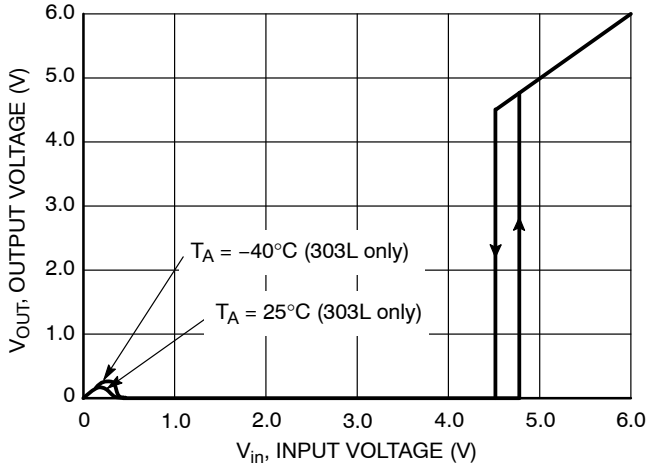

Figure 11. NCP302L/3L Series 4.5 V Reset Output Voltage vs. Input Voltage

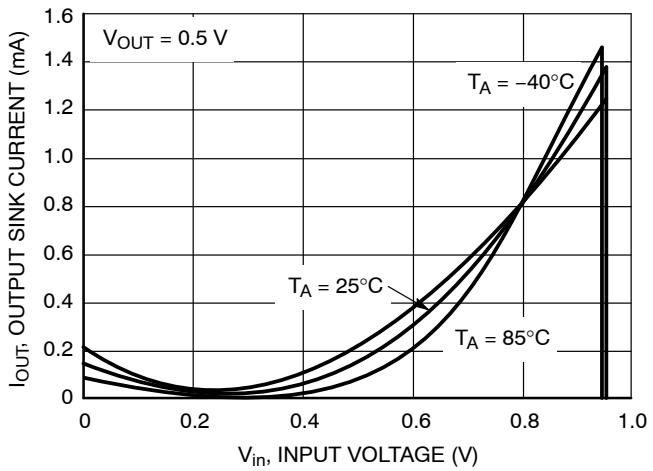

Figure 12. NCP302H/3L Series 0.9 V Reset Output Sink Current vs. Input Voltage

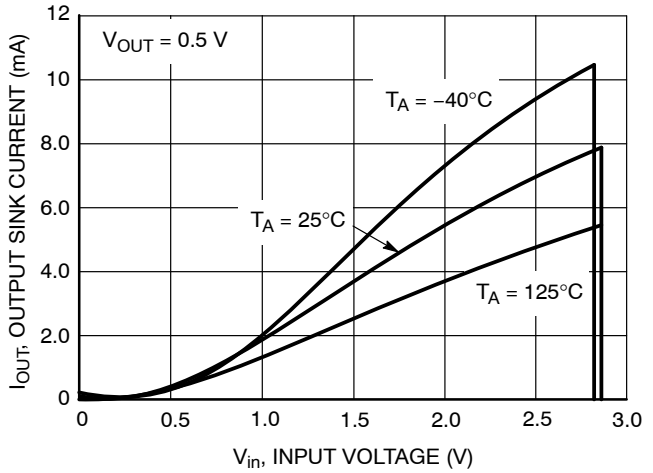

Figure 13. NCP302H/3L Series 2.7 V Reset Output Sink Current vs. Input Voltage

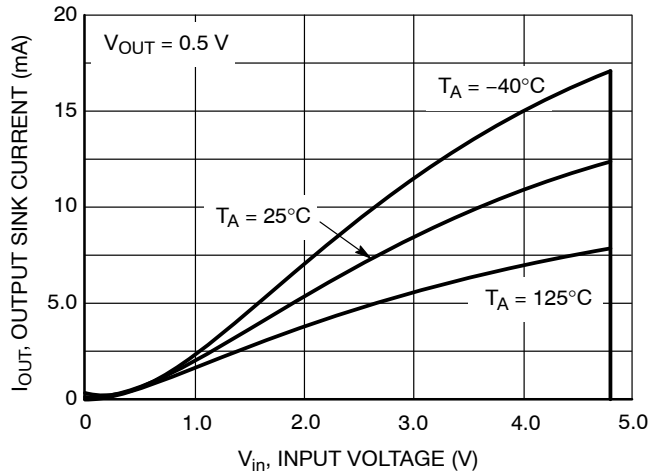

Figure 14. NCP302H/3L Series 4.5 V Reset Output Sink Current vs. Input Voltage

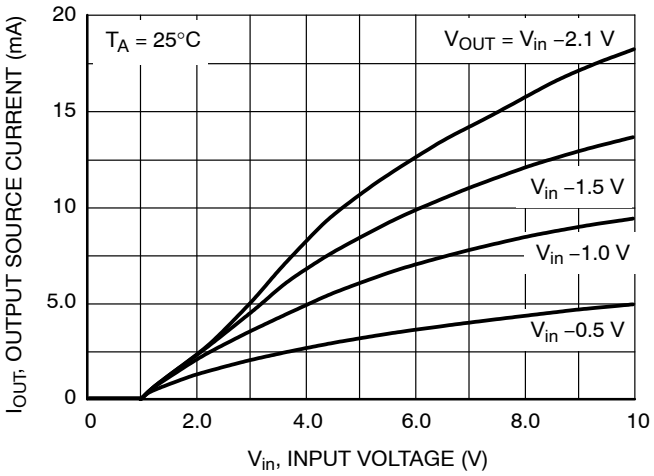

Figure 15. NCP302L Series 0.9 V Reset Output Source Current vs. Input Voltage

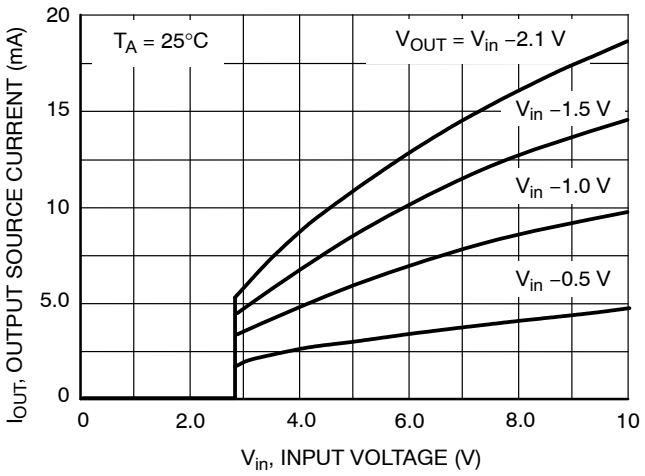

Figure 16. NCP302L Series 2.7 V Reset Output Source Current vs. Input Voltage

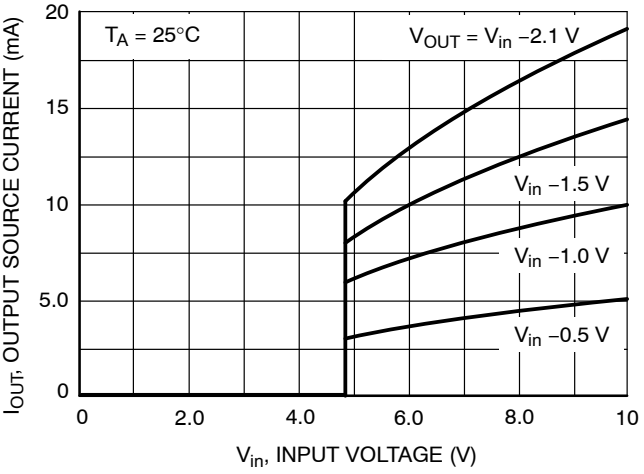

Figure 17. NCP302L Series 4.5 V Reset Output Source Current vs. Input Voltage

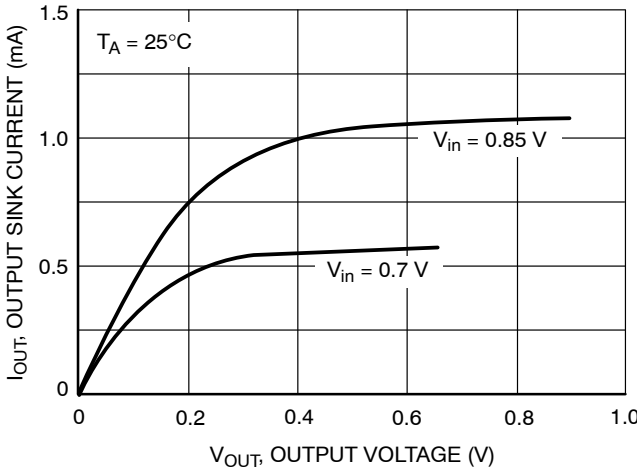

Figure 18. NCP302H/3L Series 0.9 V Reset Output Sink Current vs. Output Voltage

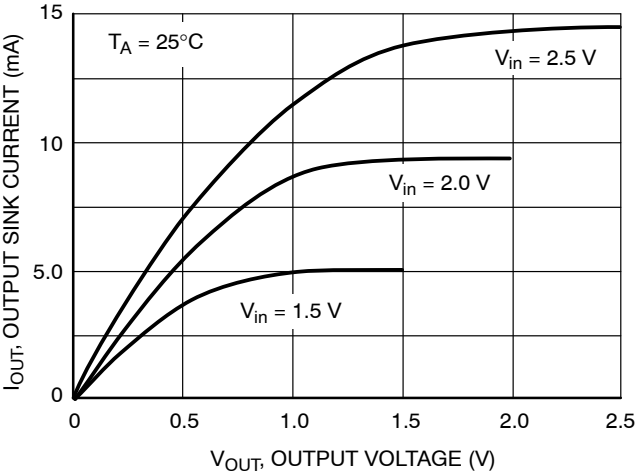

Figure 19. NCP302H/3L Series 2.7 V Reset Output Sink Current vs. Output Voltage

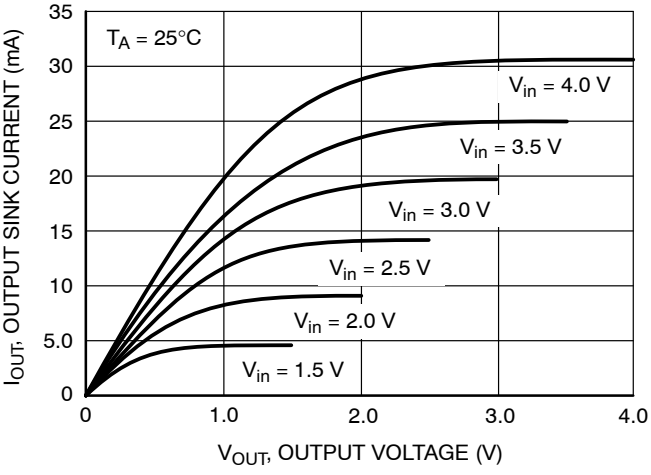

Figure 20. NCP302H/3L Series 4.5 V Reset Output Sink Current vs. Output Voltage

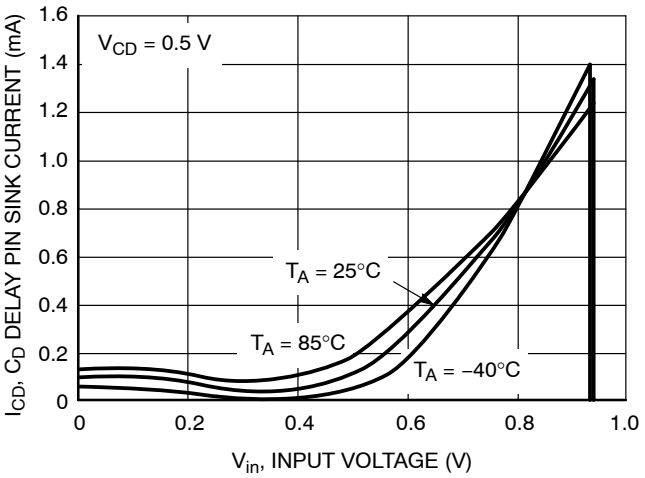

Figure 21. NCP302/3 Series 0.9 V C_D Delay Pin Sink Current vs. Input Voltage

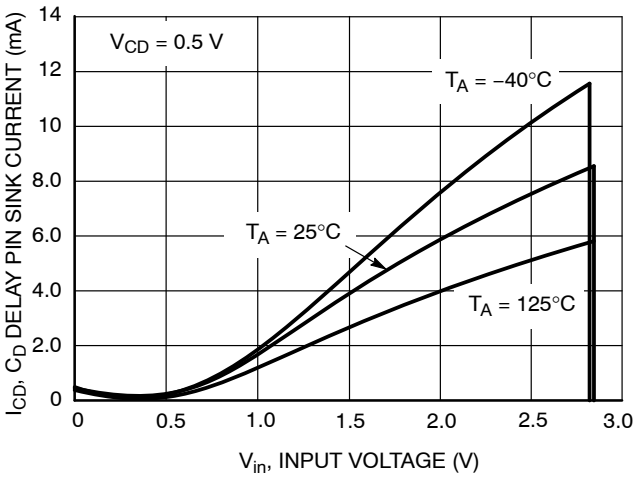

Figure 22. NCP302/3 Series 2.7 V C_D Delay Pin Sink Current vs. Input Voltage

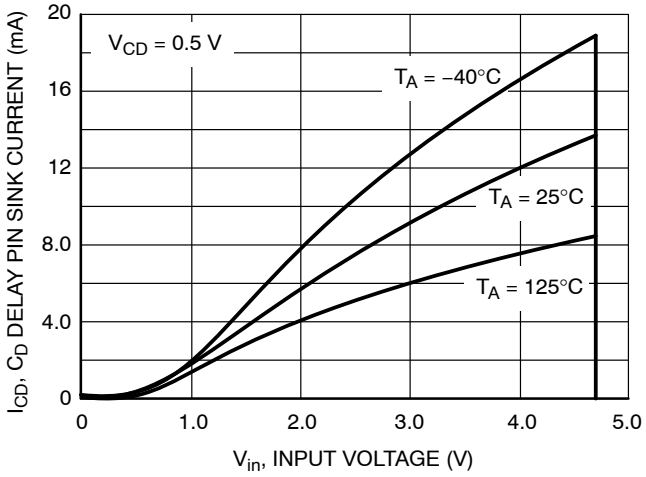

Figure 23. NCP302/3 Series 4.5 V C_D Delay Pin Sink Current vs. Input Voltage

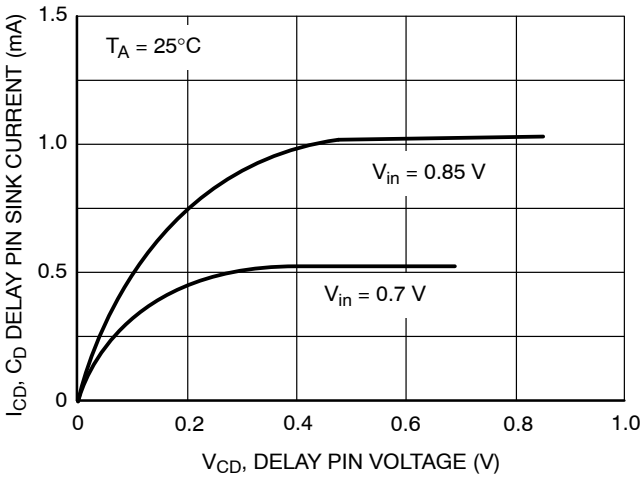

Figure 24. NCP302/3 Series 0.9 V C_D Delay Pin Sink Current vs. Voltage

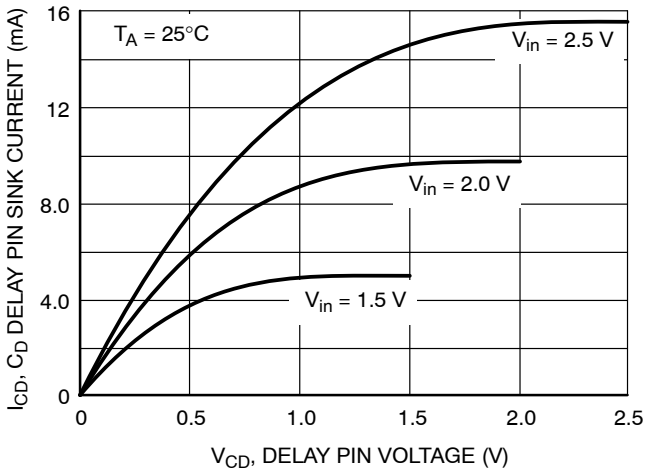

Figure 25. NCP302/3 Series 2.7 V C_D Delay Pin Sink Current vs. Voltage

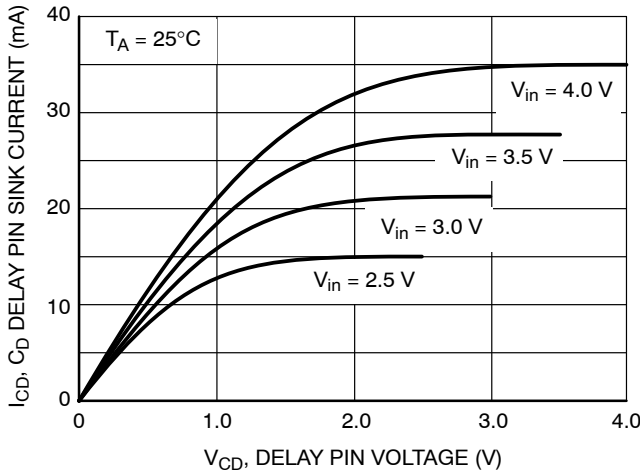

Figure 26. NCP302/3 Series 4.5 V C_D Delay Pin Sink Current vs. Voltage

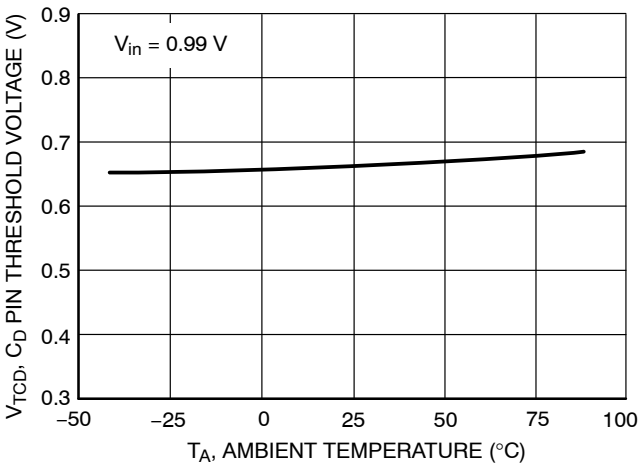

Figure 27. NCP302/3 Series 0.9 V C_D Delay Pin Threshold Voltage vs. Temperature

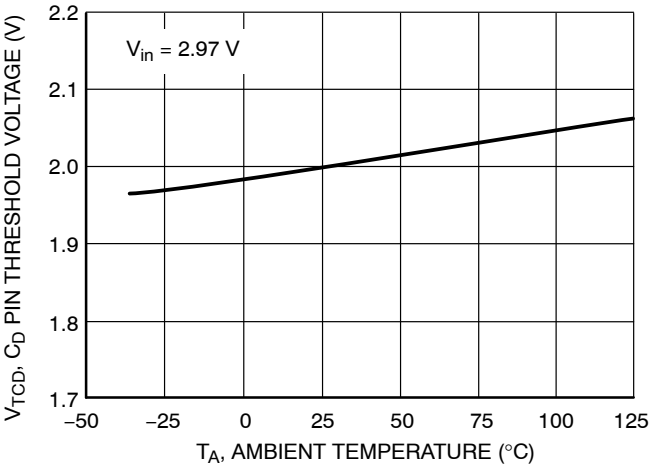

Figure 28. NCP302/3 Series 2.7 V C_D Delay Pin Threshold Voltage vs. Temperature

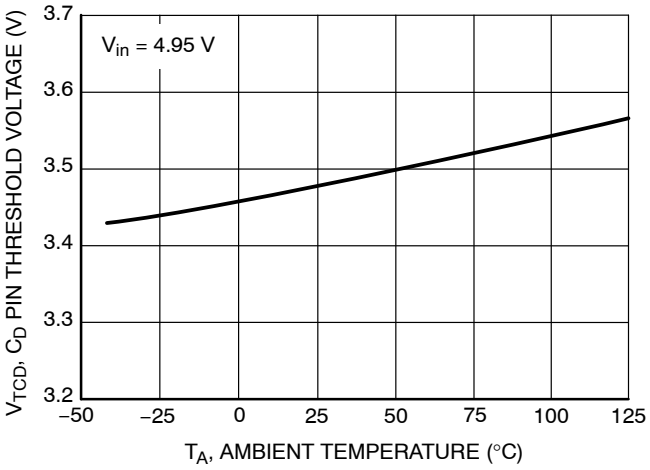

Figure 29. NCP302/3 Series 4.5 V C_D Delay Pin Threshold Voltage vs. Temperature

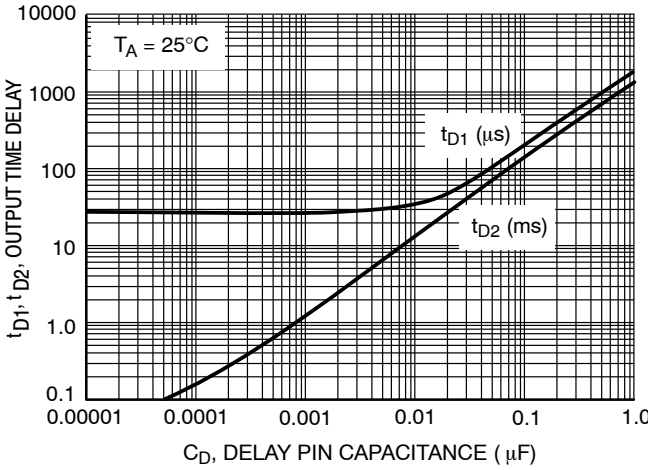

Figure 30. NCP302/3 Series 0.9 V Output Time Delay vs. Capacitance

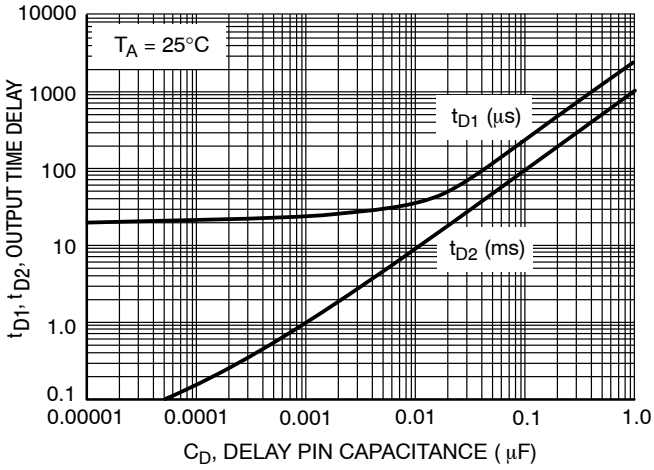

Figure 31. NCP302/3 Series 2.7 V Output Time Delay vs. Capacitance

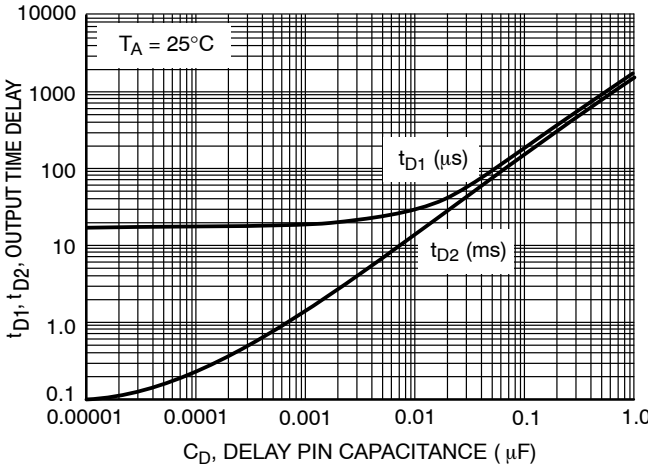

Figure 32. NCP302/3 Series 4.5 V Output Time Delay vs. Capacitance

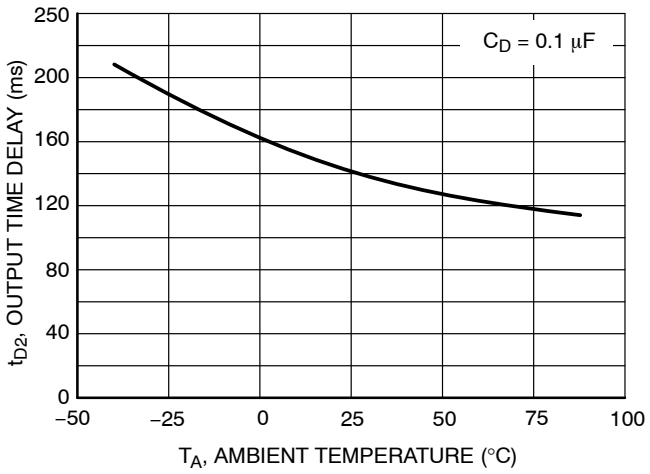

Figure 33. NCP302/3 Series 0.9 V Reset Output Time Delay vs. Temperature

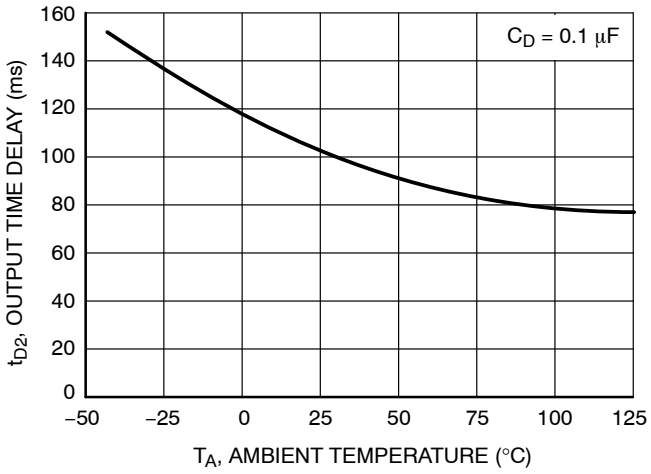

Figure 34. NCP302/3 Series 2.7 V Reset Output Time Delay vs. Temperature

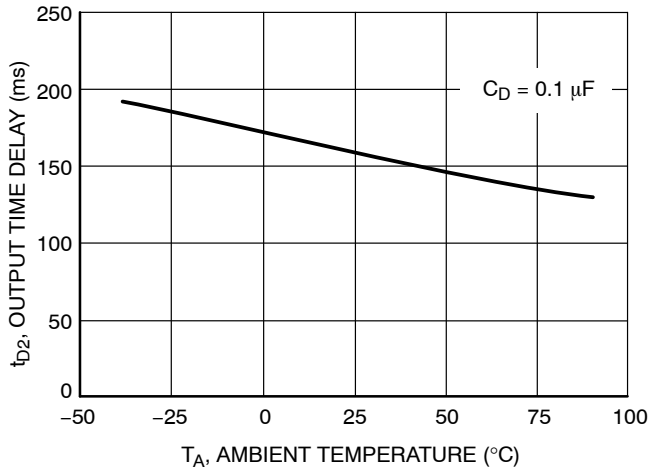

Figure 35. NCP302/3 Series 4.5 V Reset Output Time Delay vs. Temperature

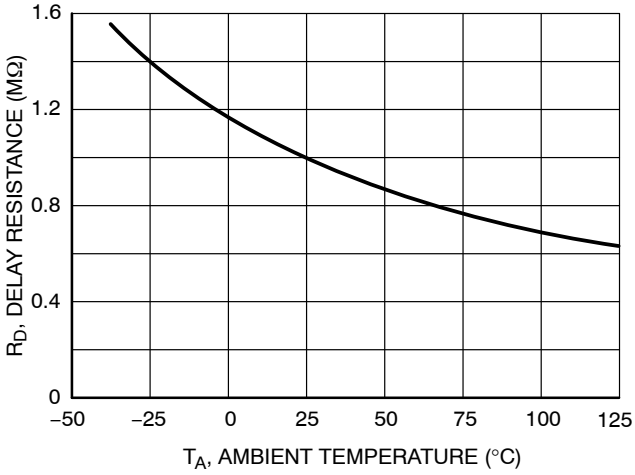

Figure 36. NCP302/3 Series Delay Resistance vs. Temperature

OPERATING DESCRIPTION

The NCP302 and NCP303 series devices consist of a precision voltage detector that drives a time delay generator. Figures 37 and 38 show a timing diagram and a typical application. Initially consider that input voltage V_{in} is at a nominal level and it is greater than the voltage detector upper threshold (V_{DET+}). The voltage at Pin 5 and capacitor C_D will be at the same level as V_{in}, and the reset output (Pin 1) will be in the high state for active low devices, or in the low state for active high devices. If there is a power interruption and V_{in} becomes significantly deficient, it will fall below the lower detector threshold (V_{DET-}) and the external time delay capacitor C_D will be immediately discharged by an internal N−Channel MOSFET that connects to Pin 5. This sequence of events causes the Reset output to be in the low state for active low devices, or in the high state for active high devices. After completion of the power interruption, V_{in} will again return to its nominal level and become greater than the V_{DET+}. The voltage detector will turn off the N−Channel MOSFET and allow pullup resistor R_D to charge external capacitor C_D, thus creating a programmable delay for releasing the reset signal. When the voltage at Pin 5 exceeds the inverter/buffer threshold, typically 0.675 V_{in}, the reset output will revert back to its original state. The reset output time delay versus capacitance is shown in Figures 30 through 32. The voltage detector and inverter/buffer have built−in hysteresis to prevent erratic reset operation.

Although these device series are specifically designed for use as reset controllers in portable microprocessor based systems, they offer a cost−effective solution in numerous applications where precise voltage monitoring and time delay are required. Figures 38 through 46 show various application examples.

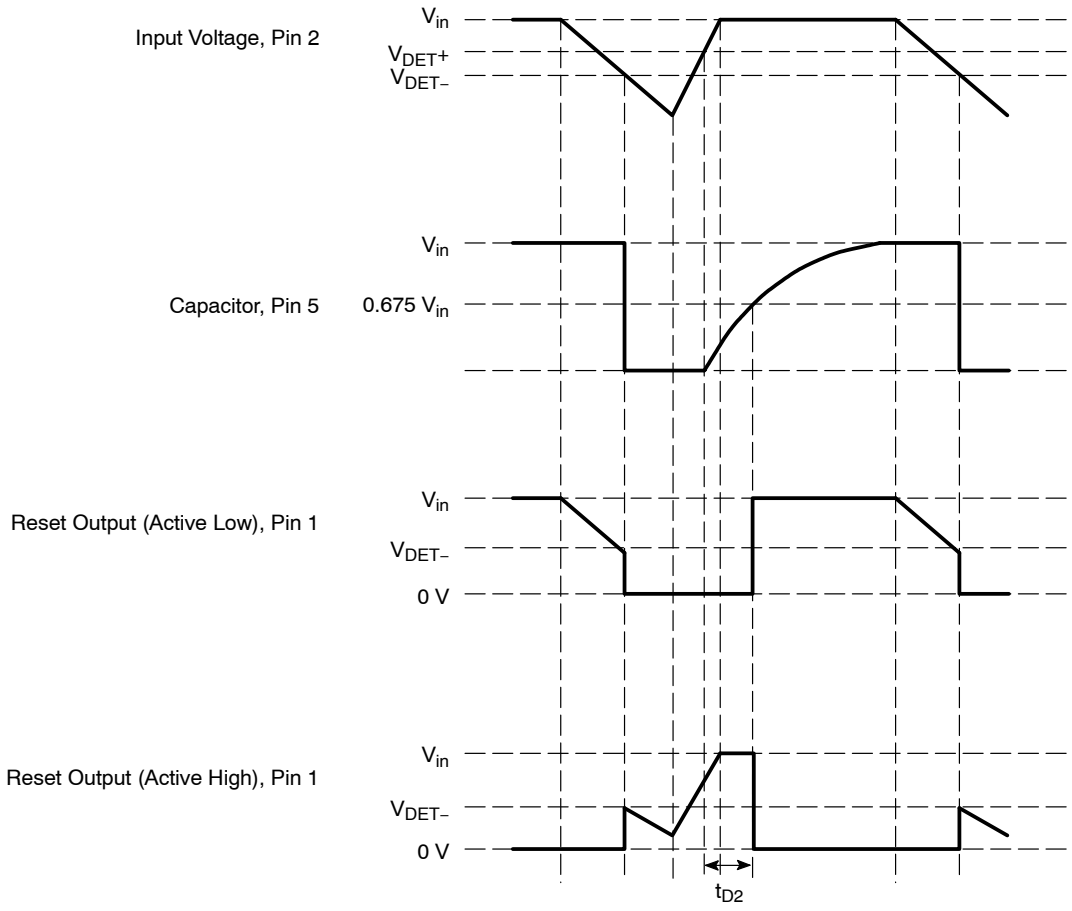

Figure 37. Timing Waveforms

APPLICATION CIRCUIT INFORMATION

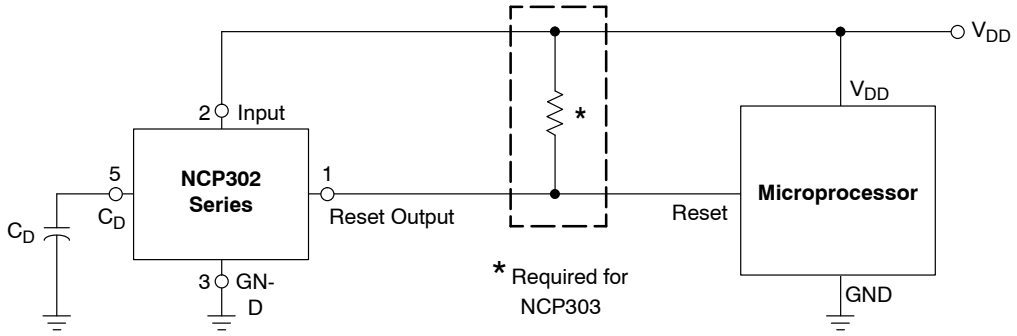

Figure 38. Microprocessor Reset Circuit

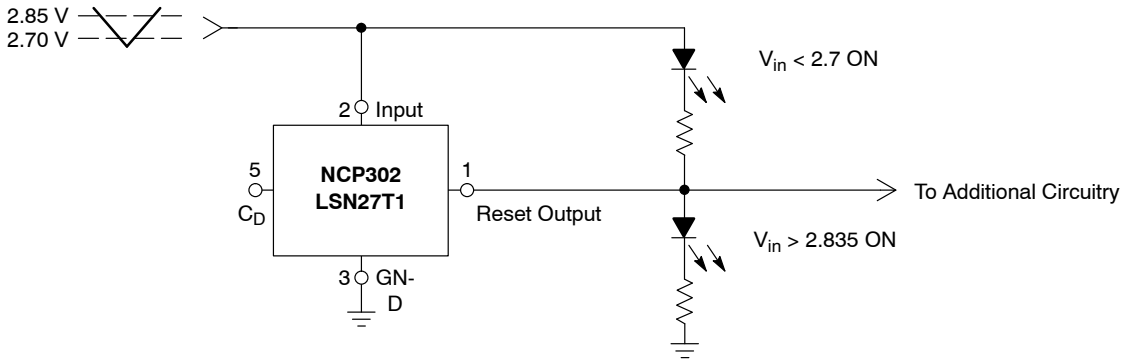

Figure 39. Battery Charge Indicator

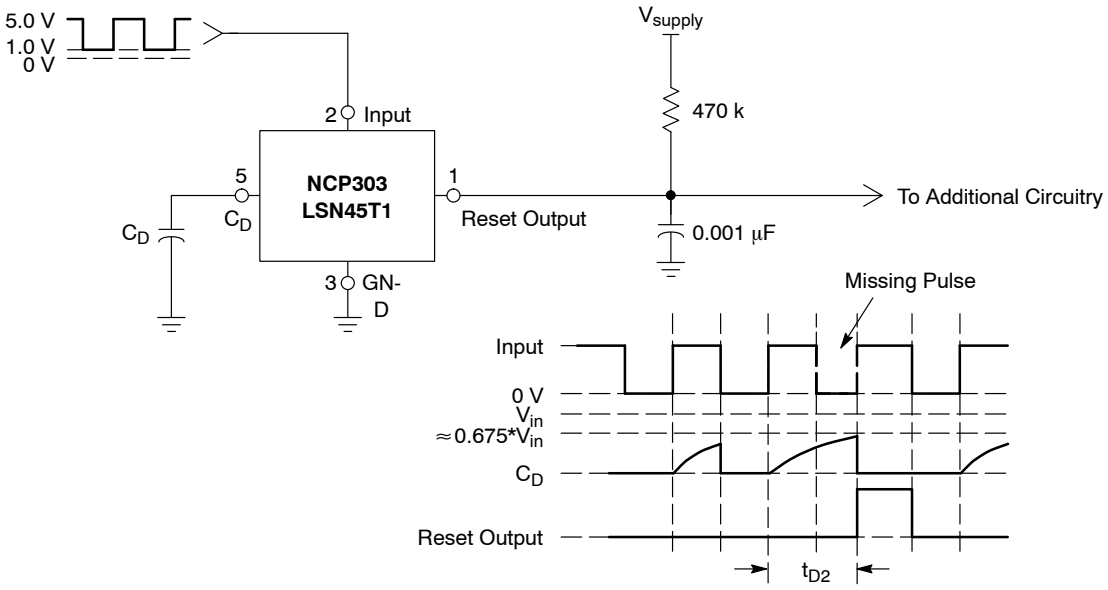

Figure 40. Missing Pulse Detector or Frequency Detector

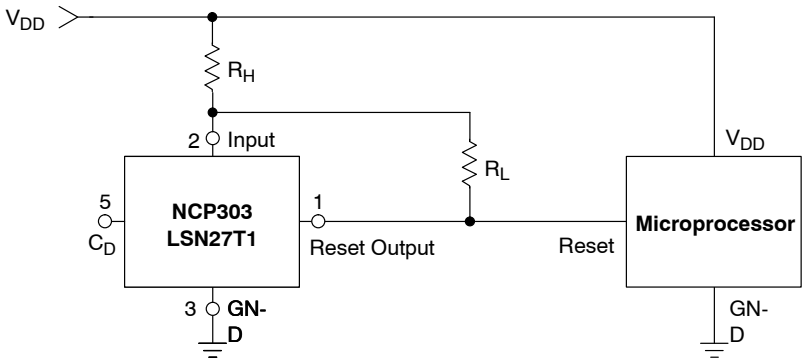

Figure 41. Microprocessor Reset Circuit with Additional Hysteresis

Comparator hysteresis can be increased with the addition of resistor R_H. The hysteresis equations have been simplified and do not account for the change of input current I_{in} as V_{in} crosses the comparator threshold. The internal resistance, R_{in} is simply calculated using I_{in} = 0.26 μA at 2.6 V.

V_{in} Decreasing:

$$V_{th} = \left(\frac{R_H}{R_{in}} + 1\right)(V_{DET-})$$

V_{in} Increasing:

$$V_{th} = \left(\frac{R_H}{R_{in} \parallel R_L} + 1\right)(V_{DET-} + V_{HYS})$$

$V_{HYS} = V_{in}$ Increasing − V_{in} Decreasing

Test Data				
V_{th} Decreasing (V)	V_{th} Increasing (V)	V_{HYS} (V)	R_H (Ω)	R_L (kΩ)
2.70	2.84	0.135	0	–
2.70	2.87	0.17	100	10
2.70	2.88	0.19	100	6.8
2.70	2.91	0.21	100	4.3
2.70	2.90	0.20	220	10
2.70	2.94	0.24	220	6.8
2.70	2.98	0.28	220	4.3
2.70	2.70	0.27	470	10
2.70	3.04	0.34	470	6.8
2.70	3.15	0.35	470	4.3

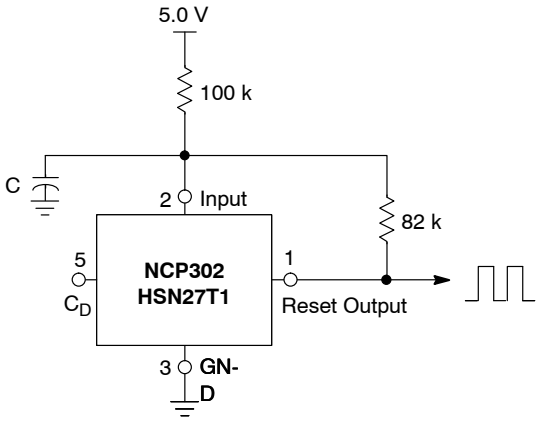

Test Data		
C (μF)	f_{OSC} (kHz)	I_Q (μA)
0.01	2590	21.77
0.1	490	21.97
1.0	52	22.07

Figure 42. Simple Clock Oscillator

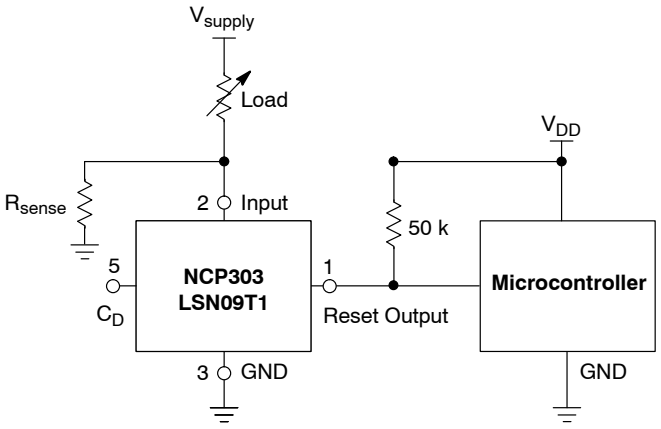

This circuit monitors the current at the load. As current flows through the load, a voltage drop with respect to ground appears across R_{sense} where $V_{sense} = I_{load} * R_{sense}$. The following conditions apply:

If:	Then:
$I_{Load} < V_{DET-}/R_{sense}$	Reset Output = 0 V
$I_{Load} \geq (V_{DET-}+V_{HYS})/R_{sense}$	Reset Output = V_{DD}

Figure 43. Microcontroller Systems Load Sensing

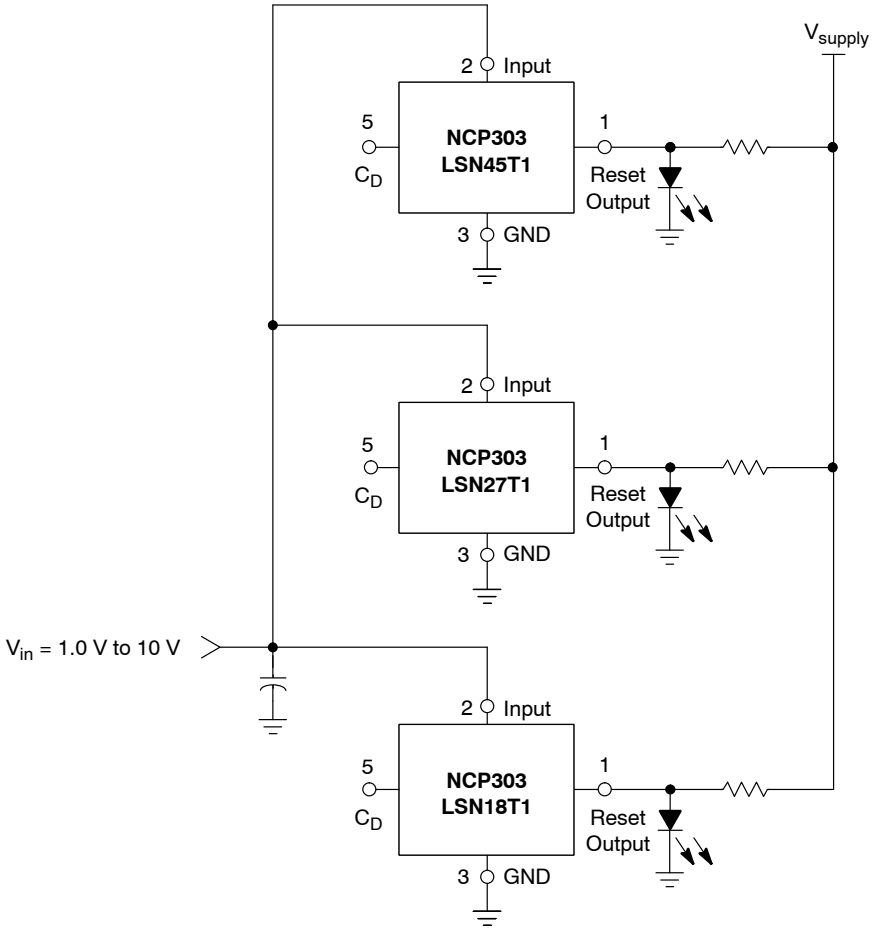

A simple voltage monitor can be constructed by connecting several voltage detectors as shown above. Each LED will sequentially turn on when the respective voltage detector threshold (V_{DET-} +V_{HYS}) is exceeded. Note that detector thresholds (V_{DET-}) that range from 0.9 V to 4.9 V in 100 mV steps can be manufactured.

Figure 44. LED Bar Graph Voltage Monitor

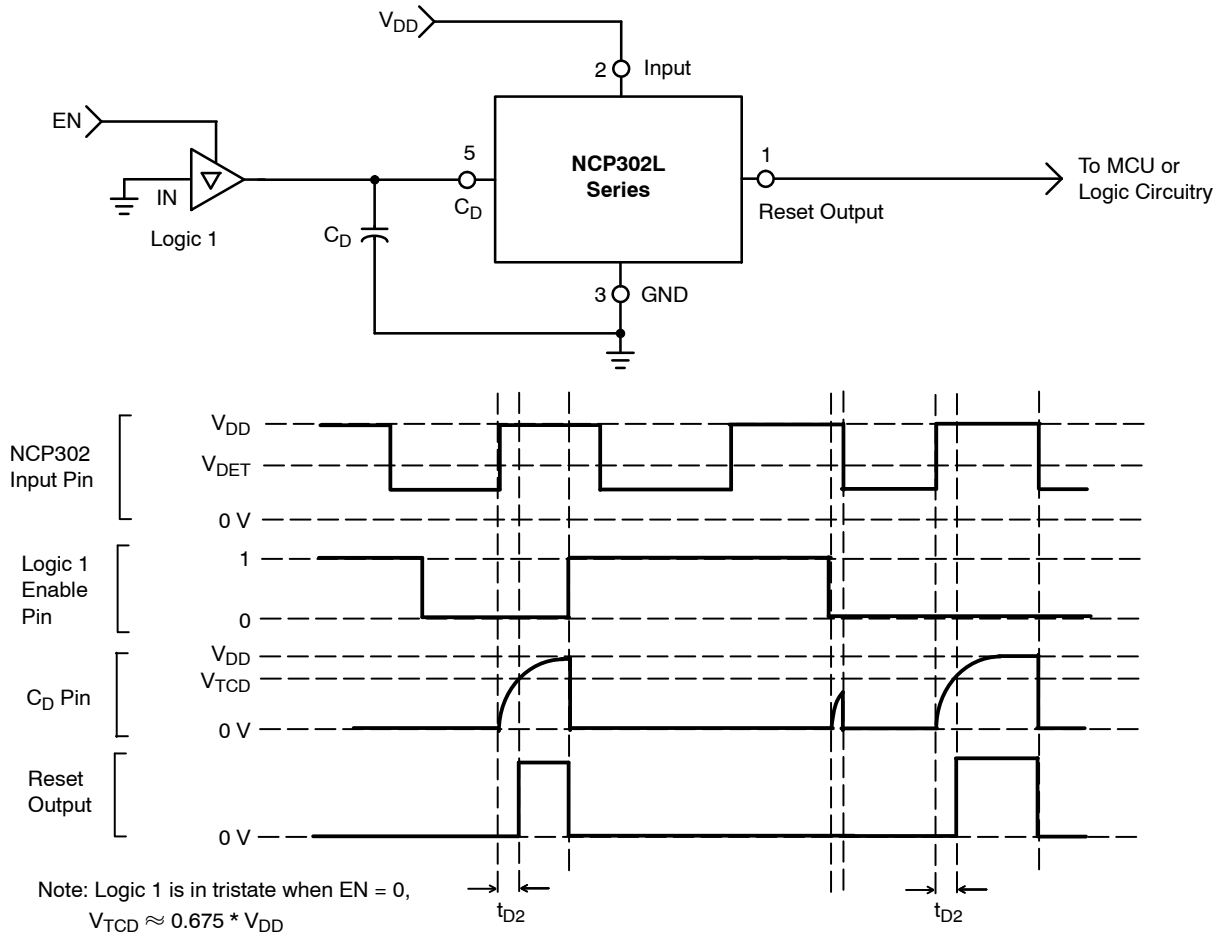

Figure 45. Undervoltage Detection with Independent Reset Signal Control

This circuit monitors V_{DD} for undervoltage. If the V_{DD} input falls below the detector threshold (V_{DET-}), then the capacitor on the C_D pin will be immediately discharged resulting in the reset output changing to its active state indicating that an undervoltage event has been detected. The addition of a logic gate (Logic 1) provides for reset output control which is independent of V_{DD}. If the output of the logic gate is tristated the undervoltage detector will behave normally. If the tristate is de−asserted, the logic gate will pull the C_D pin low resulting in the Reset Output pin changing to an active state. This independent control is useful in power supply sequencing applications when the Reset Output is tied to the enable input of an LDO or DC−DC converter.

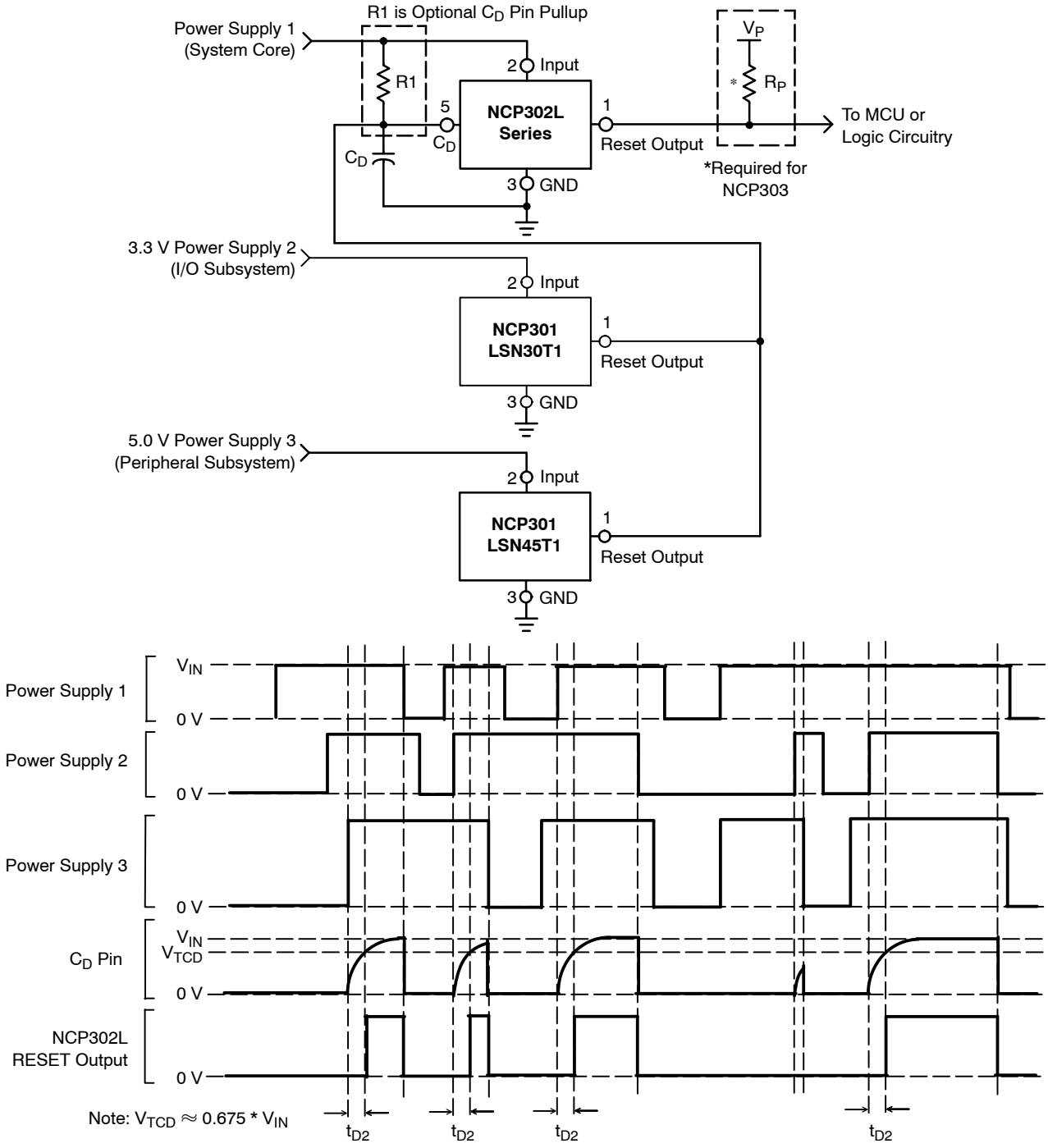

Figure 46. Multi−Rail Supply Undervoltage Monitor with Power Good

This circuit monitors multiple power supply rails for undervoltage conditions. If any of the three power supplies are in an undervoltage condition, the NCP302 reset output will be immediately set to an active low level. All three power supplies must be above their minimum voltage levels for the NCP302 reset output to generate a “Power Good” level (Reset Output = Power Supply 1 or V_P).

Optionally, R1 may be added to provide a smaller effective C_D pin pullup resistance, (R_D’), where $R_D' = R1 \parallel R_D$, with R_D (internal C_D pin pullup resistance) approximately equal to 1.0 MΩ, and R1 > 5 kΩ. If R1 << R_D, then R1 also can decrease the reset output delay time (t_{D2}) variance over the operating temperature range.

The Power Good signal time delay (t_{D2}) can be estimated by: $t_{D2} \approx R_D * C_D$, with R_D in Ohms, and C_D in Farads. If R1 is installed, then R_D’ is substituted for R_D. R_P is added only if using the NCP303 to replace the NCP302. This allows the Reset Output to be pulled up to V_P, which can be the Power Supply 1 or an independent power supply rail.

ORDERING INFORMATION

Device	Threshold Voltage	Output Type	Reset	Marking	Package	Shipping†
NCP302LSN09T1G	0.9	CMOS	Active Low	SBO	TSOP−5 (Pb−Free)	3000 / Tape & Reel (7 inch Reel)
NCP302LSN15T1G	1.5			SBI	TSOP−5 (Pb−Free)	
NCP302LSN18T1G	1.8			SBF	TSOP−5 (Pb−Free)	
NCP302LSN20T1G	2.0			SBD	TSOP−5 (Pb−Free)	
NCV302LSN20T1G*				AHH		
NCP302LSN27T1G	2.7			SAW	TSOP−5 (Pb−Free)	
NCP302LSN28T1G	2.8			ALA	TSOP−5 (Pb−Free)	
NCP302LSN30T1G	3.0			SAT	TSOP−5 (Pb−Free)	
NCV302LSN30T1G*				ACJ		
NCP302LSN33T1G	3.3			SAQ	TSOP−5 (Pb−Free)	
NCP302LSN38T1G	3.8			SAK	TSOP−5 (Pb−Free)	
NCP302LSN40T1G	4.0			SAI	TSOP−5 (Pb−Free)	
NCP302LSN43T1G	4.3			SAF	TSOP−5 (Pb−Free)	
NCP302LSN45T1G	4.5			SAL	TSOP−5 (Pb−Free)	
NCP302LSN47T1G	4.7			SAC	TSOP−5 (Pb−Free)	
NCP302HSN09T1G	0.9		Active High	SDO	TSOP−5 (Pb−Free)	
NCP302HSN18T1G	1.8			SFH	TSOP−5 (Pb−Free)	
NCP302HSN27T1G	2.7			SDK	TSOP−5 (Pb−Free)	
NCP302HSN30T1G	3.0			SDI	TSOP−5 (Pb−Free)	
NCP302HSN40T1G	4.0			SJH	TSOP−5 (Pb−Free)	
NCP302HSN45T1G	4.5			SDG	TSOP−5 (Pb−Free)	

NOTE: The ordering information lists standard undervoltage thresholds with active low outputs. Additional active low threshold devices, ranging from 0.9 V to 4.9 V in 100 mV increments and NCP302 active high output devices, ranging from 0.9 V to 4.9 V in 100 mV increments can be manufactured. Contact your **onsemi** representative for availability. The electrical characteristics of these additional devices are shown in Tables 1 and 2.

†For information on tape and reel specifications, including part orientation and tape sizes, please refer to our Tape and Reel Packaging Specifications Brochure, BRD8011/D.

*NCV Prefix for Automotive and Other Applications Requiring Unique Site and Control Change Requirements; AEC−Q100 Qualified and PPAP Capable.
NCVxxx: T_{low} = −40°C, T_{high} = +125°C. Guaranteed by design.

ORDERING INFORMATION

Device	Threshold Voltage	Output Type	Reset	Marking	Package	Shipping†
NCP303LSN09T1G	0.9	Open Drain	Active Low	SDE	TSOP−5 (Pb−Free)	3000 / Tape & Reel (7 inch Reel)
NCV303LSN09T1G*				AMU		
NCP303LSN10T1G	1.0			SDD	TSOP−5 (Pb−Free)	
NCV303LSN10T1G*				SSM		
NCP303LSN11T1G	1.1			SDC	TSOP−5 (Pb−Free)	
NCV303LSN11T1G*				ADC		
NCV303LSN12T1G*	1.2			SDB	TSOP−5 (Pb−Free)	
NCP303LSN13T1G	1.3			SDA	TSOP−5 (Pb−Free)	
NCV303LSN13T1G*				SRS		
NCP303LSN14T1G	1.4			SCZ	TSOP−5 (Pb−Free)	
NCV303LSN14T1G*				SRT		
NCP303LSN15T1G	1.5			SCY	TSOP−5 (Pb−Free)	
NCV303LSN15T1G*				SRU		
NCP303LSN16T1G	1.6			SCX	TSOP−5 (Pb−Free)	
NCV303LSN16T1G*				SRV		
NCP303LSN17T1G	1.7			SCW	TSOP−5	
NCP303LSN18T1G	1.8			SCV	TSOP−5 (Pb−Free)	
NCP303LSN20T1G	2.0			SCT	TSOP−5 (Pb−Free)	
NCV303LSN20T1G*				SRW		

NOTE: The ordering information lists standard undervoltage thresholds with active low outputs. Additional active low threshold devices, ranging from 0.9 V to 4.9 V in 100 mV increments and NCP302 active high output devices, ranging from 0.9 V to 4.9 V in 100 mV increments can be manufactured. Contact your **onsemi** representative for availability. The electrical characteristics of these additional devices are shown in Tables 1 and 2.

†For information on tape and reel specifications, including part orientation and tape sizes, please refer to our Tape and Reel Packaging Specifications Brochure, BRD8011/D.

*NCV Prefix for Automotive and Other Applications Requiring Unique Site and Control Change Requirements; AEC−Q100 Qualified and PPAP Capable.
NCVxxx: T_{low} = −40°C, T_{high} = +125°C. Guaranteed by design.

ORDERING INFORMATION

Device	Threshold Voltage	Output Type	Reset	Marking	Package	Shipping†
NCP303LSN22T1G	2.2	Open Drain	Active Low	SCR	TSOP−5 (Pb−Free)	3000 / Tape & Reel (7 inch Reel)
NCV303LSN22T1G*				ADD		
NCP303LSN23T1G	2.3			SCQ	TSOP−5 (Pb−Free)	
NCV303LSN23T1G*				SRX		
NCP303LSN24T1G	2.4			SCP	TSOP−5 (Pb−Free)	
NCV303LSN24T1G*				SRY		
NCP303LSN25T1G	2.5			SCO	TSOP−5 (Pb−Free)	
NCV303LSN25T1G*				AHA		
NCP303LSN26T1G	2.6			SCN	TSOP−5 (Pb−Free)	
NCP303LSN27T1G	2.7			SCM	TSOP−5 (Pb−Free)	
NCV303LSN27T1G*				CAP		
NCP303LSN28T1G	2.8			SCL	TSOP−5 (Pb−Free)	
NCV303LSN28T1G*				TAA		
NCP303LSN29T1G	2.9			SCK	TSOP−5 (Pb−Free)	
NCV303LSN29T1G*				SSK	TSOP−5 (Pb−Free)	
NCP303LSN30T1G	3.0			SCJ	TSOP−5 (Pb−Free)	
NCV303LSN30T1G*				SSA	TSOP−5 (Pb−Free)	
NCP303LSN31T1G	3.1			SCI	TSOP−5 (Pb−Free)	
NCV303LSN31T1G*				CAR	TSOP−5 (Pb−Free)	
NCP303LSN32T1G	3.2			SCH	TSOP−5 (Pb−Free)	

NOTE: The ordering information lists standard undervoltage thresholds with active low outputs. Additional active low threshold devices, ranging from 0.9 V to 4.9 V in 100 mV increments and NCP302 active high output devices, ranging from 0.9 V to 4.9 V in 100 mV increments can be manufactured. Contact your **onsemi** representative for availability. The electrical characteristics of these additional devices are shown in Tables 1 and 2.

†For information on tape and reel specifications, including part orientation and tape sizes, please refer to our Tape and Reel Packaging Specifications Brochure, BRD8011/D.

*NCV Prefix for Automotive and Other Applications Requiring Unique Site and Control Change Requirements; AEC−Q100 Qualified and PPAP Capable.
NCVxxx: T_{low} = −40°C, T_{high} = +125°C. Guaranteed by design.

ORDERING INFORMATION

Device	Threshold Voltage	Output Type	Reset	Marking	Package	Shipping†
NCP303LSN33T1G	3.3	Open Drain	Active Low	SCG	TSOP−5 (Pb−Free)	3000 / Tape & Reel (7 inch Reel)
NCP303LSN34T1G	3.4			SCF	TSOP−5 (Pb−Free)	
NCV303LSN34T1G*				CAT		
NCP303LSN36T1G	3.6			SCD	TSOP−5 (Pb−Free)	
NCV303LSN36T1G*				SSC		
NCP303LSN38T1G	3.8			SCA	TSOP−5 (Pb−Free)	
NCP303LSN40T1G	4.0			SBY	TSOP−5 (Pb−Free)	
NCV303LSN40T1G*				SSD		
NCP303LSN42T1G	4.2			SBW	TSOP−5 (Pb−Free)	
NCV303LSN42T1G*				SSE		
NCV303LSN43T1G*	4.3			SBV	TSOP−5 (Pb−Free)	
NCP303LSN44T1G	4.4			SBU	TSOP−5 (Pb−Free)	
NCV303LSN44T1*				SSF	TSOP−5	
NCV303LSN44T1G*					TSOP−5 (Pb−Free)	
NCP303LSN45T1G	4.5			SBT	TSOP−5 (Pb−Free)	
NCV303LSN45T1G*				SSG		
NCP303LSN46T1G	4.6			SBS	TSOP−5 (Pb−Free)	
NCV303LSN46T1*				SSH	TSOP−5	
NCV303LSN46T1G*					TSOP−5 (Pb−Free)	
NCP303LSN47T1G	4.7			SBR	TSOP−5 (Pb−Free)	
NCV303LSN47T1*				SSJ	TSOP−5	
NCV303LSN47T1G*					TSOP−5 (Pb−Free)	
NCP303LSN49T1G	4.9			SBP	TSOP−5 (Pb−Free)	
NCV303LSN49T1*				SSI	TSOP−5	
NCV303LSN49T1G*					TSOP−5 (Pb−Free)	

NOTE: The ordering information lists standard undervoltage thresholds with active low outputs. Additional active low threshold devices, ranging from 0.9 V to 4.9 V in 100 mV increments and NCP302 active high output devices, ranging from 0.9 V to 4.9 V in 100 mV increments can be manufactured. Contact your **onsemi** representative for availability. The electrical characteristics of these additional devices are shown in Tables 1 and 2.

†For information on tape and reel specifications, including part orientation and tape sizes, please refer to our Tape and Reel Packaging Specifications Brochure, BRD8011/D.

*NCV Prefix for Automotive and Other Applications Requiring Unique Site and Control Change Requirements; AEC−Q100 Qualified and PPAP Capable.
NCVxxx: T_{low} = −40°C, T_{high} = +125°C. Guaranteed by design.

MECHANICAL CASE OUTLINE
PACKAGE DIMENSIONS

ON Semiconductor®

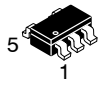

SCALE 2:1

TSOP−5
CASE 483
ISSUE N

DATE 12 AUG 2020

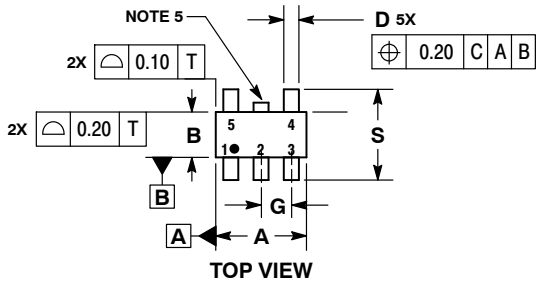

TOP VIEW

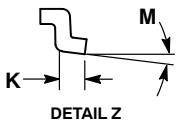

DETAIL Z

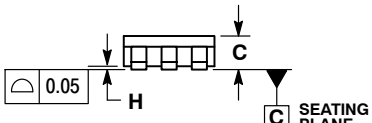

SIDE VIEW

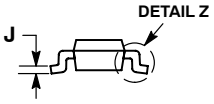

END VIEW

NOTES:
1. DIMENSIONING AND TOLERANCING PER ASME Y14.5M, 1994.
2. CONTROLLING DIMENSION: MILLIMETERS.
3. MAXIMUM LEAD THICKNESS INCLUDES LEAD FINISH THICKNESS. MINIMUM LEAD THICKNESS IS THE MINIMUM THICKNESS OF BASE MATERIAL.
4. DIMENSIONS A AND B DO NOT INCLUDE MOLD FLASH, PROTRUSIONS, OR GATE BURRS. MOLD FLASH, PROTRUSIONS, OR GATE BURRS SHALL NOT EXCEED 0.15 PER SIDE. DIMENSION A.
5. OPTIONAL CONSTRUCTION: AN ADDITIONAL TRIMMED LEAD IS ALLOWED IN THIS LOCATION. TRIMMED LEAD NOT TO EXTEND MORE THAN 0.2 FROM BODY.

	MILLIMETERS	
DIM	MIN	MAX
A	2.85	3.15
B	1.35	1.65
C	0.90	1.10
D	0.25	0.50
G	0.95 BSC	
H	0.01	0.10
J	0.10	0.26
K	0.20	0.60
M	0 °	10 °
S	2.50	3.00

SOLDERING FOOTPRINT*

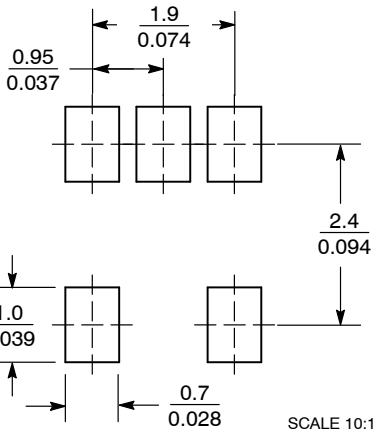

SCALE 10:1 (mm / inches)

*For additional information on our Pb−Free strategy and soldering details, please download the ON Semiconductor Soldering and Mounting Techniques Reference Manual, SOLDERRM/D.

GENERIC MARKING DIAGRAM*

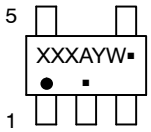

Analog

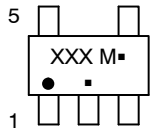

Discrete/Logic

XXX = Specific Device Code
A = Assembly Location
Y = Year
W = Work Week
▪ = Pb−Free Package

XXX = Specific Device Code
M = Date Code
▪ = Pb−Free Package

(Note: Microdot may be in either location)

*This information is generic. Please refer to device data sheet for actual part marking. Pb−Free indicator, “G” or microdot “ ▪”, may or may not be present.

DOCUMENT NUMBER:	98ARB18753C	Electronic versions are uncontrolled except when accessed directly from the Document Repository. Printed versions are uncontrolled except when stamped “CONTROLLED COPY” in red.
DESCRIPTION:	TSOP−5	PAGE 1 OF 1

ON Semiconductor and ON are trademarks of Semiconductor Components Industries, LLC dba ON Semiconductor or its subsidiaries in the United States and/or other countries. ON Semiconductor reserves the right to make changes without further notice to any products herein. ON Semiconductor makes no warranty, representation or guarantee regarding the suitability of its products for any particular purpose, nor does ON Semiconductor assume any liability arising out of the application or use of any product or circuit, and specifically disclaims any and all liability, including without limitation special, consequential or incidental damages. ON Semiconductor does not convey any license under its patent rights nor the rights of others.

© Semiconductor Components Industries, LLC, 2018

onsemi, ONSEMI , and other names, marks, and brands are registered and/or common law trademarks of Semiconductor Components Industries, LLC dba "**onsemi**" or its affiliates and/or subsidiaries in the United States and/or other countries. **onsemi** owns the rights to a number of patents, trademarks, copyrights, trade secrets, and other intellectual property. A listing of **onsemi**'s product/patent coverage may be accessed at www.onsemi.com/site/pdf/Patent−Marking.pdf. **onsemi** reserves the right to make changes at any time to any products or information herein, without notice. The information herein is provided "as−is" and **onsemi** makes no warranty, representation or guarantee regarding the accuracy of the information, product features, availability, functionality, or suitability of its products for any particular purpose, nor does **onsemi** assume any liability arising out of the application or use of any product or circuit, and specifically disclaims any and all liability, including without limitation special, consequential or incidental damages. Buyer is responsible for its products and applications using **onsemi** products, including compliance with all laws, regulations and safety requirements or standards, regardless of any support or applications information provided by **onsemi**. "Typical" parameters which may be provided in **onsemi** data sheets and/or specifications can and do vary in different applications and actual performance may vary over time. All operating parameters, including "Typicals" must be validated for each customer application by customer's technical experts. **onsemi** does not convey any license under any of its intellectual property rights nor the rights of others. **onsemi** products are not designed, intended, or authorized for use as a critical component in life support systems or any FDA Class 3 medical devices or medical devices with a same or similar classification in a foreign jurisdiction or any devices intended for implantation in the human body. Should Buyer purchase or use **onsemi** products for any such unintended or unauthorized application, Buyer shall indemnify and hold **onsemi** and its officers, employees, subsidiaries, affiliates, and distributors harmless against all claims, costs, damages, and expenses, and reasonable attorney fees arising out of, directly or indirectly, any claim of personal injury or death associated with such unintended or unauthorized use, even if such claim alleges that **onsemi** was negligent regarding the design or manufacture of the part. **onsemi** is an Equal Opportunity/Affirmative Action Employer. This literature is subject to all applicable copyright laws and is not for resale in any manner.

PUBLICATION ORDERING INFORMATION

LITERATURE FULFILLMENT:
Email Requests to: orderlit@onsemi.com

onsemi Website: www.onsemi.com

TECHNICAL SUPPORT
North American Technical Support:
Voice Mail: 1 800−282−9855 Toll Free USA/Canada
Phone: 011 421 33 790 2910

Europe, Middle East and Africa Technical Support:
Phone: 00421 33 790 2910
For additional information, please contact your local Sales Representative

◊