NCP1090, NCP1091, NCP1092

Integrated IEEE 802.3af PoE-PD Interface Controller

ON Semiconductor®

http://onsemi.com

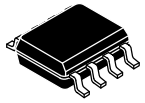

SOIC−8
S SUFFIX
CASE 751AZ

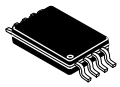

TSSOP−8
T SUFFIX
CASE 948S

Description

The NCP1090, NCP1091 and NCP1092 are members of ON Semiconductor's high power HIPO™ Power over Ethernet Powered Device (PoE−PD) product family and integrate an IEEE 802.3af PoE−PD interface controller.

The 3 variants all incorporate the required functions as such detection, classification, under voltage lockout, inrush and operational current limit. A power good signal has been added to guarantee a good enabling/disabling of the DC−DC controller. In addition, the NCP1091 offers a programmable under−voltage while the NCP1092 provide an auxiliary pin for applications supporting auxiliary supplies.

The NCP1090, NCP1091 and NCP1092 are fabricated in a robust high voltage process and integrates a rugged vertical N−channel DMOS suitable for the most demanding environments and capable of withstanding harsh environments such as hot swap and cable ESD events.

The NCP1090, NCP1091 and NCP1092 complement ON Semiconductor's ASSP portfolio in industrial devices and can be combined with stepper motor drivers, CAN bus drivers and other high−voltage interfacing devices to offer complete solutions to the industrial and security market.

Features

- Fully Supports IEEE 802.3af Specifications
- Programmable Classification Current
- Adjustable Under Voltage Lock Out (NCP1091 Only)
- Open−Drain Power Good Indicator
- 130 mA Inrush Current Limit
- 500 mA Operational Current Limit
- Pass Switch Disabling Input for Rear Auxiliary Supply Operation (NCP1092 Only)
- Over−temperature Protection
- Industrial Temperature Range −40°C to 85°C with Full Operation up to 125°C Junction Temperature
- 0.5 Ω Hot−swap Pass−switch
- Vertical N−channel DMOS Pass−switch Offers the Robustness of Discrete MOSFETs

PIN CONFIGURATION

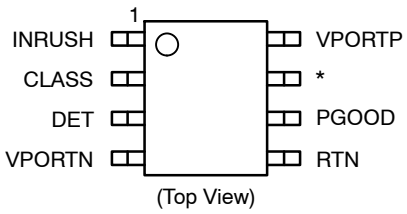

(Top View)

* NCP1090 = NC
NCP1091 = UVLO
NCP1092 = AUX

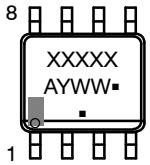

XXXXXX = Specific Device Code
A = Assembly Location
Y = Year
WW = Work Week
▪ = Pb−Free Package

ORDERING INFORMATION

Device	Package	Shipping†
NCP109xxxx	SOIC−8 (Pb−Free)	2500/Tape & Reel
NCP109xxxx	TSSOP−8 (Pb−Free)	2500/Tape & Reel

†For information on tape and reel specifications, including part orientation and tape sizes, please refer to our Tape and Reel Packaging Specification Brochure, BRD8011/D.

© Semiconductor Components Industries, LLC, 2011

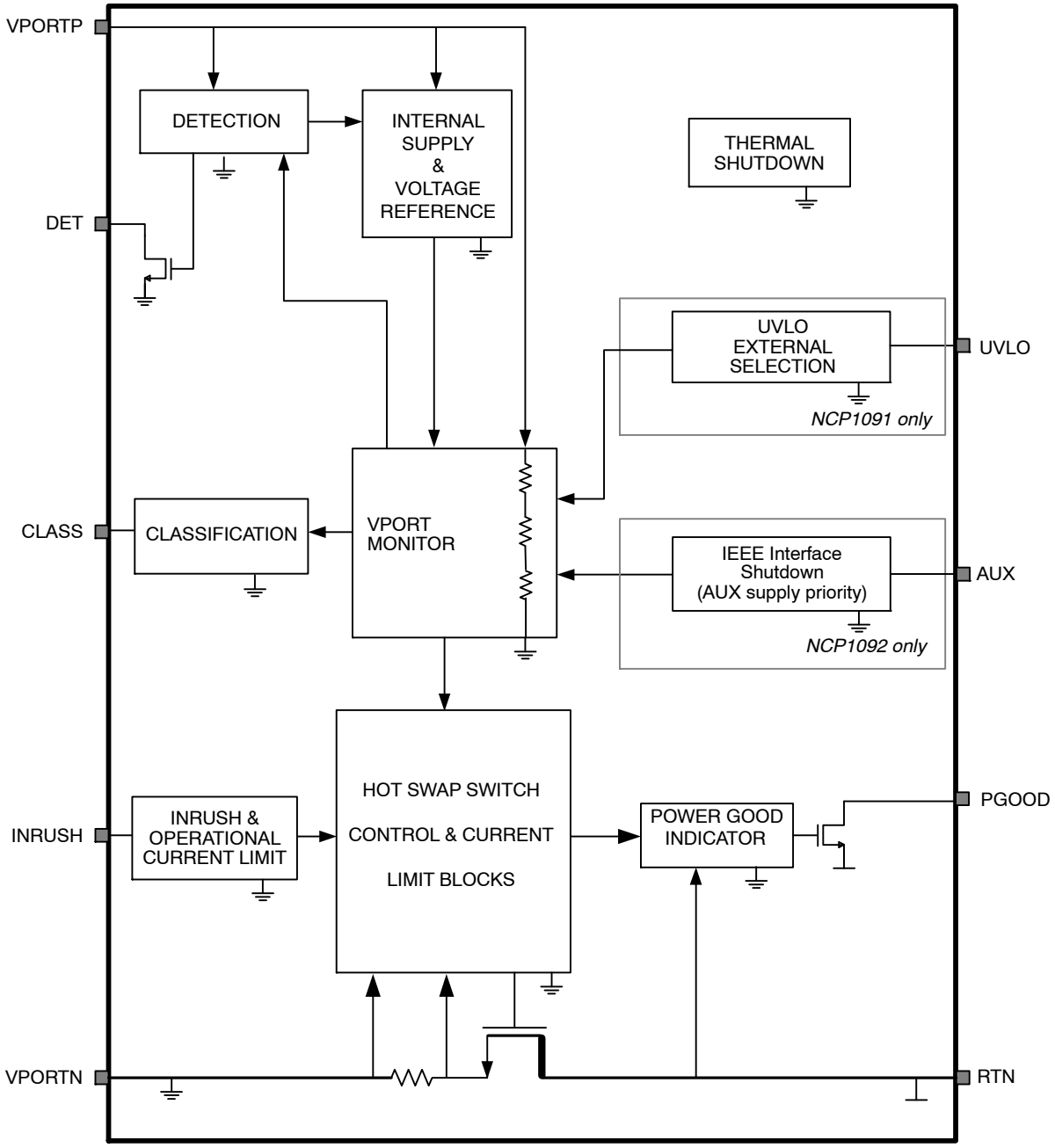

Figure 1. NCP1090/91/92 Functional Block Diagram

Simplified Application Diagrams

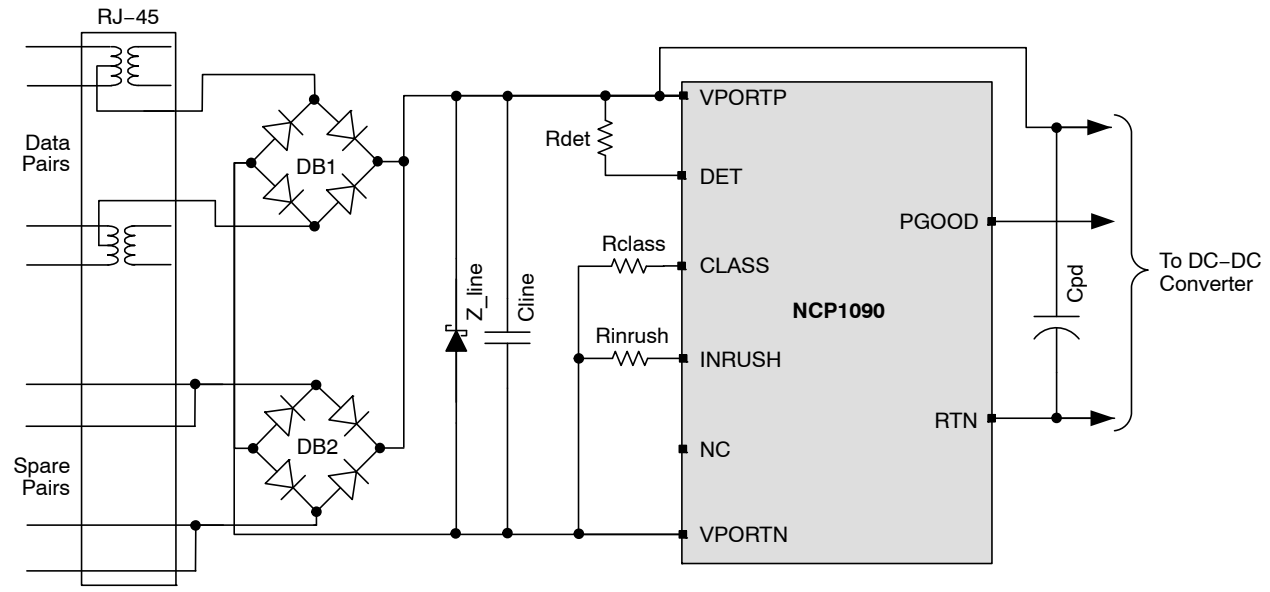

Figure 2. Typical Application Circuit using the NCP1090

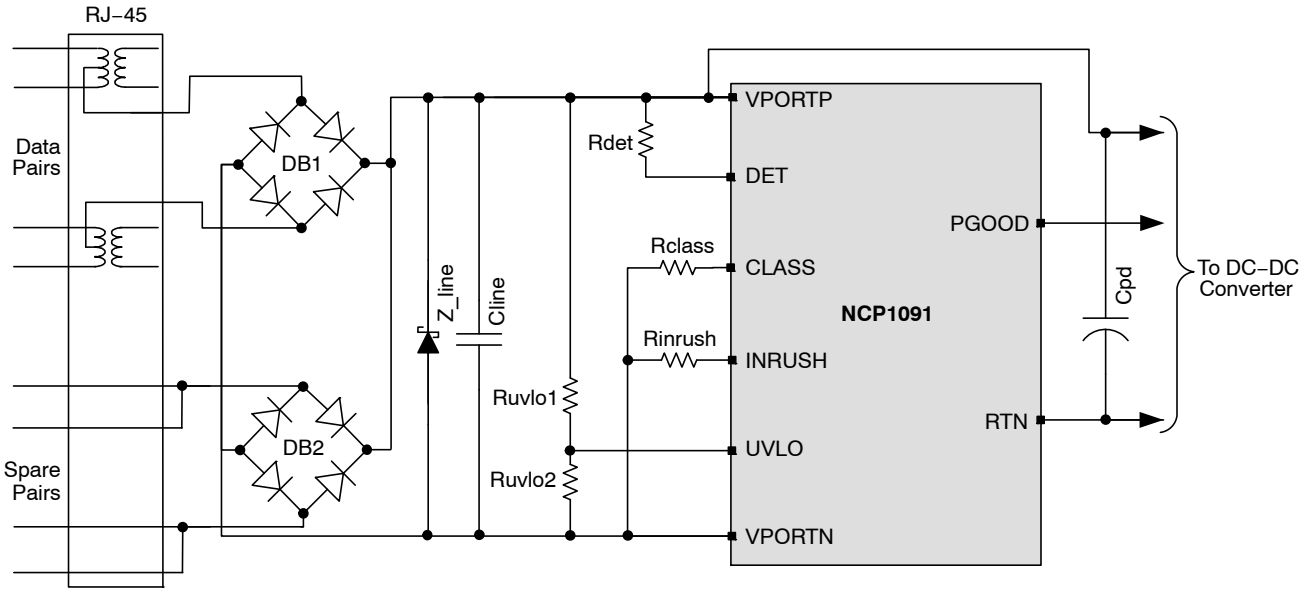

Figure 3. Typical Application Circuit using the NCP1091 with External UVLO Setting

Table 1. PIN DESCRIPTION

Name	Pin No.			Type	Description
	NCP1090	NCP1091	NCP1092		
INRUSH	1	1	1	Output	Current limit programming pin. Connect a resistor between INRUSH and VPORTN.
CLASS	2	2	2	Output	Classification current programming pin. Connect a resistor between CLASS and VPORTN.
DET	3	3	3	Output, Open Drain	Detection pin. Connect a 24.9 kΩ resistor between DET and VPORTP for a valid PD detection signature.
VPORTN	4	4	4	Ground	Negative input power. Connected to the source of the internal pass−switch
RTN	5	5	5	Ground	DC−DC controller power return. Connected to the drain of the internal pass−switch
PGOOD	6	6	6	Output, Open Drain	Open Drain Power Good Indicator. Pin is in HZ mode when the power good signal is active.
NC	7	–	–	–	No connection
UVLO	–	7	–	Input	Under−voltage lockout input. Voltage with respect to VPORTN. Connect a resistor−divider from VPORTP to UVLO to VPORTNx to set an external UVLO threshold.
AUX	–	–	7	Input	Auxiliary Pin. When this pin is pulled up, the Pass Switch is disabled and allows a supply transition from PSE to the rear auxiliary supply connected between VPORTP and RTN.
VPORTP	8	8	8	Input	Positive input power. Voltage with respect to VPORTN.

Operating Conditions

Table 2. ABSOLUTE MAXIMUM RATINGS

Symbol	Parameter	Min	Max	Units	Conditions
VPORTP	Input power supply	−0.3	72	V	Voltage with respect to VPORTN
RTN	Analog ground supply 2	−0.3	72	V	Pass−switch in off−state (voltage with respect to VPORTN)
CLASS	Analog output	−0.3	72	V	Voltage with respect to VPORTN
INRUSH	Analog output	−0.3	3.6	V	Voltage with respect to VPORTN
AUX	Analog input	−0.3	72	V	Voltage with respect to VPORTN
UVLO	Analog input	−0.3	3.6	V	Voltage with respect to VPORTN
PGOOD	Analog output	−0.3	72	V	Voltage with respect to RTN
Ta	Ambient temperature	−40	85	°C	
Tj	Junction temperature	–	125	°C	
Tj−TSD	Junction temperature (Note 1)	–	175	°C	Thermal shutdown condition
T_{stg}	Storage Temperature	−55	150	°C	
TθJA	Thermal Resistance, Junction to Air (Note 2)	150 160	240 260	°C/W	SOIC−8 TSSOP−8
ESD−HBM	Human Body Model	2		kV	per EIA−JESD22−A114 standard
ESD−CDM	Charged Device Model	500		V	per ESD−STM5.3.1 standard
ESD−MM	Machine Model	200		V	per EIA−JESD22−A115−A standard
LU	Latch−up	±100		mA	per JEDEC Standard JESD78

Stresses exceeding Maximum Ratings may damage the device. Maximum Ratings are stress ratings only. Functional operation above the Recommended Operating Conditions is not implied. Extended exposure to stresses above the Recommended Operating Conditions may affect device reliability.

1. Tj−TSD allowed during error conditions only. It is assumed that this maximum temperature condition does not occur more than 1 hour cumulative during the useful life for reliability reasons.
2. Low θJA is obtained with 2S2P test board (2 signal − 2 plane). High θJA is obtained with double sideboard with minimum pad area and natural convection. Refer to Jedec JESD51 for details.

Recommended Operating Conditions

Operating conditions define the limits for functional operation and parametric characteristics of the device. Note that the functionality of the device outside the operating conditions described in this section is not warranted. Operating outside the recommended operating conditions for extended periods of time may affect device reliability.

Table 3. OPERATING CONDITIONS (All values are with respect to VPORTN unless otherwise noted.)

Symbol	Parameter	Min	Typ	Max	Units	Conditions
INPUT SUPPLY						
VPORT	Input supply voltage	0		57	V	VPORT = VPORTP – VPORTN
SIGNATURE DETECTION						
Offset_det1	$I_{(VPORTP)} + I_{(RTN)}$		2	5	μA	VPORTP = RTN = 1.9 V Rdet = 24.9 KΩ
Sleep_det1	$I_{(VPORTP)} + I_{(RTN)}$		15	21	μA	VPORTP = RTN = 9.8 V Rdet = 24.9 KΩ
Offset_det2	$I_{(VPORTP)} + I_{(RTN)} + I_{(DET)}$	73	77	81	μA	VPORTP = RTN = 1.9 V Rdet = 24.9 KΩ
Sleep_det2	$I_{(VPORTP)} + I_{(RTN)} + I_{(DET)}$	390	400	412	μA	VPORTP = RTN = 9.8 V Rdet = 24.9 KΩ
CLASSIFICATION						
Vcl_on	Classification current turn−on lower threshold	9.8	11.3	13	V	VPORTP rising
Vcl_off	Classification current turn−off upper threshold	21		24	V	VPORTP rising
Vclass_reg	Classification buffer output voltage		9.8		V	13 V < VPORTP < 21 V
Icl_bias	I(vportp) quiescent current during classification		600		μA	I(class) excluded 13 V < VPORTP < 21 V
Iclass0	Class 0: Rclass 4420 Ω (Note 3)	0	–	4	mA	13 V < VPORTP < 21 V
Iclass1	Class 1: Rclass 953 Ω (Note 3)	9	–	12	mA	13 V < VPORTP < 21 V
Iclass2	Class 2: Rclass 549 Ω (Note 3)	17	–	20	mA	13 V < VPORTP < 21 V
Iclass3	Class 3: Rclass 357 Ω (Note 3)	26	–	30	mA	13 V < VPORTP < 21 V
Iclass4	Class 4: Rclass 255 Ω (Note 3)	36	–	44	mA	13 V < VPORTP < 21 V
UVLO – INTERNAL SETTING – NCP1090/91/92						
Vuvlo_on	Default turn on voltage	–	37	40	V	VPORTP rising
Vuvlo_off	Default turn off voltage	29.6	31	–	V	VPORTP falling
Vhyst_int	UVLO internal hysteresis	–	6	–	V	
Uvlo_filter	UVLO On / Off filter time	–	100	–	μS	For information only
UVLO – EXTERNAL SETTING – NCP1091 ONLY						
Vuvlo_pr	UVLO external programming range	25	–	50	V	VPORTP rising
Vuvlo_on2	External UVLO turn on voltage	1.14	1.2	1.26	V	
Vhyst_off2	External UVLO turn off voltage	0.95	1	1.05	V	
Uvlo_ipd	UVLO internal pull down current	–	2.5	–	μA	
AUXILIARY SUPPLY SETTING – NCP1092 ONLY						
Aux_h	AUX input high level voltage	3.1	–		V	
Aux_l	AUX input low level voltage	–	–	0.6	V	
Aux_pd	AUX internal pull down resistor	100	–	–	KΩ	For information only

3. A tolerance of 1% on the Rclass resistor is included in the min/max values.

Table 3. OPERATING CONDITIONS (All values are with respect to VPORTN unless otherwise noted.)

Symbol	Parameter	Min	Typ	Max	Units	Conditions
PASS−SWITCH AND CURRENT LIMITING						
Ron	Pass−switch Rds−on	–	0.5	1	Ω	Measured with I(RTN) = 200 mA
I_inrush	Inrush current with Rinrush = 178 kΩ	75	120	170	mA	Measured at RTN−VPORTN = 3 V
I_ilim	Operating current limit with Rinrush = 178 kΩ	425	500	575	mA	Current limit threshold
POWER GOOD INDICATOR						
Vds_pgood_on	RTN−VPORTN threshold voltage required for power good status	0.8	1	1.2	V	RTN−VPORTN falling
Vds_pgood_off	RTN−VPORTN latchoff threshold voltage	9	10	11	V	RTN−VPORTN rising
Pgood_filter	PGOOD filter time		100		μS	Rising and falling / for information only
Ipgood	I(PGOOD) sinking current	–	–	5	mA	
Vpgood_low	PGOOD voltage output low	–	0.2	0.5	V	Voltage with respect to RTN
CURRENT CONSUMPTION						
IvportP	I(VPORTP) internal current consumption	–	600	900	μA	VPORTP = 48 V
THERMAL SHUTDOWN						
TSD	Thermal shutdown threshold	150	–	–	°C Tj	Tj = junction temperature
Thyst	Thermal hysteresis	–	15	–	°C Tj	Tj = junction temperature
THERMAL RATINGS						
Ta	Ambient temperature	−40	–	85	°C	
Tj	Junction temperature	–	–	125	°C	

3. A tolerance of 1% on the Rclass resistor is included in the min/max values.

Description of Operation

Powered Device Interface

The integrated PD interface supports the IEEE 802.3af defined operating modes: detection signature, current source classification, undervoltage lockout, inrush and operating current limits. The following sections give an overview of these previous processes.

Detection

During the detection phase, the incremental equivalent resistance seen by the PSE through the cable must be in the IEEE 802.3af standard specification range (23.70 kΩ to 26.30 kΩ) for a PSE voltage from 2.7 V to 10.1 V. In order to compensate for the non−linear effect of the diode bridge and satisfy the specification at low PSE voltage, the NCP1090/91/92 present a suitable impedance in parallel with the 24.9 kΩ Rdet external resistor. For some types of diodes (especially Schottky diodes), it may be necessary to adjust this external resistor.

The Rdet resistor has to be inserted between VPORTP and DET pins. During the detection phase, the DET pin is pulled to ground and goes in high impedance mode (open−drain) once the device exit this mode, reducing thus the current consumption on the cable.

Classification

Once the PSE device has detected the PD device, the classification process begins. In classification, the PD regulates a constant current source that is set by the external resistor RCLASS value on the CLASS pin. Figure 4 shows the schematic overview of the classification block. The current source is defined as:

$$Iclass = \frac{9.8\ V}{Rclass}$$

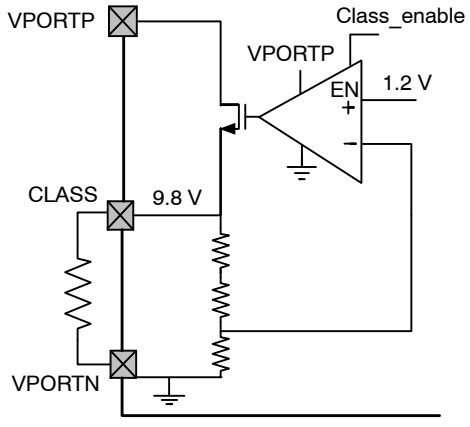

Figure 4. Classification Block Diagram

Power Mode

When the classification hand−shake is completed, the PSE and PD devices move into the operating mode.

Under Voltage Lock Out (UVLO)

The NCP1090/91/92 incorporate a fixed under voltage lock out (ULVO) circuit which monitors the input voltage and determines when to turn on the pass switch and charge the dc−dc converter input capacitor before the power up of the application.

The NCP1091 offers a fixed or adjustable Vuvlo_on threshold depending if the UVLO pin is used or not. In Figure 5, the UVLO pin is strapped to ground and the Vuvlo_on threshold is defined by the internal level.

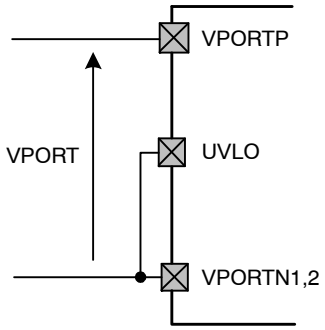

Figure 5. Default Internal UVLO Configuration (NCP1091 only)

To define the UVLO threshold externally, the ULVO pin must be connected to the center of an external resistor divider between VPORTP and VPORTN as shown in Figure 6.

In order to guarantee the detection signature, the equivalent input resistor made of the Ruvlo1, Ruvlo2 and Rdet should be equal to 24.9 kΩ.

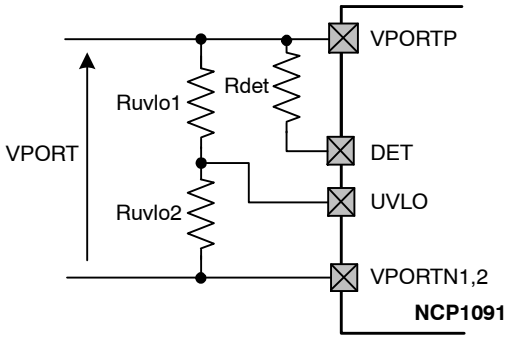

Figure 6. Default Internal UVLO Configuration (NCP1091 only)

For a Vuvlo_on desired turn−on voltage threshold, Ruvlo1 and Ruvlo2 can be calculated using the following equations:

$$Ruvlo = \frac{24.9\ k \cdot Rdet}{Rdet - 24.9\ k}$$

with $Ruvlo1 + Ruvlo2 = Ruvlo$

and $Ruvlo2 = \frac{1.2}{Vuvlo_on} \cdot Ruvlo$

With:

Vuvlo_on: Desired Turn−On voltage threshold

Example for a Targeted Uvlo_on of 35 V:

Let's start with a Rdet of 30.1 kΩ. This gives a Ruvlo of 144 kΩ made with a Ruvlo2 of 4.99 kΩ and a Ruvlo1 of 140 kΩ (closest values from E96 series). Note that there is a pull down current of 2.5 μA typ on the UVLO. Assuming the previous example, this pull down current will create a (non critical) systematic offset of 350 mV on the Uvlon_on level of 35 V.

The external UVLO hysteresis on the NCP1091 is about 15 percent typical.

Inrush and Operational Current Limitations

Both inrush and operational current limit are defined by an external Rinrush resistor connected between INRUSH and VPORTN. The low inrush current limit allows smooth charge of large dc−dc converter input capacitor by limiting the power dissipation over the internal pass switch. In power mode, the operational current limit protects the pass switch and the PD application against excessive transient current and failure on the dc−dc converter output.

Once the input supply reached the Vulvo_on level, the charge of Cpd capacitor starts with a current limitation set to to the INRUSH level. When this capacitor is fully charged, the current limit switches without any spikes from the inrush current to the operational current level and the power good indicator on PGOOD pin is turned on. The capacitor is considered to be fully charged once the following conditions are satisfied:

1. The drain−source voltage of the Pass Switch has decreased below the *Vds_pgood_on* level (typical 1 V)
2. The gate−source voltage of the Pass Switch is sufficiently high (above 2 V typical) which means the current in the pass switch has decreased below the current limit.

This mechanism is depicted in the following Figure 7.

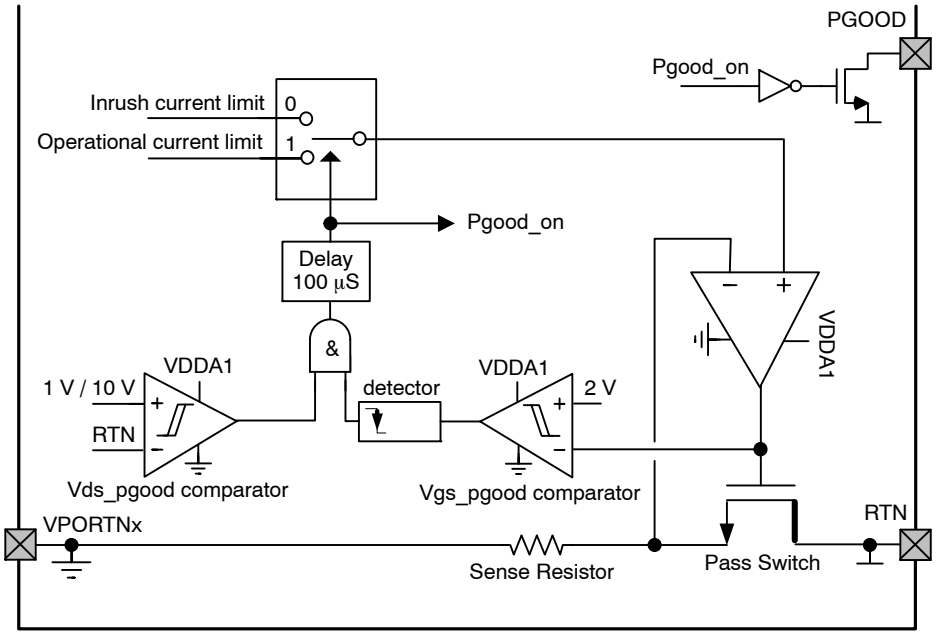

Figure 7. Inrush and Operational Current Limitation Selection Mechanism

The operational current limit and the power good indicator stays active as long as RTN voltage stays below the vds_pgood_off threshold (10 V typical) and the input supply stay above the Vulvo_off level. Therefore, fast and large voltage step lower than 10 V are tolerated on the input without interruption of the converter controller. Higher input transient will not affect the behavior if RTN does not exceed 10 V for more than 100 μS. Such input voltage steps may be introduced by a PSE which is switched to a higher power supply. In case RTN is still above 10 V after this delay, the power good is turned off and the pass switch current limit falls back to the inrush level.

PGOOD Indicator

The NCP1090/91/92 integrate a Power Good indicator circuitry indicating the end of the dc−dc converter input capacitor charge, and the enabling of the operational current limit. This indicator is implemented on the PGOOD pin which goes in open drain state when active and which is pulled to ground during turn off.

A possible usage of this PGOOD pin is illustrated in Figure 8. During the inrush phase, the converter controller is forced in standby mode due to the PGOOD pin forcing low the under voltage lock out pin of the controller. Once the Cpd capacitor is fully charged, PGOOD goes in open drain state, allowing the start up sequence of the converter controller.

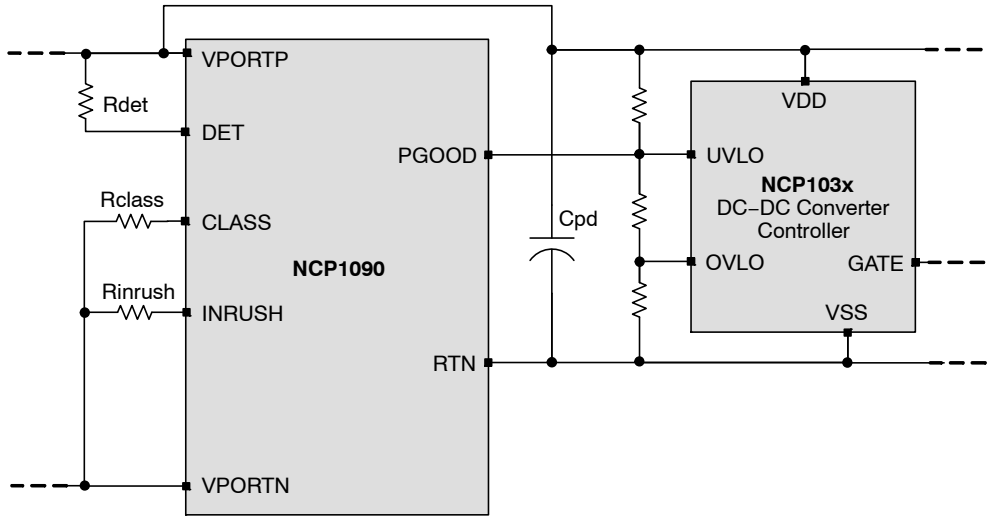

Figure 8. Power GOOD Implementation

Auxiliary Supply

To support application connected to non−PoE enabled networks and minimize the bill of materials, the NCP1093 supports drawing power from an external supply and allows simplified designs with PoE or auxiliary supply priorities.

In most of the cases, the auxiliary supply is connected between VPORTP and RTN with a serial diode between VPORTP and VAUX, as shown in Figure 9.

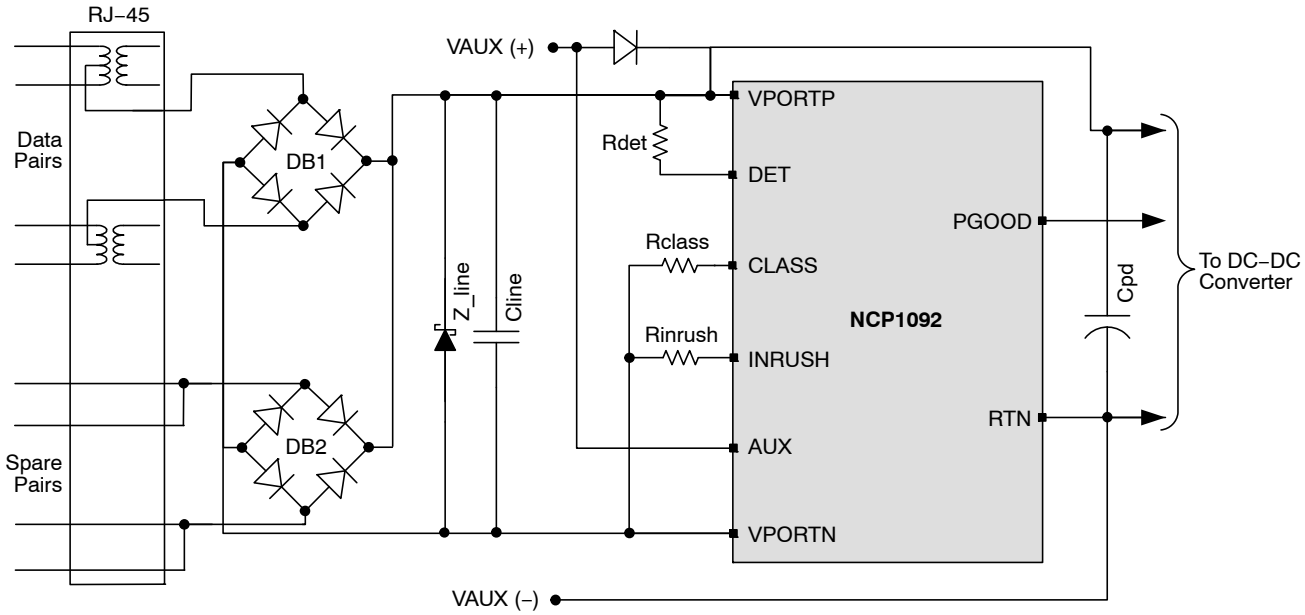

Figure 9. Auxiliary Supply Dominant PD Interface

The NCP1092 offers an AUX input pin which turns off the pass switch when pulled high. This feature is useful for PD applications where the auxiliary supply has to be dominant over the PoE supply. When the auxiliary supply is inserted on a POE powered application, the pass switch disconnection will move the current path from the PSE to the rear auxiliary supply. Since the current delivered by the PSE will goes below the DC MPS level (specified in IEEE 802.3 af/at standard), the PSE will disconnect the PoE−PD and the application will remain supplied by the auxiliary supply. The transition will happens without any power conversion interruption since the PGOOD indicator stays active (high impedance state).

Next Figure 10 depicts an other PD application where the POE supply is dominant over the VAUX supply. A diode D1 has been added in order to not corrupt the PD detection signature when the dc−dc converter is supplied by VAUX.

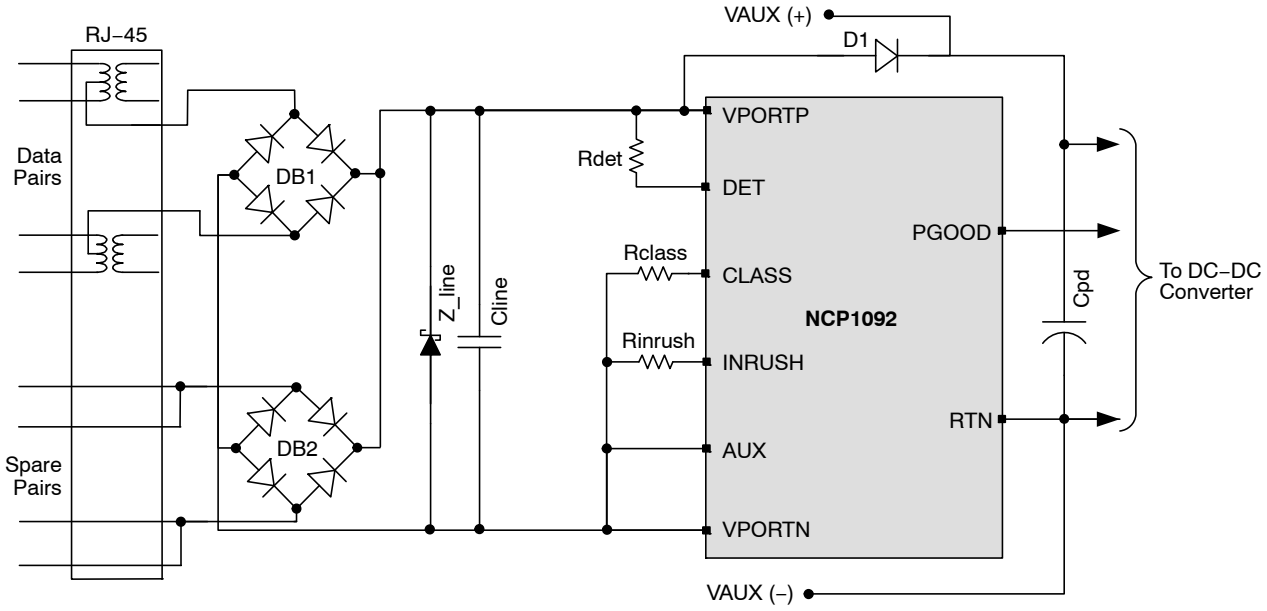

Figure 10. PoE Supply Dominant PD Interface

Thermal Shutdown

The NCP1090/91/92 include a thermal shutdown which protect the device in case of high junction temperature. Once the thermal shutdown (TSD) threshold is exceeded, the classification block, the pass switch and the PGOOD indicator are disabled. The NCP109X returns automatically to normal operation once the die temperature has fallen below the TSD low limit.

Company or Product Inquiries

For more information about ON Semiconductor's Power over Ethernet products visit our Web site at http://www.onsemi.com.

All brand names and product names appearing in this document are registered trademarks or trademarks of their respective holders.

MECHANICAL CASE OUTLINE
PACKAGE DIMENSIONS

ON Semiconductor®



SCALE 1:1

SOIC−8
CASE 751AZ
ISSUE B

DATE 18 MAY 2015

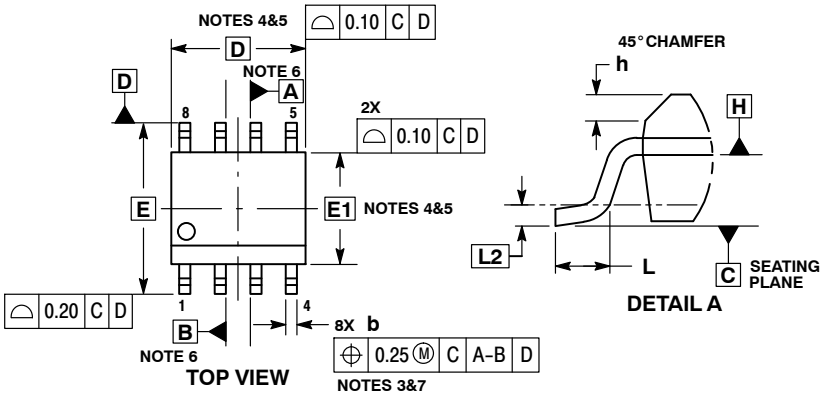

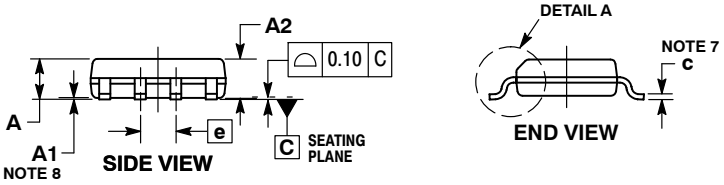

NOTES:
1. DIMENSIONING AND TOLERANCING PER ASME Y14.5M, 1994.
2. CONTROLLING DIMENSION: MILLIMETERS.
3. DIMENSION b DOES NOT INCLUDE DAMBAR PROTRUSION. ALLOWABLE PROTRUSION SHALL BE 0.004 mm IN EXCESS OF MAXIMUM MATERIAL CONDITION.
4. DIMENSION D DOES NOT INCLUDE MOLD FLASH, PROTRUSIONS OR GATE BURRS. MOLD FLASH, PROTRUSIONS OR GATE BURRS SHALL NOT EXCEED 0.006 mm PER SIDE. DIMENSION E1 DOES NOT INCLUDE INTERLEAD FLASH OR PROTRUSION. INTERLEAD FLASH OR PROTRUSION SHALL NOT EXCEED 0.010 mm PER SIDE.
5. THE PACKAGE TOP MAY BE SMALLER THAN THE PACKAGE BOTTOM. DIMENSIONS D AND E1 ARE DETERMINED AT THE OUTERMOST EXTREMES OF THE PLASTIC BODY AT DATUM H.
6. DIMENSIONS A AND B ARE TO BE DETERMINED AT DATUM H.
7. DIMENSIONS b AND c APPLY TO THE FLAT SECTION OF THE LEAD BETWEEN 0.10 TO 0.25 FROM THE LEAD TIP.
8. A1 IS DEFINED AS THE VERTICAL DISTANCE FROM THE SEATING PLANE TO THE LOWEST POINT ON THE PACKAGE BODY.

	MILLIMETERS	
DIM	MIN	MAX
A	---	1.75
A1	0.10	0.25
A2	1.25	---
b	0.31	0.51
c	0.10	0.25
D	4.90 BSC	
E	6.00 BSC	
E1	3.90 BSC	
e	1.27 BSC	
h	0.25	0.41
L	0.40	1.27
L2	0.25 BSC	

RECOMMENDED SOLDERING FOOTPRINT*

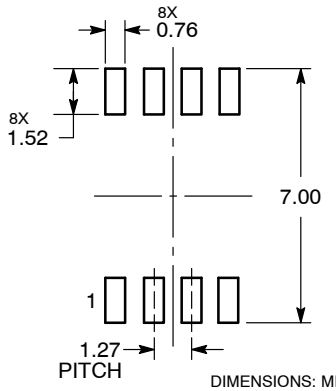

DIMENSIONS: MILLIMETERS

*For additional information on our Pb−Free strategy and soldering details, please download the ON Semiconductor Soldering and Mounting Techniques Reference Manual, SOLDERRM/D.

GENERIC MARKING DIAGRAM*

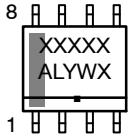

XXXXX = Specific Device Code
A = Assembly Location
L = Wafer Lot
Y = Year
W = Work Week
▪ = Pb−Free Package

*This information is generic. Please refer to device data sheet for actual part marking. Pb−Free indicator, “G”, may or not be present.

DOCUMENT NUMBER:	**98AON34918E**	Electronic versions are uncontrolled except when accessed directly from the Document Repository. Printed versions are uncontrolled except when stamped “CONTROLLED COPY” in red.
DESCRIPTION:	**SOIC−8**	**PAGE 1 OF 1**

ON Semiconductor and ON are trademarks of Semiconductor Components Industries, LLC dba ON Semiconductor or its subsidiaries in the United States and/or other countries. ON Semiconductor reserves the right to make changes without further notice to any products herein. ON Semiconductor makes no warranty, representation or guarantee regarding the suitability of its products for any particular purpose, nor does ON Semiconductor assume any liability arising out of the application or use of any product or circuit, and specifically disclaims any and all liability, including without limitation special, consequential or incidental damages. ON Semiconductor does not convey any license under its patent rights nor the rights of others.

© Semiconductor Components Industries, LLC, 2019

MECHANICAL CASE OUTLINE
PACKAGE DIMENSIONS

ON Semiconductor®

TSSOP−8
CASE 948S−01
ISSUE C

DATE 20 JUN 2008

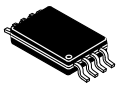

SCALE 2:1

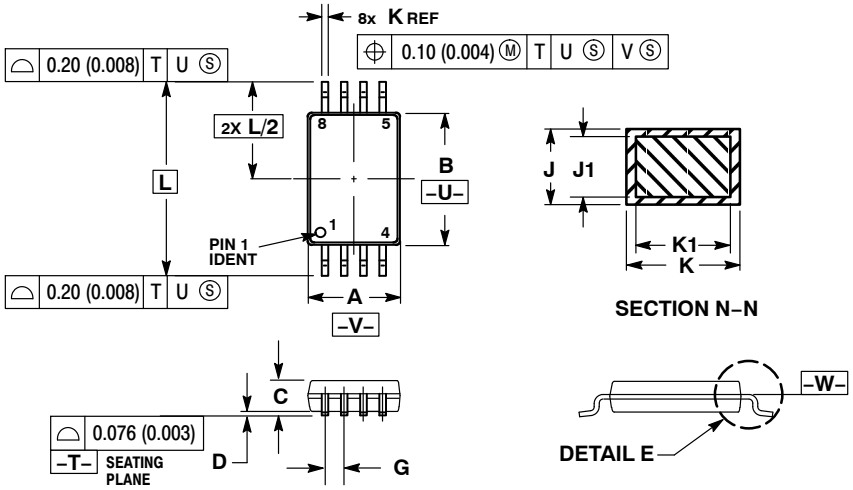

NOTES:
1. DIMENSIONING AND TOLERANCING PER ANSI Y14.5M, 1982.
2. CONTROLLING DIMENSION: MILLIMETER.
3. DIMENSION A DOES NOT INCLUDE MOLD FLASH. PROTRUSIONS OR GATE BURRS. MOLD FLASH OR GATE BURRS SHALL NOT EXCEED 0.15 (0.006) PER SIDE.
4. DIMENSION B DOES NOT INCLUDE INTERLEAD FLASH OR PROTRUSION. INTERLEAD FLASH OR PROTRUSION SHALL NOT EXCEED 0.25 (0.010) PER SIDE.
5. TERMINAL NUMBERS ARE SHOWN FOR REFERENCE ONLY.
6. DIMENSION A AND B ARE TO BE DETERMINED AT DATUM PLANE −W−.

	MILLIMETERS		INCHES	
DIM	MIN	MAX	MIN	MAX
A	2.90	3.10	0.114	0.122
B	4.30	4.50	0.169	0.177
C	---	1.10	---	0.043
D	0.05	0.15	0.002	0.006
F	0.50	0.70	0.020	0.028
G	0.65 BSC		0.026 BSC	
J	0.09	0.20	0.004	0.008
J1	0.09	0.16	0.004	0.006
K	0.19	0.30	0.007	0.012
K1	0.19	0.25	0.007	0.010
L	6.40 BSC		0.252 BSC	
M	0°	8°	0°	8°

GENERIC MARKING DIAGRAM*

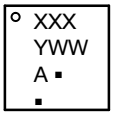

XXX = Specific Device Code
A = Assembly Location
Y = Year
WW = Work Week
▪ = Pb−Free Package

*This information is generic. Please refer to device data sheet for actual part marking. Pb−Free indicator, “G” or microdot “ ▪”, may or may not be present.

DOCUMENT NUMBER:	**98AON00697D**	Electronic versions are uncontrolled except when accessed directly from the Document Repository. Printed versions are uncontrolled except when stamped “CONTROLLED COPY” in red.
DESCRIPTION:	**TSSOP−8**	**PAGE 1 OF 1**

ON Semiconductor and ON are trademarks of Semiconductor Components Industries, LLC dba ON Semiconductor or its subsidiaries in the United States and/or other countries. ON Semiconductor reserves the right to make changes without further notice to any products herein. ON Semiconductor makes no warranty, representation or guarantee regarding the suitability of its products for any particular purpose, nor does ON Semiconductor assume any liability arising out of the application or use of any product or circuit, and specifically disclaims any and all liability, including without limitation special, consequential or incidental damages. ON Semiconductor does not convey any license under its patent rights nor the rights of others.

© Semiconductor Components Industries, LLC, 2019

onsemi, , and other names, marks, and brands are registered and/or common law trademarks of Semiconductor Components Industries, LLC dba "**onsemi**" or its affiliates and/or subsidiaries in the United States and/or other countries. **onsemi** owns the rights to a number of patents, trademarks, copyrights, trade secrets, and other intellectual property. A listing of **onsemi**'s product/patent coverage may be accessed at www.onsemi.com/site/pdf/Patent−Marking.pdf. **onsemi** reserves the right to make changes at any time to any products or information herein, without notice. The information herein is provided "as−is" and **onsemi** makes no warranty, representation or guarantee regarding the accuracy of the information, product features, availability, functionality, or suitability of its products for any particular purpose, nor does **onsemi** assume any liability arising out of the application or use of any product or circuit, and specifically disclaims any and all liability, including without limitation special, consequential or incidental damages. Buyer is responsible for its products and applications using **onsemi** products, including compliance with all laws, regulations and safety requirements or standards, regardless of any support or applications information provided by **onsemi**. "Typical" parameters which may be provided in **onsemi** data sheets and/or specifications can and do vary in different applications and actual performance may vary over time. All operating parameters, including "Typicals" must be validated for each customer application by customer's technical experts. **onsemi** does not convey any license under any of its intellectual property rights nor the rights of others. **onsemi** products are not designed, intended, or authorized for use as a critical component in life support systems or any FDA Class 3 medical devices or medical devices with a same or similar classification in a foreign jurisdiction or any devices intended for implantation in the human body. Should Buyer purchase or use **onsemi** products for any such unintended or unauthorized application, Buyer shall indemnify and hold **onsemi** and its officers, employees, subsidiaries, affiliates, and distributors harmless against all claims, costs, damages, and expenses, and reasonable attorney fees arising out of, directly or indirectly, any claim of personal injury or death associated with such unintended or unauthorized use, even if such claim alleges that **onsemi** was negligent regarding the design or manufacture of the part. **onsemi** is an Equal Opportunity/Affirmative Action Employer. This literature is subject to all applicable copyright laws and is not for resale in any manner.

ADDITIONAL INFORMATION

TECHNICAL PUBLICATIONS:
Technical Library: www.onsemi.com/design/resources/technical−documentation
onsemi Website: www.onsemi.com

ONLINE SUPPORT: www.onsemi.com/support
For additional information, please contact your local Sales Representative at www.onsemi.com/support/sales