High Speed Dual-Channel, Bi-Directional Ceramic Digital Isolator

NCID9210 / NCID9216



SOIC16 W
CASE 751EN

Description

The NCID9210 and NCID9216 are galvanically isolated full duplex, bi−directional, high−speed dual−channel digital isolators. These devices support isolated communications thereby allowing digital signals to communicate between systems without conducting ground loops or hazardous voltages.

They utilize **onsemi's** patented galvanic off−chip capacitor isolation technology and optimized IC design to achieve high insulation and high noise immunity, characterized by high common mode rejection and power supply rejection specifications. The thick ceramic substrate yields capacitors with ~25 times the thickness of thin film on−chip capacitors and coreless transformers. The result is a combination of the electrical performance benefits that digital isolators offer with the safety reliability of a >0.5 mm insulator barrier similar to what has historically been offered by optocouplers.

The device is housed in a 16−pin wide body small outline package.

Features

- Off−Chip Capacitive Isolation to Achieve Reliable High Voltage Insulation
  - DTI (Distance Through Insulation): ≥ 0.5 mm
  - Maximum Working Insulation Voltage: 2000 V_{peak}
- Full Duplex, Bi−directional Communication
- 100 kV/μs Minimum Common Mode Rejection
- High Speed:
  - 50 Mbit/s Data Rate (NRZ)
  - 25 ns Maximum Propagation Delay
  - 10 ns Maximum Pulse Width Distortion
- 8 mm Creepage and Clearance Distance to Achieve Reliable High Voltage Insulation.
- Specifications Guaranteed Over 2.5 V to 5.5 V Supply Voltage and −40°C to 125°C Extended Temperature Range
- Over Temperature Detection
- NCIV Prefix for Automotive and Other Applications Requiring Unique Site and Control Change Requirements; AEC−Q100 Qualified and PPAP Capable (Pending)
- Safety and Regulatory Approvals
  - UL1577, 5000 V_{RMS} for 1 Minute
  - DIN EN/IEC 60747−17 (Pending)

MARKING DIAGRAM

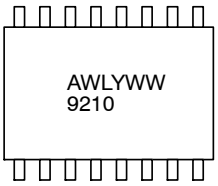

A = Assembly Location
WL = Wafer Lot
Y = Year
WW = Work Week
9210/9216 = Specific Device Code

ORDERING INFORMATION

See detailed ordering and shipping information on page 11 of this data sheet.

Typical Applications

- Isolated PWM Control
- Industrial Fieldbus Communications
- Microprocessor System Interface (SPI, I^2C, etc.)
- Programmable Logic Control
- Isolated Data Acquisition System
- Voltage Level Translator

© Semiconductor Components Industries, LLC, 2020

PIN CONFIGURATION

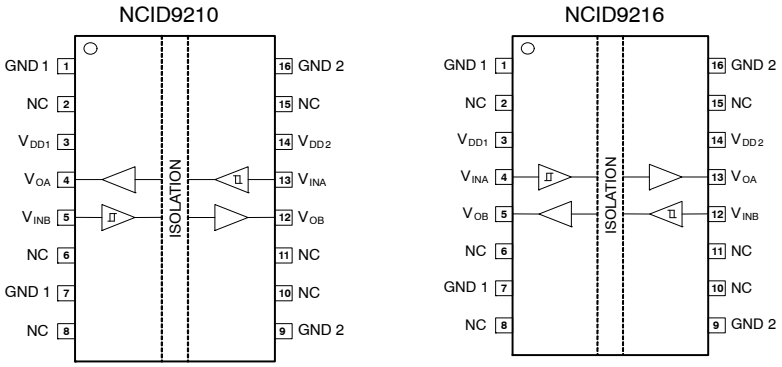

Figure 1. Pin and Channel Configuration

BLOCK DIAGRAM

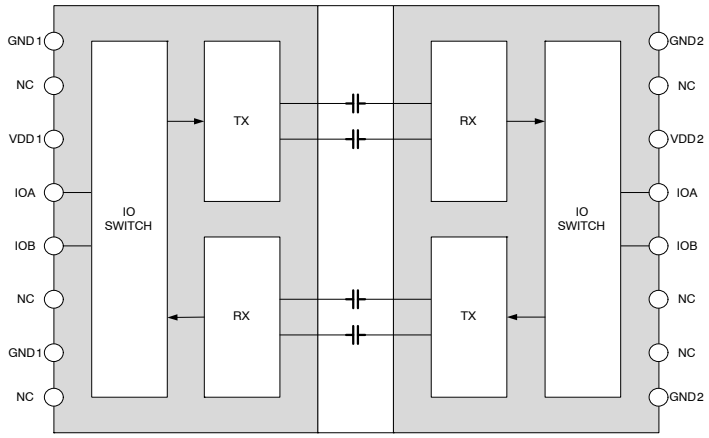

Figure 2. Functional Block Diagram

PIN DEFINITIONS

Name	Pin No. NCID9210	Pin No. NCID9216	Description
GND1	1	1	Ground, Primary Side
NC	2	2	No Connect
V_{DD1}	3	3	Power Supply, Primary Side
V_{OA}	4	13	Output, Channel A
V_{INB}	5	12	Input, Channel B
NC	6	6	No Connect
GND1	7	7	Ground, Primary Side
NC	8	8	No Connect
GND2	9	9	Ground, Secondary Side
NC	10	10	No Connect
NC	11	11	No Connect
V_{OB}	12	5	Output, Channel B
V_{INA}	13	4	Input, Channel A
V_{DD2}	14	14	Power Supply, Secondary Side

PIN DEFINITIONS

NC	15	15	No Connect
GND2	16	16	Ground, Secondary Side

TRUTH TABLE (Note 1)

V_{INX}	V_{DDI}	V_{DDO}	V_{OX}	Comment
H	Power Up	Power Up	H	Normal Operation
L	Power Up	Power Up	L	Normal Operation
NC	Power Up	Power Up	L	Default Low
X	Power Down	Power Up	L	Default low; V_{OX} return to normal operation when V_{DDI} change to Power Up
X	Power Up	Power Down	Undetermined(Note 2)	V_{OX} return to normal operation when V_{DDO} change to Power Up

1. V_{INX} = Input signal of a given channel (A or B). V_{OX} = Output signal of a given channel (A or B). V_{DDI} = Input−side V_{DD}. V_{DDO} = Output−side V_{DD}. X = Irrelevant. H = High level. L = Low level. NC = No Connection.
2. The outputs are in undetermined state when $V_{DDO} < V_{UVLO}$.

SAFETY AND INSULATION RATINGS

As per DIN EN/IEC 60747−17, this digital isolator is suitable for “safe electrical insulation” only within the safety limit data. Compliance with the safety ratings must be ensured by means of protective circuits.

Symbol	Parameter		Min	Typ	Max	Unit
	Installation Classifications per DIN VDE 0110/1.89 Table 1 Rated Mains Voltage	< 150 V_{RMS}		I–IV		
		< 300 V_{RMS}		I–IV		
		< 450 V_{RMS}		I–IV		
		< 600 V_{RMS}		I–IV		
		< 1000 V_{RMS}		I–III		
	Climatic Classification			40/125/21		
	Pollution Degree (DIN VDE 0110/1.89)			2		
CTI	Comparative Tracking Index (DIN IEC 112/VDE 0303 Part 1)		600			
V_{PR}	Input−to−Output Test Voltage, Method b, V_{IORM} x 1.875 = V_{PR}, 100% Production Test with t_m = 1 s, Partial Discharge < 5 pC		3750			V_{peak}
	Input−to−Output Test Voltage, Method a, V_{IORM} x 1.6 = V_{PR}, Type and Sample Test with t_m = 10 s, Partial Discharge < 5 pC		3200			V_{peak}
V_{IORM}	Maximum Working Insulation Voltage		2000			V_{peak}
V_{IOTM}	Highest Allowable Over Voltage		8000			V_{peak}
E_{CR}	External Creepage		8.0			mm
E_{CL}	External Clearance		8.0			mm
DTI	Insulation Thickness		0.50			mm
T_{Case}	Safety Limit Values – Maximum Values in Failure; Case Temperature		150			°C
$P_{S,INPUT}$	Safety Limit Values – Maximum Values in Failure; Input Power		350			mW
$P_{S,OUTPUT}$	Safety Limit Values – Maximum Values in Failure; Output Power		350			mW
R_{IO}	Insulation Resistance at TS, V_{IO} = 500 V		10^9			Ω

ABSOLUTE MAXIMUM RATINGS (T_A = 25°C unless otherwise specified)

Symbol	Parameter	Value	Unit
T_{STG}	Storage Temperature	−55 to +150	°C
T_{OPR}	Operating Temperature	−40 to +125	°C
T_J	Junction Temperature	−40 to +150	°C
T_{SOL}	Lead Solder Temperature (Refer to Reflow Temperature Profile)	260 for 10sec	°C
V_{DD}	Supply Voltage (V_{DDx})	−0.5 to 6	V
V	Voltage (V_{INx}, V_{Ox})	−0.5 to 6	V
I_O	Average Output Current	15	mA
PD	Power Dissipation	210	mW

Stresses exceeding those listed in the Maximum Ratings table may damage the device. If any of these limits are exceeded, device functionality should not be assumed, damage may occur and reliability may be affected.

RECOMMENDED OPERATING CONDITIONS

Symbol	Parameter	Min	Max	Unit
T_A	Ambient Operating Temperature	−40	+125	°C
V_{DD1} V_{DD2}	Supply Voltage (Notes 3, 4)	2.5	5.5	V
V_{INH}	High Level Input Voltage	0.7 x V_{DDI}	V_{DDI}	V
V_{INL}	Low Level Input Voltage	0	0.1 x V_{DDI}	V
V_{UVLO+}	Supply Voltage UVLO Rising Threshold	2.2		V
V_{UVLO-}	Supply Voltage UVLO Falling Threshold	2.0		V
$UVLO_{HYS}$	Supply Voltage UVLO Hysteresis	0.1		V
I_{OH}	High Level Output Current	−2	−	mA
I_{OL}	Low Level Output Current	−	2	mA
DR	Signaling Rate	0	50	Mbps

Functional operation above the stresses listed in the Recommended Operating Ranges is not implied. Extended exposure to stresses beyond the Recommended Operating Ranges limits may affect device reliability.

3. During power up or down, ensure that both the input and output supply voltages reach the proper recommended operating voltages to avoid any momentary instability at the output state.
4. For reliable operation at recommended operating conditions, V_{DD} supply pins require at least a pair of external bypass capacitors, placed within 2 mm from V_{DD} pins 3 and 14 and GND pins 1 and 16. Recommended values are 0.1 μF and 1 μF.

ISOLATION CHARACTERISTICS

Apply over all recommended conditions. All typical values are measured at T_A = 25°C.

Symbol	Parameter	Conditions	Min	Typ	Max	Unit
V_{ISO}	Input−Output Isolation Voltage	T_A = 25°C, Relative Humidity < 50%, t = 1.0 minute, $I_{I-O} \leq$ 10 μA, 50 Hz (Notes 5, 6, 7)	5000			V_{RMS}
R_{ISO}	Isolation Resistance	V_{I-O} = 500 V (Note 5)		10^{11}		
C_{ISO}	Isolation Capacitance	V_{I-O} = 0 V, Frequency = 1.0 MHz (Note 5)		1		pF

5. Device is considered a two−terminal device: pins 1 to 8 are shorted together and pins 9 to 16 are shorted together.
6. 5,000 V_{RMS} for 1−minute duration is equivalent to 6,000 V_{RMS} for 1−second duration.
7. The input−output isolation voltage is a dielectric voltage rating per UL1577. It should not be regarded as an input−output continuous voltage rating. For the continuous working voltage rating, refer to equipment−level safety specification or DIN EN/IEC 60747−17 Safety and Insulation Ratings Table on page 3.

ELECTRICAL CHARACTERISTICS

Apply over all recommended conditions, T_A =−40°C to +125°C, V_{DD1} = V_{DD2} = 2.5 V to 5.5 V, unless otherwise specified. All typical values are measured at T_A = 25°C.

Symbol	Parameter	Conditions	Min	Typ	Max	Unit	Figure
V_{OH}	High Level Output Voltage	I_{OH} = −4 mA	V_{DDO} − 0.4	V_{DDO} − 0.1		V	7
V_{OL}	Low Level Output Voltage	I_{OL} = 4 mA		0.11	0.4	V	8
V_{INT+}	Rising Input Voltage Threshold				0.7 x V_{DDI}	V	
V_{INT-}	Falling Input Voltage Threshold		0.1 x V_{DDI}			V	
$V_{INT(HYS)}$	Input Threshold Voltage Hysteresis		0.1 x V_{DDI}	0.2 x V_{DDI}		V	
I_{INH}	High Level Input Current	V_{IH} = V_{DDI}			1	μA	
I_{INL}	Low Level Input Current	V_{IL} = 0 V	−1			μA	
CMTI	Common Mode Transient Immunity	V_I = V_{DDI} or 0 V, V_{CM} = 1500 V	100	150		kV/μs	10
C_{IN}	Input Capacitance	V_{IN} = V_{DDI}/2 + 0.4 x sin (2πft), f = 1 MHz, V_{DD} = 5 V		2		pF	

Product parametric performance is indicated in the Electrical Characteristics for the listed test conditions, unless otherwise noted. Product performance may not be indicated by the Electrical Characteristics if operated under different conditions.

SUPPLY CURRENT CHARACTERISTICS

Apply over all recommended conditions, T_A =−40°C to +125°C unless otherwise specified. All typical values are measured at T_A = 25°C.

Symbol	Parameter	Conditions	Min	Typ	Max	Unit	Figure
I_{DD1}	DC Supply Current Input Low	V_{DD} = 5 V, V_{IN} = 0 V		4.5	6.3	mA	
I_{DD2}				5.0			
I_{DD1}		V_{DD} = 3.3 V, V_{IN} = 0 V		4.4	6.1		
I_{DD2}				4.9			
I_{DD1}		V_{DD} = 2.5 V, V_{IN} = 0 V		4.3	6		
I_{DD2}				4.8			
I_{DD1}	DC Supply Current Input High	V_{DD} = 5 V, V_{IN} = 5 V		11.8	14.5	mA	
I_{DD2}				12.1			
I_{DD1}		V_{DD} = 3.3 V, V_{IN} = 3.3 V		11.7	14.3		
I_{DD2}				11.9			
I_{DD1}		V_{DD} = 2.5 V, V_{IN} = 2.5 V		11.6	14.3		
I_{DD2}				11.8			
I_{DD1}	AC Supply Current 1 Mbps	V_{DD} = 5 V, C_L = 15 pF V_{IN} = 5 V Square Wave		8.3	10.5	mA	3,4
I_{DD2}				8.7			
I_{DD1}		V_{DD} = 3.3 V, C_L = 15 pF V_{IN} = 3.3 V Square Wave		8.1	10.3		
I_{DD2}				8.5			
I_{DD1}		V_{DD} = 2.5 V, C_L = 15 pF V_{IN} = 2.5 V Square Wave		8.0	10.1		
I_{DD2}				8.4			
I_{DD1}	AC Supply Current 10 Mbps	V_{DD} = 5 V, C_L = 15 pF V_{IN} = 5 V Square Wave		9.9	12	mA	
I_{DD2}				10.2			
I_{DD1}		V_{DD} = 3.3 V, C_L = 15 pF V_{IN} = 3.3 V Square Wave		8.9	11		
I_{DD2}				9.3			
I_{DD1}		V_{DD} = 2.5 V, C_L = 15 pF V_{IN} = 2.5 V Square Wave		8.6	10.5		
I_{DD2}				9.0			
I_{DD1}	AC Supply Current 50 Mbps	V_{DD} = 5 V, C_L = 15 pF V_{IN} = 5 V Square Wave		14.8	17.5	mA	
I_{DD2}				15.2			
I_{DD1}		V_{DD} = 3.3 V, C_L = 15 pF V_{IN} = 3.3 V Square Wave		12.1	14.3		
I_{DD2}				12.6			
I_{DD1}		V_{DD} = 2.5 V, C_L = 15 pF V_{IN} = 2.5 V Square Wave		11.1	13		
I_{DD2}				11.6			

SWITCHING CHARACTERISTICS

Apply over all recommended conditions, T_A =−40°C to +125°C unless otherwise specified. All typical values are measured at T_A = 25°C.

Symbol	Parameter	Conditions	Min	Typ	Max	Unit	Figure
t_{PHL}	Propagation Delay to Logic Low Output (Note 8)	V_{DD} = 5 V, V_{IN} Square Wave, C_L = 15 pF		17.0	25	ns	6,9
		V_{DD} = 3.3 V, V_{IN} Square Wave, C_L = 15 pF		18.3			
		V_{DD} = 2.5 V, V_{IN} Square Wave, C_L = 15 pF		20.0			
t_{PLH}	Propagation Delay to Logic High Output (Note 9)	V_{DD} = 5 V, V_{IN} Square Wave, C_L = 15 pF		13.0	25	ns	
		V_{DD} = 3.3 V, V_{IN} Square Wave, C_L = 15 pF		14.5			
		V_{DD} = 2.5 V, V_{IN} Square Wave, C_L = 15 pF		16.0			
PWD	Pulse Width Distortion $\lvert t_{PHL} - t_{PLH} \rvert$ (Note 10)	V_{DD} = 5 V, V_{IN} Square Wave, C_L = 15 pF		3.6	10	ns	
		V_{DD} = 3.3 V, V_{IN} Square Wave, C_L = 15 pF		3.8			
		V_{DD} = 2.5 V, V_{IN} Square Wave, C_L = 15 pF		3.8			
$t_{PSK(PP)}$	Propagation Delay Skew (Part to Part) (Note 11)	V_{DD} = 5 V, V_{IN} Square Wave, C_L = 15 pF	−10		10	ns	
		V_{DD} = 3.3 V, V_{IN} Square Wave, C_L = 15 pF					
		V_{DD} = 2.5 V, V_{IN} Square Wave, C_L = 15 pF					
t_R	Output Rise Time (10% to 90%)	V_{DD} = 5 V, V_{IN} Square Wave, C_L = 15 pF		1.1		ns	
		V_{DD} = 3.3 V, V_{IN} Square Wave, C_L = 15 pF		1.5			
		V_{DD} = 2.5 V, V_{IN} Square Wave, C_L = 15 pF		2.2			
t_F	Output Fall Time (90% to 10%)	V_{DD} = 5 V, V_{IN} Square Wave, C_L = 15 pF		1.1		ns	
		V_{DD} = 3.3 V, V_{IN} Square Wave, C_L = 15 pF		1.4			
		V_{DD} = 2.5 V, V_{IN} Square Wave, C_L = 15 pF		3.0			

8. Propagation delay t_{PHL} is measured from the 50% level of the falling edge of the input pulse to the 50% level of the falling edge of the V_O signal.
9. Propagation delay t_{PLH} is measured from the 50% level of the rising edge of the input pulse to the 50% level of the rising edge of the V_O signal.
10. PWD is defined as $\lvert t_{PHL} - t_{PLH} \rvert$ for any given device.
11. Part−to−part propagation delay skew is the difference between the measured propagation delay times of a specified channel of any two parts at identical operating conditions and equal load.

TYPICAL PERFORMANCE CHARACTERISTICS

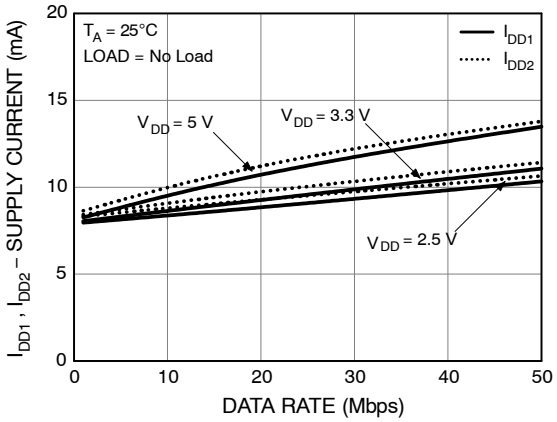

Figure 3. Supply Current vs. Data Rate (No Load)

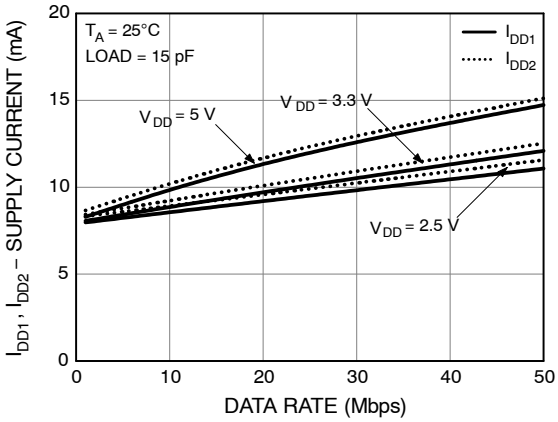

Figure 4. Supply Current vs. Data Rate (Load = 15 pF)

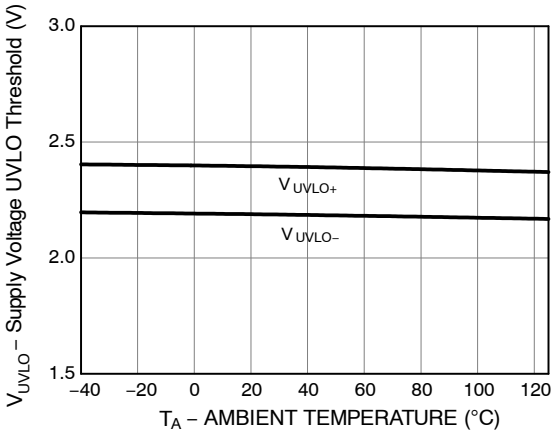

Figure 5. Supply Voltage UVLO Threshold vs. Ambient Temperature

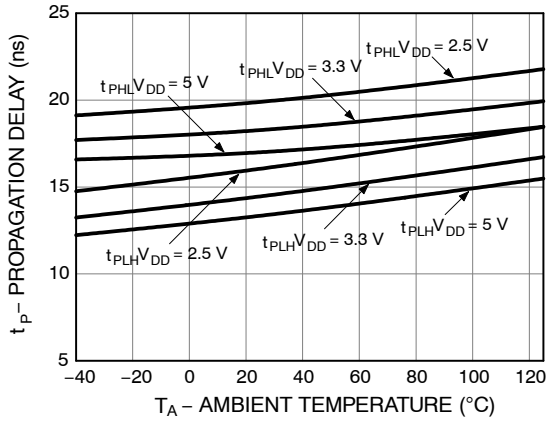

Figure 6. Propagation Delay vs. Ambient Temperature

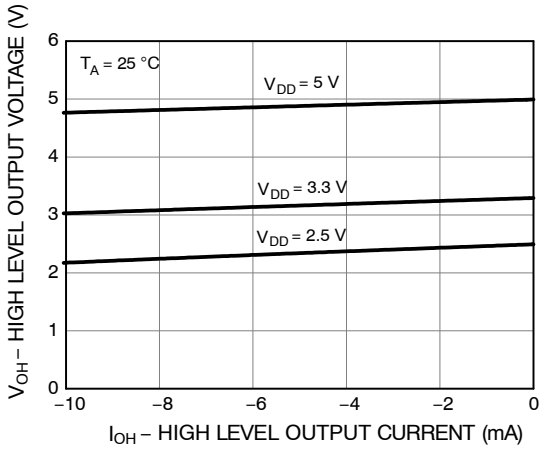

Figure 7. High Level Output Voltage vs. Current

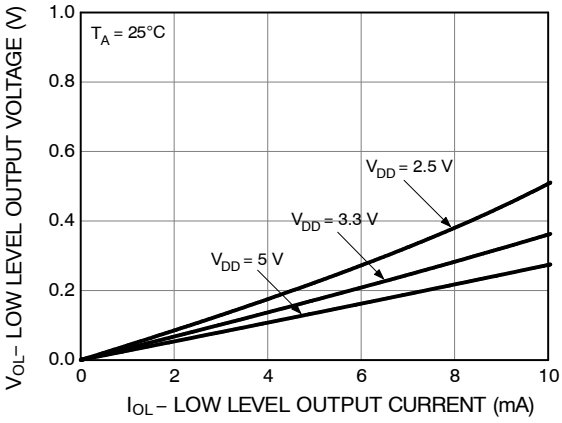

Figure 8. Low Level Output Voltage vs. Current

TEST CIRCUITS

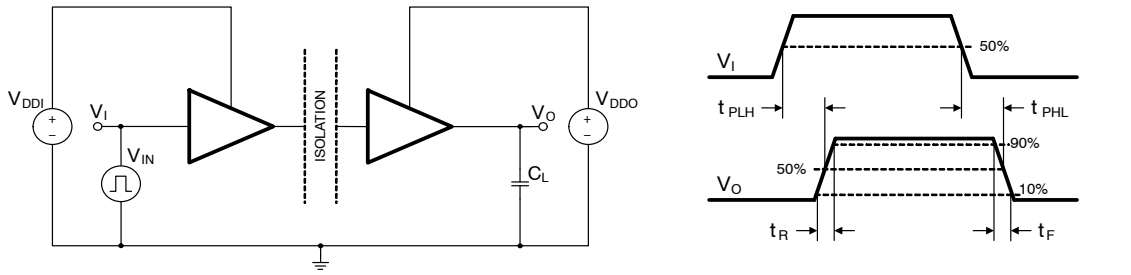

Figure 9. V_{IN} to V_O Propagation Delay Test Circuit and Waveform

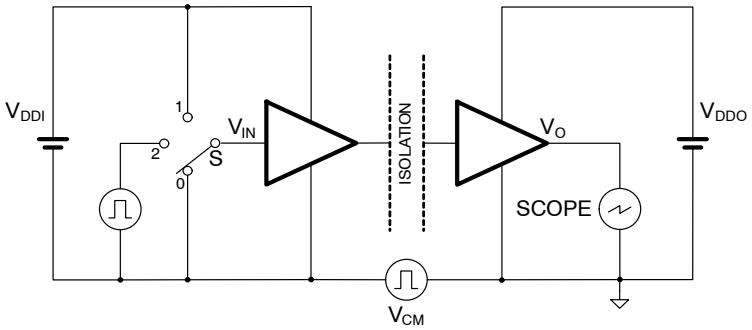

S at 0, V_O remain consistently low
S at 1, V_O remain consistently high
S at 2, V_O data same as V_{IN} data

Figure 10. Common Mode Transient Immunity Test Circuit

APPLICATIONS INFORMATION

Theory of Operation

NCID9210 and NCID9216 are dual−channel digital isolators that enable bi−directional communication between two isolated circuits. They use off−chip ceramic capacitors that serve both as the isolation barrier and as the medium of transmission for signal switching using On−Off keying (OOK) technique, illustrated in the single channel operational block diagram in Figure 11.

At the transmitter side, the V_{IN} input logic state is modulated with a high frequency carrier signal. The resulting signal is amplified and transmitted to the isolation barrier. The receiver side detects the barrier signal and demodulates it using an envelope detection technique. The output signal determines the V_O output logic state. V_O is at default state low when the power supply at the transmitter side is turned off or the input V_{IN} is disconnected.

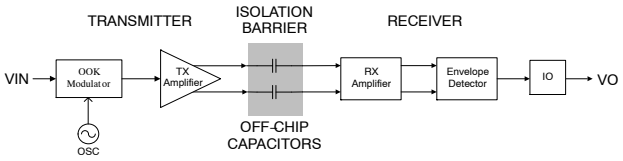

Figure 11. Operational Block Diagram of Single Channel

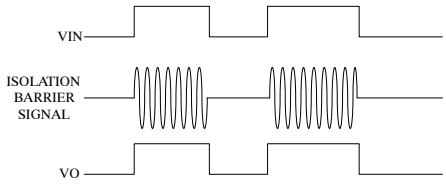

Figure 12. On−Off Keying Modulation Signals

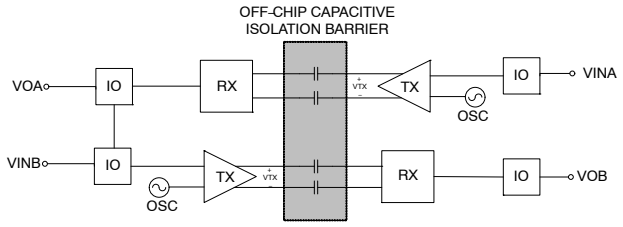

Figure 13. NCID9210 Operational Block Diagram

Layout Recommendation

Layout of the digital circuits relies on good suppression of unwanted noise and electromagnetic interference. It is recommended to use 4−layer FR4 PCB, with ground plane below the components, power plane below the ground plane, signal lines and power fill on top, and signal lines and ground fill at the bottom. The alternating polarities of the layers creates interplane capacitances that aids the bypass capacitors required for reliable operation at digital switching rates.

In the layout with digital isolators, it is required that the isolated circuits have separate ground and power planes. The section below the device should be clear with no power, ground or signal traces. Maintain a gap equal to or greater than the specified minimum creepage clearance of the device package.

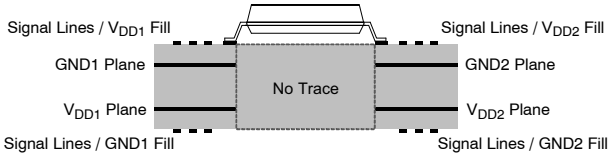

Figure 14. 4−Layer PCB for Digital Isolator

For NCID9210 and NCID9216, it is highly advised to connect at least a pair of low ESR supply bypass capacitors, placed within 2 mm from the power supply pins 3 and 14 and ground pins 1 and 16. Recommended values are 1 μF and 0.1 μF, respectively. Place them between the V_{DD} pins of the device and the via to the power planes, with the higher frequency, lower value capacitor closer to the device pins. Directly connect the device ground pins 1, 7, 9 and 16 by via to their corresponding ground planes.

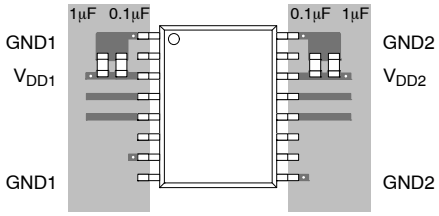

Figure 15. Placement of Bypass Capacitors

Over Temperature Detection

NCID9210 and NCID9216 have built−in Over Temperature Detection (OTD) feature that protects the IC from thermal damage. The output pins will automatically switch to default state when the ambient temperature exceeds the maximum junction temperature at threshold of approximately 160°C. The device will return to normal operation when the temperature decreases approximately 20°C below the OTD threshold.

ORDERING INFORMATION

Part Number	Grade	Package	Shipping†
NCID9210	Industrial	SOIC16 W	50 Units / Tube
NCID9210R2	Industrial	SOIC16 W	750 / Tape & Reel
NCID9216 (pending)	Industrial	SOIC16 W	50 Units / Tube
NCID9216R2 (pending)	Industrial	SOIC16 W	750 / Tape & Reel
NCIV9210* (pending)	Automotive	SOIC16 W	50 Units / Tube
NCIV9210R2* (pending)	Automotive	SOIC16 W	750 / Tape & Reel
NCIV9216* (pending)	Automotive	SOIC16 W	50 Units / Tube
NCIV9216R2* (pending)	Automotive	SOIC16 W	750 / Tape & Reel

†For information on tape and reel specifications, including part orientation and tape sizes, please refer to our Tape and Reel Packaging Specification Brochure, BRD8011/D.

*NCIV Prefix for Automotive and Other Applications Requiring Unique Site and Control Change Requirements; AEC – Q100 Qualified and PPAP Capable.

MECHANICAL CASE OUTLINE
PACKAGE DIMENSIONS

ON Semiconductor®

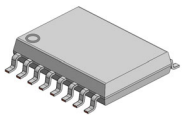

SOIC16 W
CASE 751EN
ISSUE A

DATE 24 AUG 2021

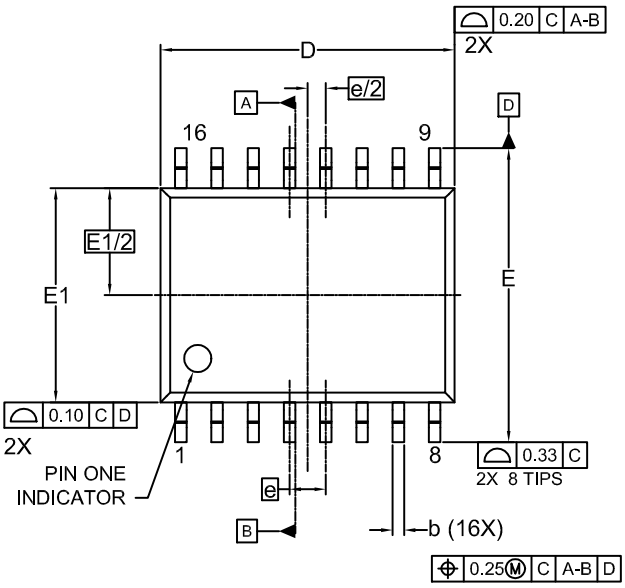

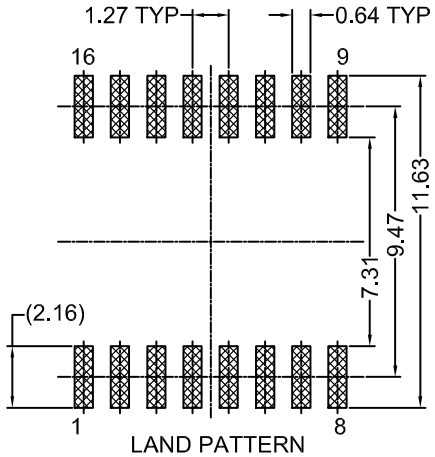

LAND PATTERN
RECOMMENDATION

*FOR ADDITIONAL INFORMATION ON OUR PB-FREE STRATEGY AND SOLDERING DETAILS, PLEASE DOWNLOAD THE ON SEMICONDUCTOR SOLDERING AND MOUNTING TECHNIQUES REFERENCE MANUAL, SOLDERRM/D.

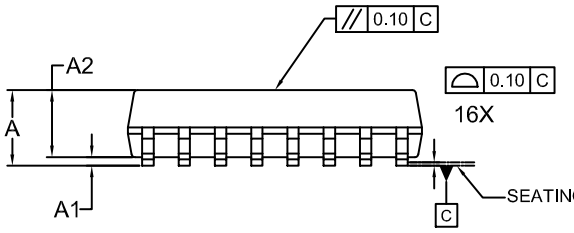

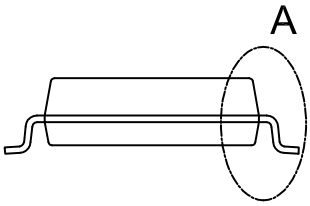

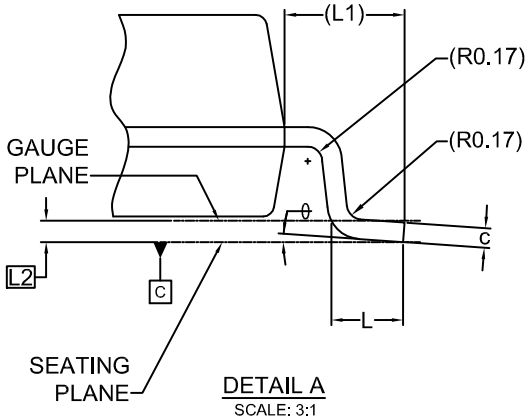

DETAIL A
SCALE: 3:1

DIM	MILLIMETER		
	MIN.	NOM.	MAX.
A	–	–	3.00
A1	0.15	0.30	0.45
A2	2.25	2.35	2.45
b	0.31	0.41	0.51
c	0.19	0.22	0.25
D	10.20	10.30	10.40
E	10.10	10.30	10.50
E1	7.40	7.50	7.60
E1/2	3.75 BSC		
e	1.27 BSC		
e/2	0.635 BSC		
L	0.40	0.84	1.27
L1	1.42 REF		
L2	0.25 BSC		
θ	0°	–	8°

NOTES: UNLESS OTHERWISE SPECIFIED

A) DRAWING REFERS TO JEDEC MS-013, VARIATION AA.
B) ALL DIMENSIONS ARE IN MILLIMETERS.
C) DIMENSIONS ARE EXCLUSIVE OF BURRS, MOLD FLASH AND TIE BAR PROTRUSIONS
D) DRAWING CONFORMS TO ASME Y14.5M-1994
E) LAND PATTERN STANDARD: SOIC127P1030X275-16N
F) DRAWING FILE NAME: MKT-M16FREV2
G) OPTOCOUPLER COMES IN WHITE MOLD BODY.

GENERIC MARKING DIAGRAM*

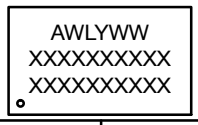

XXXX = Specific Device Code
A = Assembly Location
WL = Wafer Lot
Y = Year
WW = Work Week

*This information is generic. Please refer to device data sheet for actual part marking. Pb−Free indicator, “G” or microdot “▪”, may or may not be present. Some products may not follow the Generic Marking.

DOCUMENT NUMBER:	**98AON13751G**	Electronic versions are uncontrolled except when accessed directly from the Document Repository. Printed versions are uncontrolled except when stamped “CONTROLLED COPY” in red.
DESCRIPTION:	**SOIC16 W**	**PAGE 1 OF 1**

ON Semiconductor and ON are trademarks of Semiconductor Components Industries, LLC dba ON Semiconductor or its subsidiaries in the United States and/or other countries. ON Semiconductor reserves the right to make changes without further notice to any products herein. ON Semiconductor makes no warranty, representation or guarantee regarding the suitability of its products for any particular purpose, nor does ON Semiconductor assume any liability arising out of the application or use of any product or circuit, and specifically disclaims any and all liability, including without limitation special, consequential or incidental damages. ON Semiconductor does not convey any license under its patent rights nor the rights of others.

© Semiconductor Components Industries, LLC, 2019

onsemi, , and other names, marks, and brands are registered and/or common law trademarks of Semiconductor Components Industries, LLC dba "**onsemi**" or its affiliates and/or subsidiaries in the United States and/or other countries. **onsemi** owns the rights to a number of patents, trademarks, copyrights, trade secrets, and other intellectual property. A listing of **onsemi**'s product/patent coverage may be accessed at www.onsemi.com/site/pdf/Patent−Marking.pdf. **onsemi** reserves the right to make changes at any time to any products or information herein, without notice. The information herein is provided "as−is" and **onsemi** makes no warranty, representation or guarantee regarding the accuracy of the information, product features, availability, functionality, or suitability of its products for any particular purpose, nor does **onsemi** assume any liability arising out of the application or use of any product or circuit, and specifically disclaims any and all liability, including without limitation special, consequential or incidental damages. Buyer is responsible for its products and applications using **onsemi** products, including compliance with all laws, regulations and safety requirements or standards, regardless of any support or applications information provided by **onsemi**. "Typical" parameters which may be provided in **onsemi** data sheets and/or specifications can and do vary in different applications and actual performance may vary over time. All operating parameters, including "Typicals" must be validated for each customer application by customer's technical experts. **onsemi** does not convey any license under any of its intellectual property rights nor the rights of others. **onsemi** products are not designed, intended, or authorized for use as a critical component in life support systems or any FDA Class 3 medical devices or medical devices with a same or similar classification in a foreign jurisdiction or any devices intended for implantation in the human body. Should Buyer purchase or use **onsemi** products for any such unintended or unauthorized application, Buyer shall indemnify and hold **onsemi** and its officers, employees, subsidiaries, affiliates, and distributors harmless against all claims, costs, damages, and expenses, and reasonable attorney fees arising out of, directly or indirectly, any claim of personal injury or death associated with such unintended or unauthorized use, even if such claim alleges that **onsemi** was negligent regarding the design or manufacture of the part. **onsemi** is an Equal Opportunity/Affirmative Action Employer. This literature is subject to all applicable copyright laws and is not for resale in any manner.

ADDITIONAL INFORMATION

TECHNICAL PUBLICATIONS:
Technical Library: www.onsemi.com/design/resources/technical−documentation
onsemi Website: www.onsemi.com

ONLINE SUPPORT: www.onsemi.com/support
For additional information, please contact your local Sales Representative at www.onsemi.com/support/sales