USB 3.2 Dual Channel High Gain Linear Redriver, 3.3 V

NB7NPQ7222M

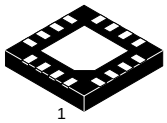

UQFN16
CASE 523AF

Description

The NB7NPQ7222M is a 3.3 V dual channel, high gain, redriver for USB 3.2 Gen 1 and USB 3.2 Gen 2 applications that supports both 5 Gbps and 10 Gbps data rates. Signal integrity degrades from PCB traces, transmission cables, and inter−symbol interference (ISI). The NB7NPQ7222M compensates for these losses by engaging varying levels of equalization at the input receiver, and flat gain amplification on the output transmitter. The Flat Gain and Equalization are controlled by four level control pins. Each channel has a set of independent control pins to make signal optimization possible.

After power up, periodic check of TX output is made for the receiver connection. When the receiver is detected, the RX termination becomes enabled and the device is set to perform the redriver function. Note that both channels are independent of each other.

The NB7NPQ7222M comes in a small 3 x 3 mm UQFN16 package and is specified to operate across the entire industrial temperature range of –40°C to 85°C.

Features

- 3.3 V ± 0.3 V Power Supply
- Low Power Consumption: 114 mA in Active Mode
- Supports USB 3.2 Gen 1 and USB 3.2 Gen 2 Data Rates
- Backwards Compatible with USB 3.1 Gen 1 / Gen 2 and USB 3.0
- Automatic Receiver Termination Detection
- Integrated Input and Output Termination
- Independent, Selectable Equalization and Flat Gain
- Hot−Plug Capable
- Operating Temperature Range: −40°C to +85°C
- Small 3 x 3 x 0.5 mm UQFN16 Package, Flow Through Design for Ease of PCB Layout
- This is a Pb−Free Device

Typical Applications

- USB3.2 Type−C and Type−A Signal Routing
- Mobile Phone and Tablet
- Computer, Laptop and Notebook
- External Storage Device
- Docking Station and Dongle
- Active Cable, Back Planes
- Gaming Console, Smart T.V.

MARKING DIAGRAM



NB7N7222 = Specific Device Code
A = Assembly Location
L = Wafer Lot
Y = Year
W = Work Week
▪ = Pb−Free Package

(Note: Microdot may be in either location)

ORDERING INFORMATION

Device	Package	Shipping†
NB7NPQ7222MMUTXG	UQFN16 (Pb−Free)	3000 / Tape & Reel

†For information on tape and reel specifications, including part orientation and tape sizes, please refer to our Tape and Reel Packaging Specification Brochure, BRD8011/D.

© Semiconductor Components Industries, LLC, 2019

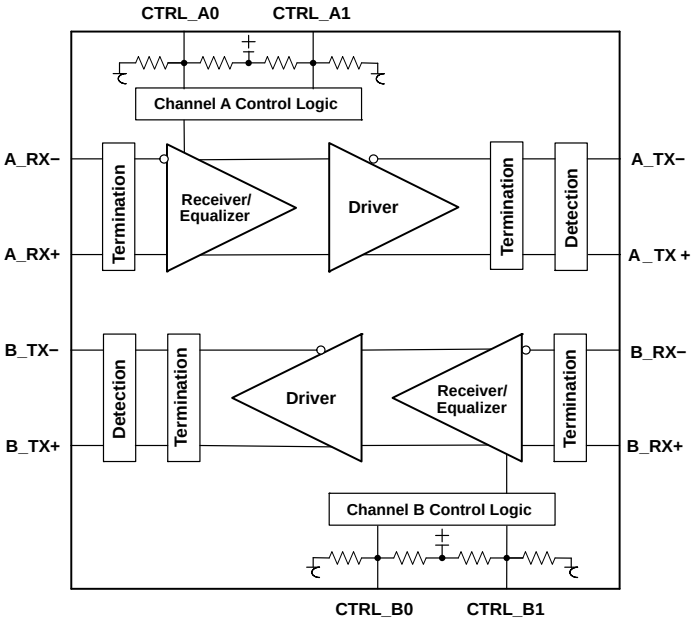

Figure 1. Logic Diagram of NB7NPQ7222M

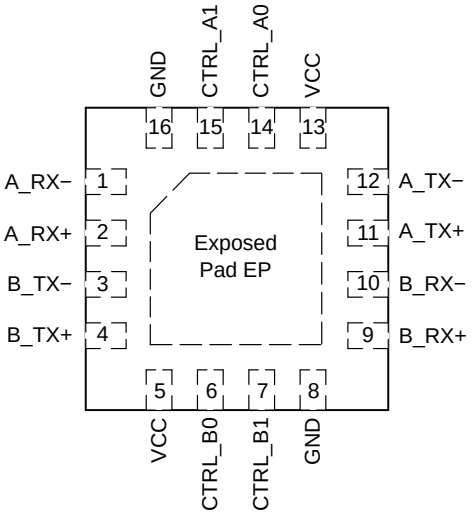

Figure 2. UQFN16 Package Pinout (Top View)

Table 1. PIN DESCRIPTION

Pin No.	Pin Name	Type	Description
1	A_RX−	DIFF IN	Channel A Differential input pair for 5 / 10 Gbps USB signals. Must be externally AC−coupled.
2	A_RX+		
3	B_TX−	DIFF OUT	Channel B Differential output for 5 / 10 Gbps USB signals. Must be externally AC−coupled.
4	B_TX+		
5	VCC	POWER	3.3 V power supply. VCC pins must be externally connected to power supply to guarantee proper operation.
6	CTRL_B0	LVCMOS IN	Pin B0 for control of Flat Gain settings on Channel B having internal 100 kΩ pull up and 200 kΩ pull down resistors. 4 state input: HIGH “H” where pin is connected to V_{CC}, LOW “L” where pin is connected to Ground, FLOAT “F” where the pin is left floating (open) and Rext “R” where an external resistor 68 kΩ connected from pin to Ground. Refer Table 2 for the different settings.
7	CTRL_B1	LVCMOS IN	Pin B1 for control of Equalization settings on Channel B having internal 100 kΩ pull up and 200 kΩ pull down resistors. 4 state input: HIGH “H” where pin is connected to V_{CC}, LOW “L” where pin is connected to Ground, FLOAT “F” where the pin is left floating (open) and Rext “R” where an external resistor 68 kΩ connected from pin to Ground. Refer Table 2 for the different settings.
8	GND	GND	Reference Ground. GND pins must be externally connected to power supply ground to guarantee proper operation.
9	B_RX+	DIFF IN	Channel B Differential input pair for 5 / 10 Gbps USB signals. Must be externally AC coupled.
10	B_RX−		
11	A_TX+	DIFF OUT	Channel A Differential output for 5 / 10 Gbps USB signals. Must be externally AC coupled.
12	A_TX−		
13	VCC	POWER	3.3 V power supply. VCC pins must be externally connected to power supply to guarantee proper operation.
14	CTRL_A0	LVCMOS IN	Pin A0 for control of Equalization settings on Channel A having internal 100 kΩ pull up and 200 kΩ pull down resistors. 4 state input: HIGH “H” where pin is connected to V_{CC}, LOW “L” where pin is connected to Ground, FLOAT “F” where the pin is left floating (open) and Rext “R” where an external resistor 68 kΩ connected from pin to Ground. Refer Table 2 for the different settings.
15	CTRL_A1	LVCMOS IN	Pin A1 for Control of Flat Gain settings on Channel A having internal 100 kΩ pull up and 200 kΩ pull down resistors. 4 state input: HIGH “H” where pin is connected to V_{CC}, LOW “L” where pin is connected to Ground, FLOAT “F” where the pin is left floating (open) and Rext “R” where an external resistor 68 kΩ connected from pin to Ground. Refer Table 2 for the different settings.
16	GND	GND	Reference Ground. GND pins must be externally connected to power supply ground to guarantee proper operation.
EP	GND	GND	Exposed pad (EP). EP on the package bottom is thermally connected to the die for improved heat transfer out of the package. The pad is not electrically connected to the die, but is recommended to be soldered to GND on the PC Board.

NOTE: If CTRL_XX are needed to be at a high logic level in the application, then they must be powered simultaneously with VDD, or later.

Table 2. CONTROL PIN EFFECTS (Typical Values)

Setting #	Channel A		Channel B		EQ (dB) @ 5 GHz	FG (dB)
	CTRL_A1 (FGA)	CTRL_A0 (EQA)	CRTL_B1 (EQB)	CRTL_B0 (FGB)		
1	L	L	L	L	11.5	−1.2
2	L	R	R	L	7.4	−1.2
3	L	F	F	L	9.9	−1.2
4	L	H	H	L	13.1	−1.2
5	R	L	L	R	11.5	0
6	R	R	R	R	7.4	0
7	R	F	F	R	9.9	0
8	R	H	H	R	13.1	0
9	F	L	L	F	11.5	+1.0
10	F	R	R	F	7.4	+1.0
11 (Default)	F	F	F	F	9.9	+1.0
12	F	H	H	F	13.1	+1.0
13	H	L	L	H	11.5	+2.0
14	H	R	R	H	7.4	+2.0
15	H	F	F	H	9.9	+2.0
16	H	H	H	H	13.1	+2.0

NOTE: EQ and FG can be set by adjusting the voltage to the control pins. There are 4 specific levels – HIGH “H” where pin is connected to V_{CC}, LOW “L” where pin is connected to Ground, FLOAT “F” where the pin is left floating (open) and Rext “R” where an external resistor 68 kΩ connected from pin to Ground. Please refer Table 7 for voltage levels.

Table 3. ATTRIBUTES

Parameter		
ESD Protection	Human Body Model Charged Device Model	± 4 kV 1.5 kV
Moisture Sensitivity, Indefinite Time Out of Dry pack (Note 2)		Level 1
Flammability Rating	Oxygen Index: 28 to 34	UL 94 V−O @ 0.125 in
Transistor Count		40517
Meets or exceeds JEDEC Spec EIA/JESD78 IC Latch−up Test		

1. ESD Human Body Model tested as per JEDEC standard JS−001−2017 (AEC−Q100−002)
2. For additional information, see Application Note AND8003/D.

Table 4. ABSOLUTE MAXIMUM RATINGS Over operating free−air temperature range (unless otherwise noted)

Parameter	Description	Min	Max	Unit
Supply Voltage (Note 3)	V_{CC}	−0.5	4.6	V
Voltage range at any input or output terminal	Differential I/O	−0.5	V_{CC} + 0.5	V
	LVCMOS inputs	−0.5	V_{CC} + 0.5	V
Output Current		−25	+25	mA
Power Dissipation, Continuous			1.2	W
Storage Temperature Range, T_{SG}		−65	150	°C
Maximum Junction Temperature, T_J			125	°C
Junction−to−Ambient Thermal Resistance @ 500 lfm, θ_{JA} (Note 4)			34	°C/W
Wave Solder, Pb−Free, T_{SOL}			265	°C

Stresses exceeding those listed in the Maximum Ratings table may damage the device. If any of these limits are exceeded, device functionality should not be assumed, damage may occur and reliability may be affected.

3. All voltage values are with respect to the GND terminals.
4. JEDEC standard multilayer board − 2S2P (2 signal, 2 power)

Table 5. RECOMMENDED OPERATING CONDITIONS Over operating free−air temperature range (unless otherwise noted)

Parameter	Description	Min	Typ	Max	Unit
V_{CC}	Main power supply	3.0	3.3	3.6	V
T_A	Operating free−air temperature Industrial Temperature Range	−40		+85	°C
C_{AC}	AC coupling capacitor	75	100	265	nF
Rext	External Resistor ± 5% for the control pin “R” setting		68		kΩ

Functional operation above the stresses listed in the Recommended Operating Ranges is not implied. Extended exposure to stresses beyond the Recommended Operating Ranges limits may affect device reliability.

Table 6. POWER SUPPLY CHARACTERISTICS

Parameter		Test Condition	Min	Typ (Note 5)	Max	Units
ICC	Active mode current	100 MHz, test pattern		125		mA
		10 Gbps, compliance test pattern				
	Low Power Slumber mode current	No input signal		0.51		mA
	Unplug mode current	No output load is detected		0.24		mA

5. Typ values use V_{CC} = 3.3 V, T_A = 25°C.

Table 7. LVCMOS CONTROL PIN CHARACTERISTICS 4−State LVCMOS Inputs (CTRL_A0, CTRL_A1, CTRL_B0, CTRL_B1)

Parameter		Test Conditions	Min	Typ	Max	Unit
V_{IL}	DC Input Setting “L” LOW	Input pin connected to GND		GND	0.1 * V_{CC}	V
V_{IR}	DC Input Setting “R” with Rext	Rext (typ 68kΩ) must be connected between Pin and GND, [Logic 1/3 * V_{CC}]	0.23 * V_{CC}	0.33 * V_{CC}	0.43 * V_{CC}	V
V_{IF}	DC Input Setting “F” FLOAT (Note 6)	Input pin is left FLOAT (open), [Logic 2/3 * V_{CC}]	0.56 * V_{CC}	0.66 * V_{CC}	0.76 * V_{CC}	V
V_{IH}	DC Input Setting “H” HIGH	Input pin connected to V_{CC}	0.92 * V_{CC}	V_{CC}		V
R_{PU}	Internal pull up resistance			100		kΩ
R_{PD}	Internal pull down resistance			200		kΩ
I_{IH}	High level input current	V_{IN} = 3.60 V			25	μA
I_{IL}	Low level input current	V_{IN} = GND, VCC = 3.60 V	−45			μA

6. FLOAT refers to a pin left in an open state, with no external connections.

Table 8. RECEIVER AC/DC CHARACTERISTICS Over operating free−air temperature range (unless otherwise noted)

Parameter		Test Conditions	Min	Typ	Max	Unit
$V_{RX-DIFF-pp}$	Input differential voltage swing	AC−coupled, peak−to−peak differential	100		1200	mV_{PP}
V_{RX-CM}	Common−mode voltage bias in the receiver (DC)			V_{CC}		V
$Z_{RX-DIFF}$	Differential input Resistance (DC)	Present after an USB device is detected on TX+/TX−	80	100	120	Ω
Z_{RX-CM}	Common−mode input Resistance (DC)	Present after an USB device is detected on TX+/TX−	20	25	30	Ω
$Z_{RX-HIGH-IMP}$	Common−mode input Resistance with termination disabled (DC)	Present when no USB device is detected on TX+	25			kΩ
$V_{TH-LFPS-pp}$	Low Frequency Periodic Signaling (LFPS) Detect Threshold	Must wake−up above the maximum		150	300	mV_{PP}

Product parametric performance is indicated in the Electrical Characteristics for the listed test conditions, unless otherwise noted. Product performance may not be indicated by the Electrical Characteristics if operated under different conditions.

Table 9. TRANSMITTER AC/DC CHARACTERISTICS Over operating free−air temperature range (unless otherwise noted)

Parameter		Test Conditions	Min	Typ	Max	Unit
V_{sw_100M}	−1 dB compression point Output swing at 100 MHz	100 MHz Sine Wave		900		mV_{PPd}
V_{sw_5G}	−1 dB compression point Output swing at 5 GHz	5 GHz Sine Wave		900		mV_{PPd}
C_{TX}	TX input capacitance to GND	At 2.5 GHz		1.25		pF
$Z_{TX-DIFF}$	Differential output impedance (DC)	Present after an USB device is detected on TX+/TX−	80	100	120	Ω
Z_{TX-CM}	Common−mode output impedance (DC)	Present after an USB device is detected on TX+/TX−	20	25	30	Ω
I_{TX-SC}	TX short circuit current	TX+ or TX− shorted to GND		70		mA
V_{TX-CM}	Common−mode voltage bias in the transmitter (DC)	100 mV, 50 MHz, 5 Gbps and 10 Gbps, PRBS 2^7		V_{CC}− 0.8	VCC	V
$V_{TX-CM-ACpp}$	AC common−mode peak−to−peak Voltage swing in active mode	Within U0 and at 50 MHz (LFPS)			100	mV_{PP}
$V_{TX-IDLE-DIFF-ACpp}$	Differential voltage swing during electrical idle	Tested with a high−pass filter	0		10	mV_{PP}
$V_{TX-RXDET}$	Voltage change to allow receiver detect	The change in voltage that triggers detection of a receiver.		300	600	mV
t_R, t_F	Output rise, fall time	20% − 80% of differential voltage measured 1 inch from the output pin, 1 GHz clock, 800 mV differential amplitude		35		ps
t_{RF-MM}	Output rise, Fall time mismatch	20% − 80% of differential voltage measured 1 inch from the output pin			5	ps
$t_{diff-LH}$, $t_{diff-HL}$	Differential propagation delay	Propagation delay between 50% level at input and output		115		ps
$t_{idleExit}$	Idle exit time	50 MHz clock signal, EQ an FG setting “FF (Default)”		4		ns
$t_{idleEntry}$	Idle entry time	50 MHz clock signal, EQ an FG setting “FF (Default)”		4		ns

Table 10. TIMING AND JITTER CHARACTERISTICS

Parameter		Test Conditions	Min	Typ	Max	Unit
TIMING						
t_{READY}	Time from power applied until RX termination is enabled	Apply 0 V to V_{CC}, connect USB termination to TX ±, apply 3.3 V to V_{CC}, and measure when $Z_{RX-DIFF}$ is enabled		100		ms
JITTER FOR 5 Gbps						
$T_{JTX-EYE}$	Total jitter (Notes 7, 8)	FG and EQ setting “FF”		0.035		UI (Note 9)
D_{JTX}	Deterministic jitter (Note 8)			0.003		UI
R_{JTX}	Random jitter (Note 8)			0.005		UI
JITTER FOR 10 Gbps						
$T_{JTX-EYE}$	Total jitter (Notes 7, 8)	FG and EQ setting “FF”		0.085		UI (Note 9)
D_{JTX}	Deterministic jitter (Note 8)			0.040		UI
R_{JTX}	Random jitter (Note 8)			0.007		UI

7. Includes RJ at 10^{-12}.
8. Measured at the ends of reference channel with a K28.5 pattern, VID = 1000 mVpp.
9. 5 Gbps, UI = 200 ps for 10 Gbps, UI = 100 ps Test condition

PARAMETER MEASUREMENT DIAGRAMS

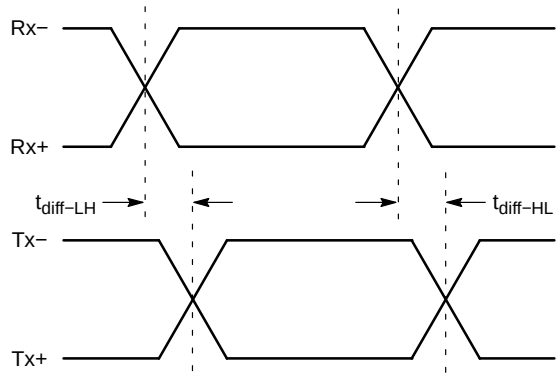

Figure 3. Propagation Delay

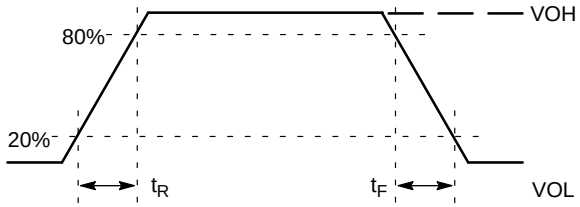

Figure 4. Output Rise and Fall Times

APPLICATION GUIDELINES

LFPS Compliance Testing

As part of USB 3.1 compliance test, the host or peripheral must transmit a LFPS signal that adheres to the spec parameters. The NB7NPQ7222M is tested as a part of a USB compliant system to ensure that it maintains compliance while increasing system performance.

LFPS Functionality

USB 3.1, Gen1 and Gen2 use Low Frequency Periodic Signaling (LFPS) to implement functions like exiting low−power modes, performing warm resets and providing link training between host and peripheral devices. LFPS signaling consists of bursts of frequencies ranging between 10 to 50 MHz and can have specific burst lengths or repeat rates.

Ping.LFPS for TX Compliance

During the transmitter compliance, the system under test must transmit certain compliance patterns as defined by the USB−IF. In order to toggle through these patterns for various tests, the receiver must receive a ping. LFPS signal from either the test suite or a separate pattern generator. The standard signal comprises of a single burst period of 100 ns at 20 MHz.

Control Pin Settings

Control pins CTRL_A1 & CTRL_B0 controls the flat gain and CTRL_A0 & CTRL_B1 controls the equalization of channels A and B respectively.

The Float (Default) Setting “F” can be set by leaving the control pins in a floating state. The redriver will internally bias (with an internal pull up resistor of 100 kΩ and pull down resistor of 200 kΩ) the control pins to the correct voltage (Logic 2/3 * V_{CC}). The low setting “L” can be set by pulling the control pin to ground. The high setting “H” can be set by pulling the pin high to VCC. The R_{ext} setting can be set by adding a 68 kΩ resistor from the control pin to ground. This will bias the redriver internal voltage to Logic 1/3 * V_{CC}.

Linear Equalization

The linear equalization that the NB7NPQ7222M provides compensates for losses that occur naturally along board traces and cable lines. Linear Equalization boosts high frequencies and lower frequencies linearly so when transmitting at varying frequencies, the voltage amplitude will remain consistent. This compensation electrically counters losses and allows for longer traces to be possible when routing.

DC Flat Gain

DC flat gain equally boosts high and low frequency signals, and is essential for countering low frequency losses. DC flat gain can also be used to simulate a higher input signal from a USB Controller. If a USB controller can only provide 800 mV differential to a receiver, it can be boosted to 1130 mV using 2 dB of flat gain.

Total Gain

When using Flat Gain with Equalization in a USB application it is important to make sure that the total voltage does not exceed 1200 mV. Total gain can be calculated by adding the EQ gain to the Flat Gain.

TYPICAL APPLICATION

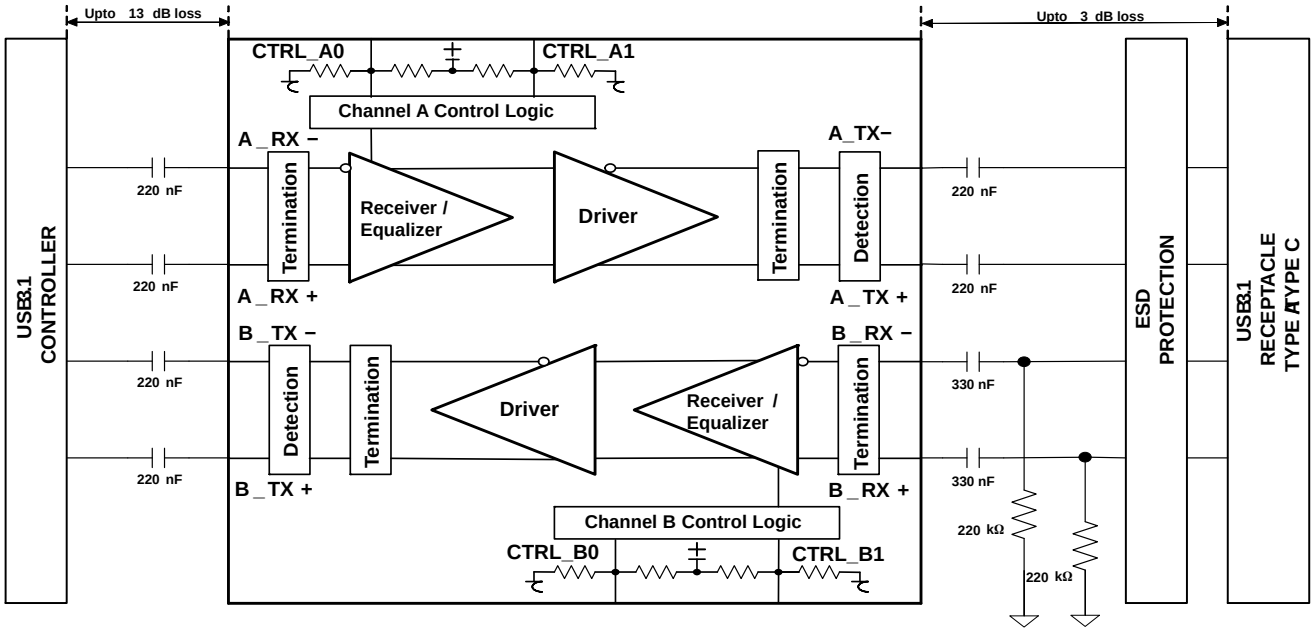

Figure 5. USB 3.1 Host Side NB7NPQ7222M Application

Table 11. DESIGN REQUIREMENTS

Design Parameter	Value
Supply Voltage	3.3 V nominal, (3.0 V to 3.6 V)
Operation Mode (Control Pin Selection)	Default FLOAT “F”, adjust based on application losses. Refer Table 2 for different EQ and FG setting.
TX AC Coupling Capacitors	220 nF nominal, 75 nF to 265 nF, see Figure 5
RX AC Coupling Capacitors	330 − 470 nF nominal, see Figure 5
R_{ext}	68 kΩ ± 5%
RX Pull Down Resistors at Receptacle	200 kΩ to 220 kΩ
Power Supply Capacitors	100 nF to GND close to each Vcc pin, and 10 μF to GND on the Vcc plane
Trace loss of FR4 before NB7NPQ7222M	Up to 13 dB losses
Trace loss of FR4 after NB7NPQ7222M	Up To 2 dB losses. Keep as short as possible for best performance.
DC Flat Gain Options	−1.2 dB, 0 dB, +1.0 dB, +2.0 dB
Equalization Options	7.4 to 13.1 dB
Differential Trace Impedance	90 Ω ± 10%

Typical Layout Practices

- RX and TX pairs should maintain as close to a 90 Ω Differential impedance as possible.
- Limit the number of vias used on each data line. It is suggested that 2 or fewer are used.
- Traces should be routed as straight and symmetric as possible.
- RX and TX differential pairs should always be placed and routed on the same layer directly above a ground plane. This will help reduce EMI and noise on the data lines.
- Routing angles should be obtuse angles and kept to 135 degrees or larger.
- To minimize crosstalk, TX and RX data lines should be kept away from other high speed signals.

MECHANICAL CASE OUTLINE
PACKAGE DIMENSIONS

ON Semiconductor®

UQFN16 3x3, 0.5P
CASE 523AF
ISSUE B

DATE 04 NOV 2015

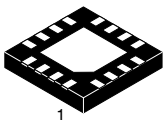

SCALE 4:1

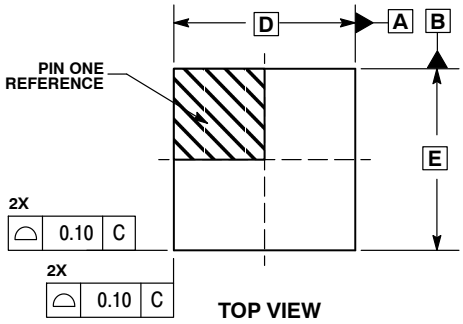

TOP VIEW

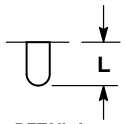

DETAIL A
OPTIONAL CONSTRUCTION
2X SCALE

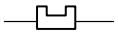

DETAIL B
OPTIONAL CONSTRUCTION
4X SCALE

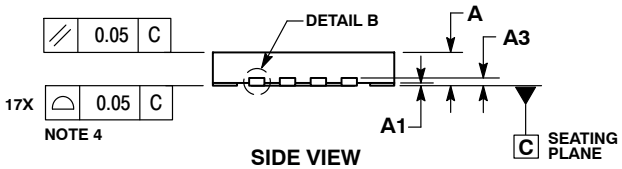

SIDE VIEW

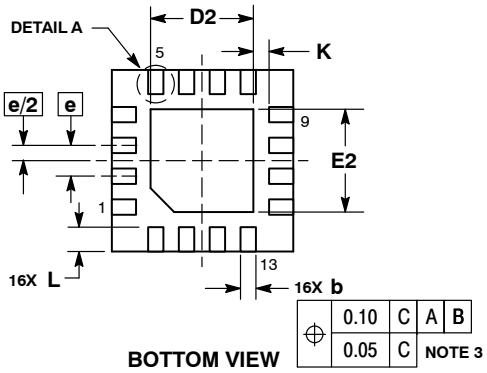

BOTTOM VIEW

NOTES:
1. DIMENSIONING AND TOLERANCING PER ASME Y14.5M, 1994.
2. CONTROLLING DIMENSION: MILLIMETERS.
3. DIMENSION b APPLIES TO PLATED TERMINAL AND IS MEASURED BETWEEN 0.15 AND 0.30 MM FROM TERMINAL TIP.
4. COPLANARITY APPLIES TO THE EXPOSED PAD AS WELL AS THE TERMINALS.

	MILLIMETERS	
DIM	MIN	MAX
A	0.45	0.55
A1	0.00	0.05
A3	0.127 REF	
b	0.20	0.30
D	3.00 BSC	
D2	1.60	1.80
E	3.00 BSC	
E2	1.60	1.80
e	0.50 BSC	
K	0.20	---
L	0.30	0.50

GENERIC MARKING DIAGRAM*



XXXX = Specific Device Code
A = Assembly Location
L = Wafer Lot
Y = Year
W = Work Week
▪ = Pb−Free Package

*This information is generic. Please refer to device data sheet for actual part marking. Pb−Free indicator, “G” or microdot “ ▪”, may or may not be present.

SOLDERING FOOTPRINT*

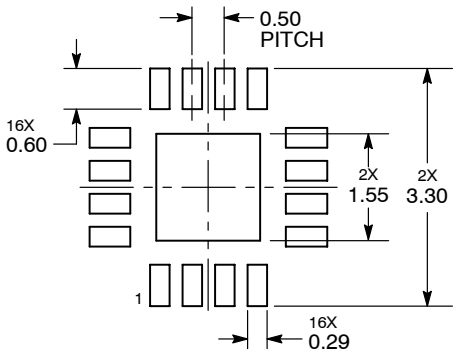

DIMENSIONS: MILLIMETERS

*For additional information on our Pb−Free strategy and soldering details, please download the ON Semiconductor Soldering and Mounting Techniques Reference Manual, SOLDERRM/D.

DOCUMENT NUMBER:	**98AON24478D**	Electronic versions are uncontrolled except when accessed directly from the Document Repository. Printed versions are uncontrolled except when stamped “CONTROLLED COPY” in red.
DESCRIPTION:	**UQFN16, 3X3, 0.5P**	**PAGE 1 OF 1**

ON Semiconductor and ON are trademarks of Semiconductor Components Industries, LLC dba ON Semiconductor or its subsidiaries in the United States and/or other countries. ON Semiconductor reserves the right to make changes without further notice to any products herein. ON Semiconductor makes no warranty, representation or guarantee regarding the suitability of its products for any particular purpose, nor does ON Semiconductor assume any liability arising out of the application or use of any product or circuit, and specifically disclaims any and all liability, including without limitation special, consequential or incidental damages. ON Semiconductor does not convey any license under its patent rights nor the rights of others.

© Semiconductor Components Industries, LLC, 2019

onsemi, , and other names, marks, and brands are registered and/or common law trademarks of Semiconductor Components Industries, LLC dba "**onsemi**" or its affiliates and/or subsidiaries in the United States and/or other countries. **onsemi** owns the rights to a number of patents, trademarks, copyrights, trade secrets, and other intellectual property. A listing of **onsemi**'s product/patent coverage may be accessed at www.onsemi.com/site/pdf/Patent−Marking.pdf. **onsemi** reserves the right to make changes at any time to any products or information herein, without notice. The information herein is provided "as−is" and **onsemi** makes no warranty, representation or guarantee regarding the accuracy of the information, product features, availability, functionality, or suitability of its products for any particular purpose, nor does **onsemi** assume any liability arising out of the application or use of any product or circuit, and specifically disclaims any and all liability, including without limitation special, consequential or incidental damages. Buyer is responsible for its products and applications using **onsemi** products, including compliance with all laws, regulations and safety requirements or standards, regardless of any support or applications information provided by **onsemi**. "Typical" parameters which may be provided in **onsemi** data sheets and/or specifications can and do vary in different applications and actual performance may vary over time. All operating parameters, including "Typicals" must be validated for each customer application by customer's technical experts. **onsemi** does not convey any license under any of its intellectual property rights nor the rights of others. **onsemi** products are not designed, intended, or authorized for use as a critical component in life support systems or any FDA Class 3 medical devices or medical devices with a same or similar classification in a foreign jurisdiction or any devices intended for implantation in the human body. Should Buyer purchase or use **onsemi** products for any such unintended or unauthorized application, Buyer shall indemnify and hold **onsemi** and its officers, employees, subsidiaries, affiliates, and distributors harmless against all claims, costs, damages, and expenses, and reasonable attorney fees arising out of, directly or indirectly, any claim of personal injury or death associated with such unintended or unauthorized use, even if such claim alleges that **onsemi** was negligent regarding the design or manufacture of the part. **onsemi** is an Equal Opportunity/Affirmative Action Employer. This literature is subject to all applicable copyright laws and is not for resale in any manner.

ADDITIONAL INFORMATION

TECHNICAL PUBLICATIONS:
Technical Library: www.onsemi.com/design/resources/technical−documentation
onsemi Website: www.onsemi.com

ONLINE SUPPORT: www.onsemi.com/support
For additional information, please contact your local Sales Representative at www.onsemi.com/support/sales