MC74VHC574

Octal D-Type Flip-Flop with 3-State Output

The MC74VHC574 is an advanced high speed CMOS octal flip−flip with 3−state output fabricated with silicon gate CMOS technology. It achieves high speed operation similar to equivalent Bipolar Schottky TTL while maintaining CMOS low power dissipation.

This 8−bit D−type flip−flop is controlled by a clock input and an output enable input. When the output enable input is high, the eight outputs are in a high impedance state.

The internal circuit is composed of three stages, including a buffer output which provides high noise immunity and stable output. The inputs tolerate voltages up to 7 V, allowing the interface of 5 V systems to 3 V systems.

- High Speed: f_{max} = 180 MHz (Typ) at V_{CC} = 5 V
- Low Power Dissipation: I_{CC} = 4 μA (Max) at T_A = 25°C
- High Noise Immunity: $V_{NIH} = V_{NIL}$ = 28% V_{CC}
- Power Down Protection Provided on Inputs
- Balanced Propagation Delays
- Designed for 2 V to 5.5 V Operating Range
- Low Noise: V_{OLP} = 1.2 V (Max)
- Pin and Function Compatible with Other Standard Logic Families
- Latchup Performance Exceeds 300 mA
- ESD Performance: HBM > 2000 V; Machine Model > 200 V
- Chip Complexity: 266 FETs or 66.5 Equivalent Gates
- These Devices are Pb−Free and are RoHS Compliant

ON Semiconductor

http://onsemi.com

MARKING DIAGRAMS

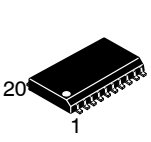

SOIC−20
DW SUFFIX
CASE 751D

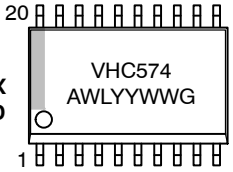

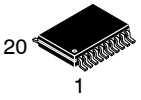

TSSOP−20
DT SUFFIX
CASE 948E

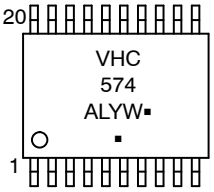

VHC574	= Specific Device Code
A	= Assembly Location
WL, L	= Wafer Lot
YY, Y	= Year
WW, W	= Work Week
G or ▪	= Pb−Free Package

(Note: Microdot may be in either location)

ORDERING INFORMATION

Device	Package	Shipping†
MC74VHC574DWR2G	SOIC−20	1000 / T&R
MC74VHC574DWG	SOIC−20	38 / Rail
MC74VHC574DTR2G	TSSOP−20	2500 / T&R
MC74VHC574DTG	TSSOP−20	75 / Rail

†For information on tape and reel specifications, including part orientation and tape sizes, please refer to our Tape and Reel Packaging Specification Brochure, BRD8011/D.

© Semiconductor Components Industries, LLC, 2011

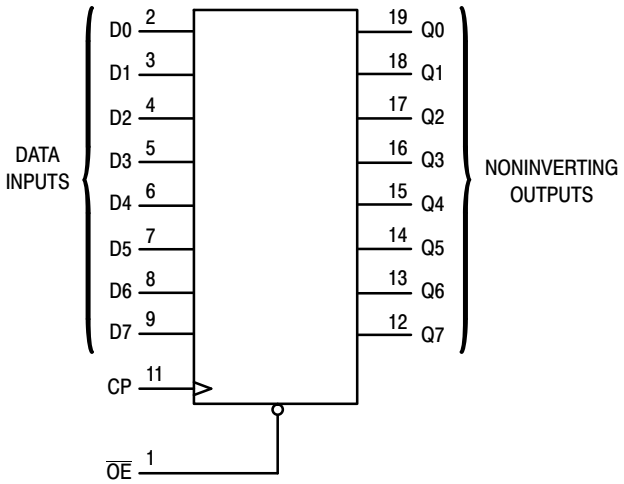

Figure 1. LOGIC DIAGRAM

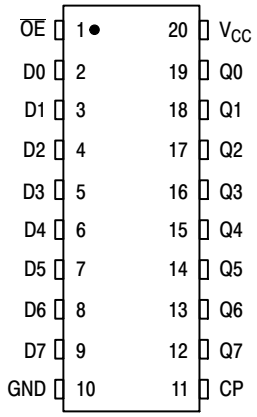

Figure 2. PIN ASSIGNMENT

FUNCTION TABLE

INPUTS			OUTPUT
$\overline{OE}$	CP	D	Q
L	↑	H	H
L	↑	L	L
L	L, H, ↓	X	No Change
H	X	X	Z

MAXIMUM RATINGS*

Symbol	Parameter	Value	Unit
V_{CC}	DC Supply Voltage	– 0.5 to + 7.0	V
V_{in}	DC Input Voltage	– 0.5 to + 7.0	V
V_{out}	DC Output Voltage	– 0.5 to V_{CC} + 0.5	V
I_{IK}	Input Diode Current	– 20	mA
I_{OK}	Output Diode Current	± 20	mA
I_{out}	DC Output Current, per Pin	± 25	mA
I_{CC}	DC Supply Current, V_{CC} and GND Pins	± 75	mA
P_D	Power Dissipation in Still Air, SOIC Packages† TSSOP Package†	500 450	mW
T_{stg}	Storage Temperature	– 65 to + 150	°C

This device contains protection circuitry to guard against damage due to high static voltages or electric fields. However, precautions must be taken to avoid applications of any voltage higher than maximum rated voltages to this high–impedance circuit. For proper operation, V_{in} and V_{out} should be constrained to the range GND ≤ (V_{in} or V_{out}) ≤ V_{CC}.

Unused inputs must always be tied to an appropriate logic voltage level (e.g., either GND or V_{CC}). Unused outputs must be left open.

* Absolute maximum continuous ratings are those values beyond which damage to the device may occur. Exposure to these conditions or conditions beyond those indicated may adversely affect device reliability. Functional operation under absolute–maximum–rated conditions is not implied.

†Derating — SOIC Packages: – 7 mW/°C from 65° to 125°C
TSSOP Package: – 6.1 mW/°C from 65° to 125°C

RECOMMENDED OPERATING CONDITIONS

Symbol	Parameter		Min	Max	Unit
V_{CC}	DC Supply Voltage		2.0	5.5	V
V_{in}	DC Input Voltage		0	5.5	V
V_{out}	DC Output Voltage		0	V_{CC}	V
T_A	Operating Temperature		– 40	+ 85	°C
t_r, t_f	Input Rise and Fall Time	V_{CC} = 3.3V V_{CC} = 5.0V	0 0	100 20	ns/V

DC ELECTRICAL CHARACTERISTICS

Symbol	Parameter	Test Conditions	V_{CC} V	T_A = 25°C			T_A = – 40 to 85°C		Unit
				Min	Typ	Max	Min	Max	
V_{IH}	Minimum High–Level Input Voltage		2.0 3.0 to 5.5	1.50 V_{CC} x 0.7			1.50 V_{CC} x 0.7		V
V_{IL}	Maximum Low–Level Input Voltage		2.0 3.0 to 5.5			0.50 V_{CC} x 0.3		0.50 V_{CC} x 0.3	V
V_{OH}	Minimum High–Level Output Voltage	V_{in} = V_{IH} or V_{IL} I_{OH} = – 50μA	2.0 3.0 4.5	1.9 2.9 4.4	2.0 3.0 4.5		1.9 2.9 4.4		V
		V_{in} = V_{IH} or V_{IL} I_{OH} = – 4mA I_{OH} = – 8mA	 3.0 4.5	 2.58 3.94			 2.48 3.80		
V_{OL}	Maximum Low–Level Output Voltage	V_{in} = V_{IH} or V_{IL} I_{OL} = 50μA	2.0 3.0 4.5		0.0 0.0 0.0	0.1 0.1 0.1		0.1 0.1 0.1	V
		V_{in} = V_{IH} or V_{IL} I_{OL} = 4mA I_{OL} = 8mA	 3.0 4.5			 0.36 0.36		 0.44 0.44	

DC ELECTRICAL CHARACTERISTICS

Symbol	Parameter	Test Conditions	V_{CC} V	T_A = 25°C			T_A = – 40 to 85°C		Unit
				Min	Typ	Max	Min	Max	
I_{in}	Maximum Input Leakage Current	V_{in} = 5.5V or GND	0 to 5.5			± 0.1		± 1.0	μA
I_{OZ}	Maximum Three−State Leakage Current	V_{in} = V_{IL} or V_{IH} V_{out} = V_{CC} or GND	5.5			± 0.25		± 2.5	μA
I_{CC}	Maximum Quiescent Supply Current	V_{in} = V_{CC} or GND	5.5			4.0		40.0	μA

AC ELECTRICAL CHARACTERISTICS (Input $t_r = t_f$ = 3.0ns)

Symbol	Parameter	Test Conditions		T_A = 25°C			T_A = – 40 to 85°C		Unit
				Min	Typ	Max	Min	Max	
f_{max}	Maximum Clock Frequency (50% Duty Cycle)	V_{CC} = 3.3 ± 0.3V	C_L = 15pF	80	125	—	65	—	ns
			C_L = 50pF	50	75	—	45	—	
		V_{CC} = 5.0 ± 0.5V	C_L = 15pF	130	180	—	110	—	
			C_L = 50pF	85	115	—	75	—	
t_{PLH}, t_{PHL}	Maximum Propagation Delay, CP to Q	V_{CC} = 3.3 ± 0.3	C_L = 15pF	—	8.5	13.2	1.0	15.5	ns
			C_L = 50pF	—	11.0	16.7	1.0	19.0	
		V_{CC} = 5.0 ± 0.5V	C_L = 15pF	—	5.6	8.6	1.0	10.0	
			C_L = 50pF	—	7.1	10.6	1.0	12.0	
t_{PZL}, t_{PZH}	Output Enable Time, $\overline{OE}$ to Q	V_{CC} = 3.3 ± 0.3V R_L = 1kΩ	C_L = 15pF	—	8.2	12.8	1.0	15.0	ns
			C_L = 50pF	—	10.7	16.3	1.0	18.5	
		V_{CC} = 5.0 ± 0.5V R_L = 1kΩ	C_L = 15pF	—	5.9	9.0	1.0	10.5	
			C_L = 50pF	—	7.4	11.0	1.0	12.5	
t_{PLZ}, t_{PHZ}	Output Disable Time, $\overline{OE}$ to Q	V_{CC} = 3.3 ± 0.3V R_L = 1kΩ	C_L = 50pF	—	11.0	15.0	1.0	17.0	ns
		V_{CC} = 5.0 ± 0.5V R_L = 1kΩ	C_L = 50pF	—	7.1	10.1	1.0	11.5	
t_{OSLH}, t_{OSHL}	Output to Output Skew	V_{CC} = 3.3 ± 0.3V (Note 1)	C_L = 50pF	—	—	1.5	—	1.5	ns
		V_{CC} = 5.0 ± 0.5V (Note 1)	C_L = 50pF	—	—	1.0	—	1.0	ns
C_{in}	Maximum Input Capacitance			—	4	10	—	10	pF
C_{out}	Maximum Three−State Output Capacitance, Output in High−Impedance State			—	6	—	—	—	pF

		Typical @ 25°C, V_{CC} = 5.0V	
C_{PD}	Power Dissipation Capacitance (Note 2)	28	pF

1. Parameter guaranteed by design. $t_{OSLH} = |t_{PLHm} - t_{PLHn}|$, $t_{OSHL} = |t_{PHLm} - t_{PHLn}|$.
2. C_{PD} is defined as the value of the internal equivalent capacitance which is calculated from the operating current consumption without load. Average operating current can be obtained by the equation: $I_{CC(OPR)} = C_{PD} \bullet V_{CC} \bullet f_{in} + I_{CC}/8$ (per flip−flop). C_{PD} is used to determine the no−load dynamic power consumption; $P_D = C_{PD} \bullet V_{CC}^2 \bullet f_{in} + I_{CC} \bullet V_{CC}$.

NOISE CHARACTERISTICS (Input $t_r = t_f = 3.0$ns, $C_L = 50$pF, $V_{CC} = 5.0$V)

Symbol	Parameter	$T_A = 25°C$		Unit
		Typ	Max	
V_{OLP}	Quiet Output Maximum Dynamic V_{OL}	0.9	1.2	V
V_{OLV}	Quiet Output Minimum Dynamic V_{OL}	– 0.9	– 1.2	V
V_{IHD}	Minimum High Level Dynamic Input Voltage	—	3.5	V
V_{ILD}	Maximum Low Level Dynamic Input Voltage	—	1.5	V

TIMING REQUIREMENTS (Input $t_r = t_f = 3.0$ns)

Symbol	Parameter	Test Conditions	$T_A = 25°C$		$T_A = -40$ to $85°C$	Unit
			Typ	Limit	Limit	
t_{su}	Minimum Setup Time, D to CP	$V_{CC} = 3.3 \pm 0.3$ V $V_{CC} = 5.0 \pm 0.5$ V	— —	3.5 3.5	3.5 3.5	ns
t_h	Minimum Hold Time, CP to D	$V_{CC} = 3.3 \pm 0.3$ V $V_{CC} = 5.0 \pm 0.5$ V	— —	1.5 1.5	1.5 1.5	ns
t_w	Minimum Pulse Width, CP	$V_{CC} = 3.3 \pm 0.3$ V $V_{CC} = 5.0 \pm 0.5$ V	— —	5.0 5.0	5.5 5.0	ns

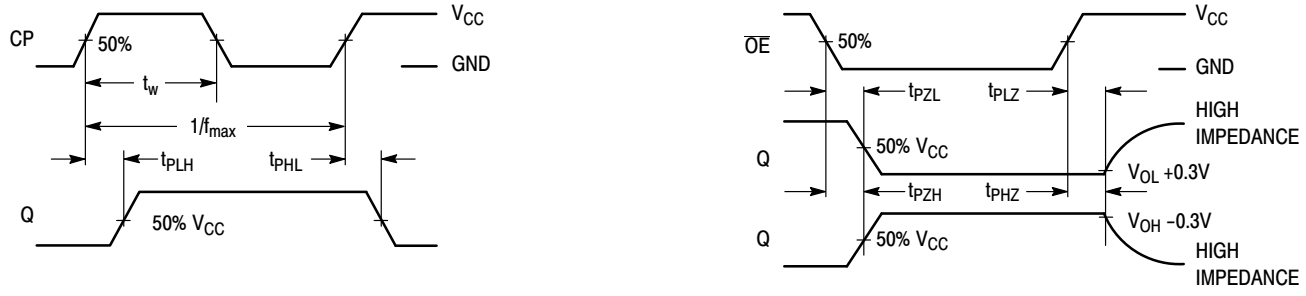

Figure 3. Switching Waveforms

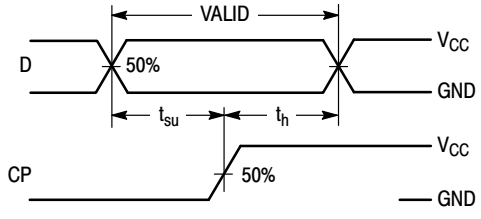

Figure 4.

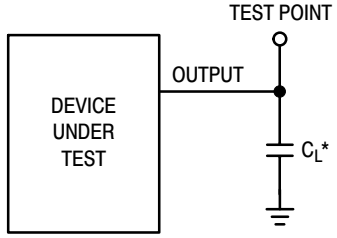

*Includes all probe and jig capacitance

Figure 5.

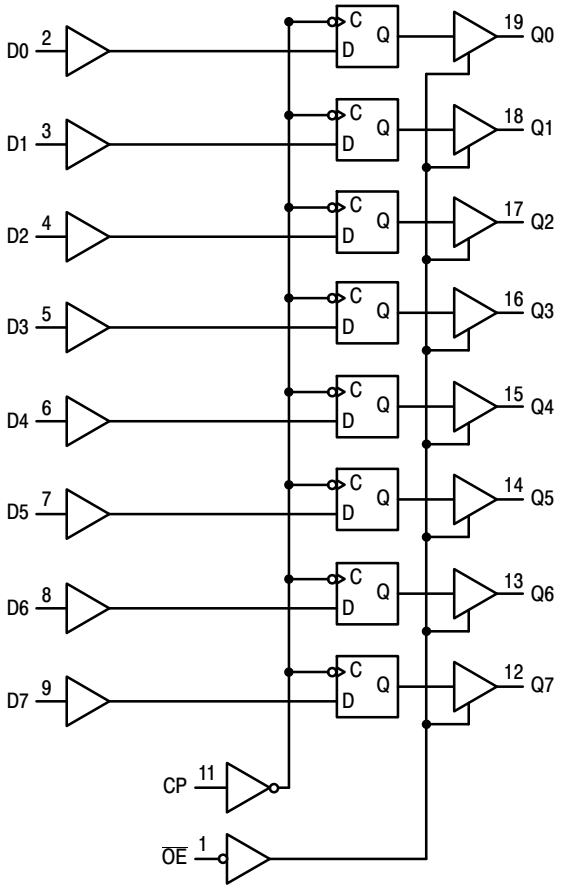

Figure 6. Expanded Logic Diagram

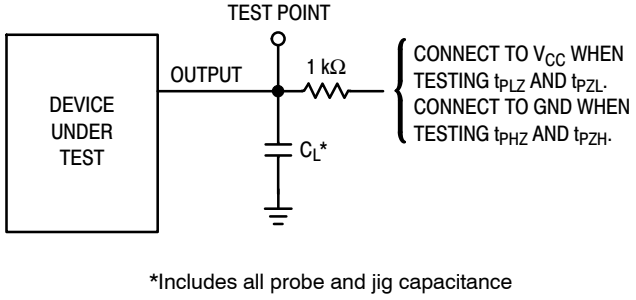

*Includes all probe and jig capacitance

Figure 7. Test Circuit

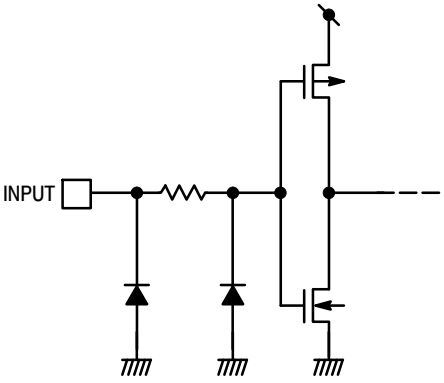

Figure 8. INPUT EQUIVALENT CIRCUIT

MECHANICAL CASE OUTLINE
PACKAGE DIMENSIONS

SOIC−20 WB
CASE 751D−05
ISSUE H

DATE 22 APR 2015

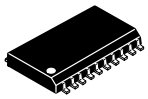

SCALE 1:1

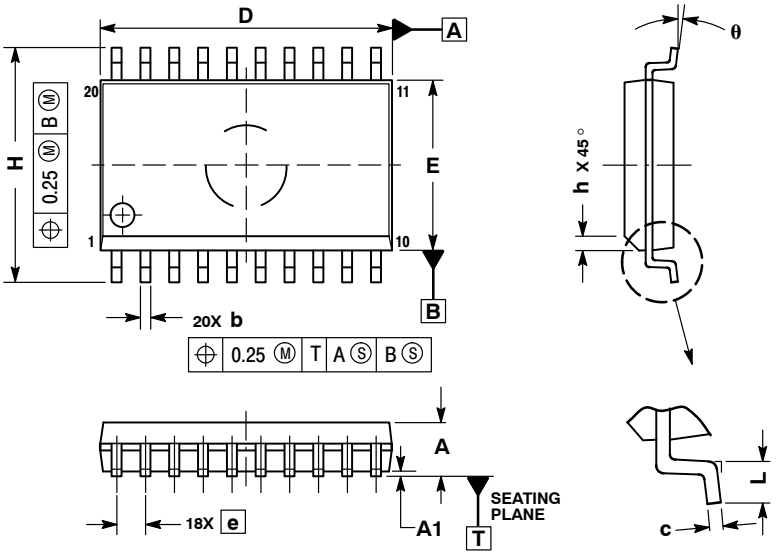

NOTES:
1. DIMENSIONS ARE IN MILLIMETERS.
2. INTERPRET DIMENSIONS AND TOLERANCES PER ASME Y14.5M, 1994.
3. DIMENSIONS D AND E DO NOT INCLUDE MOLD PROTRUSION.
4. MAXIMUM MOLD PROTRUSION 0.15 PER SIDE.
5. DIMENSION B DOES NOT INCLUDE DAMBAR PROTRUSION. ALLOWABLE PROTRUSION SHALL BE 0.13 TOTAL IN EXCESS OF B DIMENSION AT MAXIMUM MATERIAL CONDITION.

	MILLIMETERS	
DIM	MIN	MAX
A	2.35	2.65
A1	0.10	0.25
b	0.35	0.49
c	0.23	0.32
D	12.65	12.95
E	7.40	7.60
e	1.27 BSC	
H	10.05	10.55
h	0.25	0.75
L	0.50	0.90
θ	0°	7°

RECOMMENDED SOLDERING FOOTPRINT*

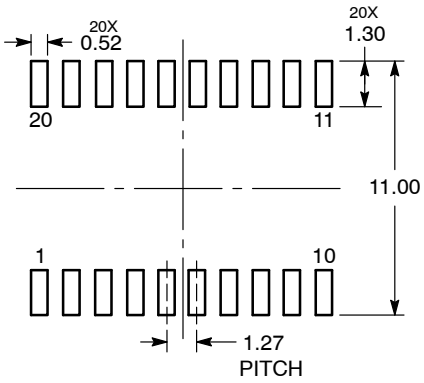

DIMENSIONS: MILLIMETERS

*For additional information on our Pb−Free strategy and soldering details, please download the ON Semiconductor Soldering and Mounting Techniques Reference Manual, SOLDERRM/D.

GENERIC MARKING DIAGRAM*

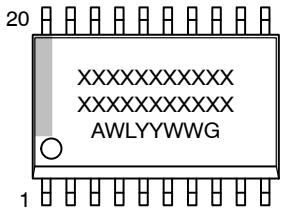

XXXXX = Specific Device Code
A = Assembly Location
WL = Wafer Lot
YY = Year
WW = Work Week
G = Pb−Free Package

*This information is generic. Please refer to device data sheet for actual part marking. Pb−Free indicator, “G” or microdot “▪”, may or may not be present. Some products may not follow the Generic Marking.

DOCUMENT NUMBER:	**98ASB42343B**	Electronic versions are uncontrolled except when accessed directly from the Document Repository. Printed versions are uncontrolled except when stamped “CONTROLLED COPY” in red.
DESCRIPTION:	**SOIC−20 WB**	**PAGE 1 OF 1**

onsemi and ONSEMI. are trademarks of Semiconductor Components Industries, LLC dba **onsemi** or its subsidiaries in the United States and/or other countries. **onsemi** reserves the right to make changes without further notice to any products herein. **onsemi** makes no warranty, representation or guarantee regarding the suitability of its products for any particular purpose, nor does **onsemi** assume any liability arising out of the application or use of any product or circuit, and specifically disclaims any and all liability, including without limitation special, consequential or incidental damages. **onsemi** does not convey any license under its patent rights nor the rights of others.

© Semiconductor Components Industries, LLC, 2019

MECHANICAL CASE OUTLINE
PACKAGE DIMENSIONS

ON Semiconductor®

TSSOP−20 WB
CASE 948E
ISSUE D

DATE 17 FEB 2016

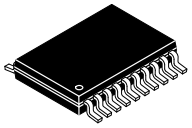

SCALE 2:1

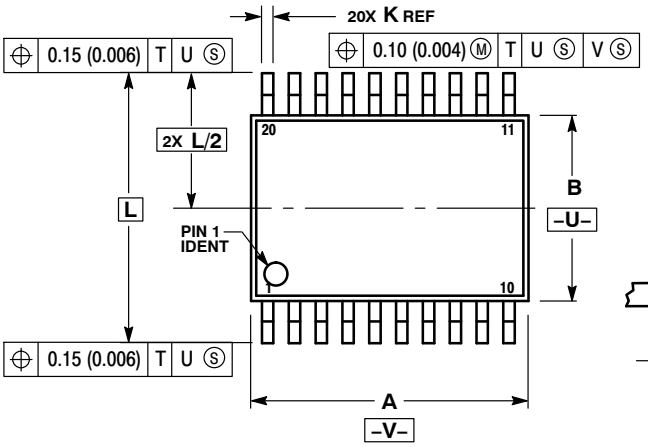

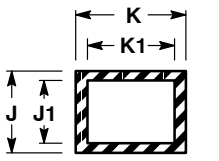

SECTION N−N

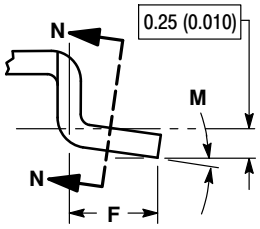

DETAIL E

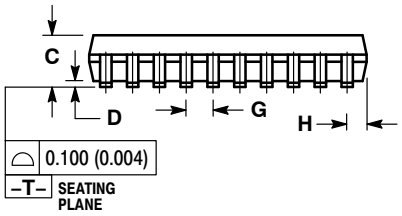

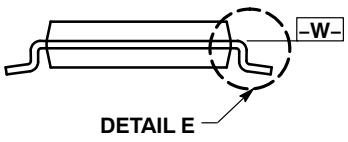

NOTES:
1. DIMENSIONING AND TOLERANCING PER ANSI Y14.5M, 1982.
2. CONTROLLING DIMENSION: MILLIMETER.
3. DIMENSION A DOES NOT INCLUDE MOLD FLASH, PROTRUSIONS OR GATE BURRS. MOLD FLASH OR GATE BURRS SHALL NOT EXCEED 0.15 (0.006) PER SIDE.
4. DIMENSION B DOES NOT INCLUDE INTERLEAD FLASH OR PROTRUSION. INTERLEAD FLASH OR PROTRUSION SHALL NOT EXCEED 0.25 (0.010) PER SIDE.
5. DIMENSION K DOES NOT INCLUDE DAMBAR PROTRUSION. ALLOWABLE DAMBAR PROTRUSION SHALL BE 0.08 (0.003) TOTAL IN EXCESS OF THE K DIMENSION AT MAXIMUM MATERIAL CONDITION.
6. TERMINAL NUMBERS ARE SHOWN FOR REFERENCE ONLY.
7. DIMENSION A AND B ARE TO BE DETERMINED AT DATUM PLANE −W−.

	MILLIMETERS		INCHES	
DIM	MIN	MAX	MIN	MAX
A	6.40	6.60	0.252	0.260
B	4.30	4.50	0.169	0.177
C	---	1.20	---	0.047
D	0.05	0.15	0.002	0.006
F	0.50	0.75	0.020	0.030
G	0.65 BSC		0.026 BSC	
H	0.27	0.37	0.011	0.015
J	0.09	0.20	0.004	0.008
J1	0.09	0.16	0.004	0.006
K	0.19	0.30	0.007	0.012
K1	0.19	0.25	0.007	0.010
L	6.40 BSC		0.252 BSC	
M	0°	8°	0°	8°

SOLDERING FOOTPRINT

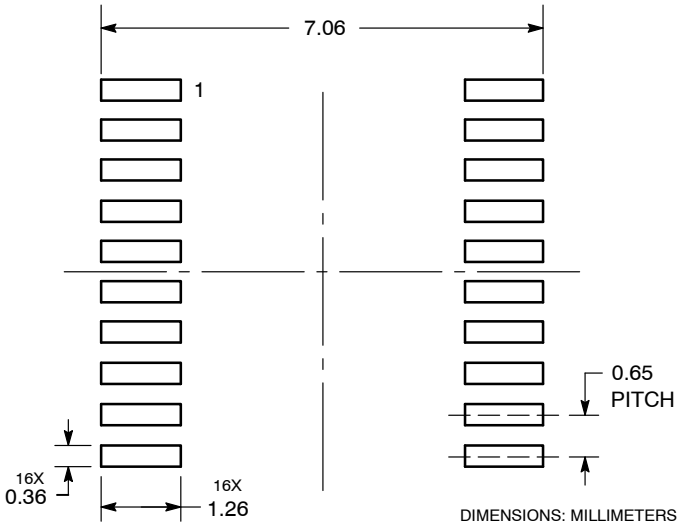

DIMENSIONS: MILLIMETERS

GENERIC MARKING DIAGRAM*

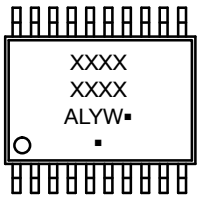

A = Assembly Location
L = Wafer Lot
Y = Year
W = Work Week
▪ = Pb−Free Package

(Note: Microdot may be in either location)

*This information is generic. Please refer to device data sheet for actual part marking. Pb−Free indicator, “G” or microdot “ ▪”, may or may not be present.

DOCUMENT NUMBER:	98ASH70169A	Electronic versions are uncontrolled except when accessed directly from the Document Repository. Printed versions are uncontrolled except when stamped “CONTROLLED COPY” in red.
DESCRIPTION:	TSSOP−20 WB	PAGE 1 OF 1

ON Semiconductor and ON are trademarks of Semiconductor Components Industries, LLC dba ON Semiconductor or its subsidiaries in the United States and/or other countries. ON Semiconductor reserves the right to make changes without further notice to any products herein. ON Semiconductor makes no warranty, representation or guarantee regarding the suitability of its products for any particular purpose, nor does ON Semiconductor assume any liability arising out of the application or use of any product or circuit, and specifically disclaims any and all liability, including without limitation special, consequential or incidental damages. ON Semiconductor does not convey any license under its patent rights nor the rights of others.

© Semiconductor Components Industries, LLC, 2019

onsemi, ONSEMI , and other names, marks, and brands are registered and/or common law trademarks of Semiconductor Components Industries, LLC dba "**onsemi**" or its affiliates and/or subsidiaries in the United States and/or other countries. **onsemi** owns the rights to a number of patents, trademarks, copyrights, trade secrets, and other intellectual property. A listing of **onsemi**'s product/patent coverage may be accessed at www.onsemi.com/site/pdf/Patent−Marking.pdf. **onsemi** reserves the right to make changes at any time to any products or information herein, without notice. The information herein is provided "as−is" and **onsemi** makes no warranty, representation or guarantee regarding the accuracy of the information, product features, availability, functionality, or suitability of its products for any particular purpose, nor does **onsemi** assume any liability arising out of the application or use of any product or circuit, and specifically disclaims any and all liability, including without limitation special, consequential or incidental damages. Buyer is responsible for its products and applications using **onsemi** products, including compliance with all laws, regulations and safety requirements or standards, regardless of any support or applications information provided by **onsemi**. "Typical" parameters which may be provided in **onsemi** data sheets and/or specifications can and do vary in different applications and actual performance may vary over time. All operating parameters, including "Typicals" must be validated for each customer application by customer's technical experts. **onsemi** does not convey any license under any of its intellectual property rights nor the rights of others. **onsemi** products are not designed, intended, or authorized for use as a critical component in life support systems or any FDA Class 3 medical devices or medical devices with a same or similar classification in a foreign jurisdiction or any devices intended for implantation in the human body. Should Buyer purchase or use **onsemi** products for any such unintended or unauthorized application, Buyer shall indemnify and hold **onsemi** and its officers, employees, subsidiaries, affiliates, and distributors harmless against all claims, costs, damages, and expenses, and reasonable attorney fees arising out of, directly or indirectly, any claim of personal injury or death associated with such unintended or unauthorized use, even if such claim alleges that **onsemi** was negligent regarding the design or manufacture of the part. **onsemi** is an Equal Opportunity/Affirmative Action Employer. This literature is subject to all applicable copyright laws and is not for resale in any manner.

PUBLICATION ORDERING INFORMATION

LITERATURE FULFILLMENT:
Email Requests to: orderlit@onsemi.com

onsemi Website: www.onsemi.com

TECHNICAL SUPPORT
North American Technical Support:
Voice Mail: 1 800−282−9855 Toll Free USA/Canada
Phone: 011 421 33 790 2910

Europe, Middle East and Africa Technical Support:
Phone: 00421 33 790 2910
For additional information, please contact your local Sales Representative

◊