MC74HC589A

8-Bit Serial or Parallel-Input/Serial-Output Shift Register with 3-State Output

High−Performance Silicon−Gate CMOS

The MC74HC589A device consists of an 8−bit storage latch which feeds parallel data to an 8−bit shift register. Data can also be loaded serially (see the Function Table). The shift register output, Q_H, is a 3−state output, allowing this device to be used in bus−oriented systems.

The HC589A directly interfaces with the SPI serial data port on CMOS MPUs and MCUs.

Features

- Output Drive Capability: 15 LSTTL Loads
- Outputs Directly Interface to CMOS, NMOS, and TTL
- Operating Voltage Range: 2.0 to 6.0 V
- Low Input Current: 1 μA
- High Noise Immunity Characteristic of CMOS Devices
- In Compliance with the Requirements Defined by JEDEC Standard No. 7 A
- Chip Complexity: 526 FETs or 131.5 Equivalent Gates
- NLV Prefix for Automotive and Other Applications Requiring Unique Site and Control Change Requirements; AEC−Q100 Qualified and PPAP Capable
- These Devices are Pb−Free, Halogen Free and are RoHS Compliant

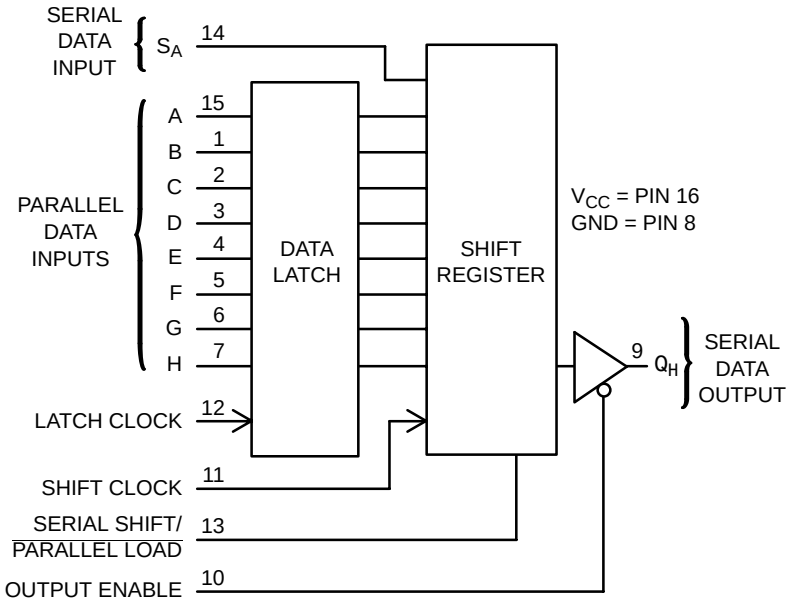

Figure 1. Logic Diagram

ON Semiconductor®

http://onsemi.com

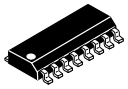

SOIC−16
D SUFFIX
CASE 751B

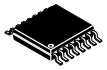

TSSOP−16
DT SUFFIX
CASE 948F

PIN ASSIGNMENT

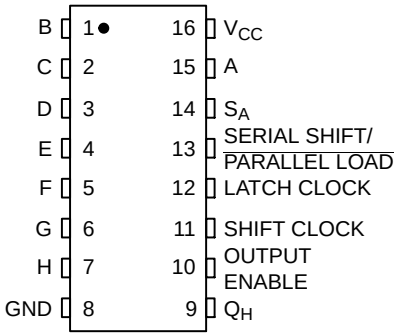

MARKING DIAGRAMS



SOIC−16

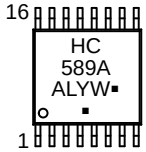

TSSOP−16

A = Assembly Location
WL, L = Wafer Lot
YY, Y = Year
WW, W = Work Week
G or ▪ = Pb−Free Package

(Note: Microdot may be in either location)

ORDERING INFORMATION

See detailed ordering and shipping information in the package dimensions section on page 10 of this data sheet.

© Semiconductor Components Industries, LLC, 2014

MAXIMUM RATINGS

Symbol	Parameter		Value	Unit
V_{CC}	DC Supply Voltage	(Referenced to GND)	−0.5 to +7.0	V
V_{in}	DC Input Voltage	(Referenced to GND)	−0.5 ≤ V_{CC} + 0.5	V
V_{out}	DC Output Voltage	(Referenced to GND)	−0.5 ≤ V_{CC} + 0.5	V
I_{in}	DC Input Current, per Pin		±20	mA
I_{out}	DC Output Current, per Pin		±35	mA
I_{CC}	DC Supply Current, V_{CC} and GND Pins		±75	mA
I_{GND}	DC Ground Current per Ground Pin		±75	mA
T_{STG}	Storage Temperature Range		−65 to +150	°C
T_L	Lead Temperature, 1 mm from Case for 10 Seconds		260	°C
T_J	Junction Temperature Under Bias		+150	°C
θ_{JA}	Thermal Resistance	PDIP SOIC TSSOP	78 112 148	°C/W
P_D	Power Dissipation in Still Air at 85°C	PDIP SOIC TSSOP	750 500 450	mW
MSL	Moisture Sensitivity		Level 1	
F_R	Flammability Rating	Oxygen Index: 30% − 35%	UL 94 V−0 @ 0.125 in	
V_{ESD}	ESD Withstand Voltage	Human Body Model (Note 1) Machine Model (Note 2) Charged Device Model (Note 3)	> 4000 > 200 > 1000	V
$I_{Latchup}$	Latchup Performance	Above V_{CC} and Below GND at 85°C (Note 4)	±300	mA

Stresses exceeding those listed in the Maximum Ratings table may damage the device. If any of these limits are exceeded, device functionality should not be assumed, damage may occur and reliability may be affected.

1. Tested to EIA/JESD22−A114−A.
2. Tested to EIA/JESD22−A115−A.
3. Tested to JESD22−C101−A.
4. Tested to EIA/JESD78.

RECOMMENDED OPERATING CONDITIONS

Symbol	Parameter		Min	Max	Unit
V_{CC}	DC Supply Voltage	(Referenced to GND)	2.0	6.0	V
V_{in}, V_{out}	DC Input Voltage, Output Voltage	(Referenced to GND)	0	V_{CC}	V
T_A	Operating Temperature, All Package Types		−55	+125	°C
t_r, t_f	Input Rise and Fall Time (Figure 2)	V_{CC} = 2.0 V V_{CC} = 3.0 V V_{CC} = 4.5 V V_{CC} = 6.0 V	0 0 0	1000 800 500 400	ns

Functional operation above the stresses listed in the Recommended Operating Ranges is not implied. Extended exposure to stresses beyond the Recommended Operating Ranges limits may affect device reliability.

5. Unused inputs may not be left open. All inputs must be tied to a high−logic voltage level or a low−logic input voltage level.

DC ELECTRICAL CHARACTERISTICS (Voltages Referenced to GND)

Symbol	Parameter	Test Conditions	V_{CC} V	Guaranteed Limit −55°C to 25°C	Guaranteed Limit ≤ 85°C	Guaranteed Limit ≤ 125°C	Unit
V_{IH}	Minimum High−Level Input Voltage	V_{out} = 0.1 V or V_{CC} − 0.1 V $\|I_{out}\| \le 20$ μA	2.0 3.0 4.5 6.0	1.5 2.1 3.15 4.2	1.5 2.1 3.15 4.2	1.5 2.1 3.15 4.2	V
V_{IL}	Maximum Low−Level Input Voltage	V_{out} = 0.1 V or V_{CC} − 0.1 V $\|I_{out}\| \le 20$ μA	2.0 3.0 4.5 6.0	0.5 0.9 1.35 1.8	0.5 0.9 1.35 1.8	0.5 0.9 1.35 1.8	V
V_{OH}	Minimum High−Level Output Voltage	V_{in} = V_{IH} or V_{IL} $\|I_{out}\| \le 20$ μA	2.0 4.5 6.0	1.9 4.4 5.9	1.9 4.4 5.9	1.9 4.4 5.9	V
		V_{in} = V_{IH} or V_{IL} $\|I_{out}\| \le 2.4$ mA $\|I_{out}\| \le 6.0$ mA $\|I_{out}\| \le 7.8$ mA	3.0 4.5 6.0	2.48 3.98 5.48	2.34 3.84 5.34	2.20 3.70 5.20	
V_{OL}	Maximum Low−Level Output Voltage	V_{in} = V_{IH} $\|I_{out}\| \le 20$ μA	2.0 4.5 6.0	0.1 0.1 0.1	0.1 0.1 0.1	0.1 0.1 0.1	V
		V_{in} = V_{IH} or V_{IL} $\|I_{out}\| \le 2.4$ mA $\|I_{out}\| \le 6.0$ mA $\|I_{out}\| \le 7.8$ mA	3.0 4.5 6.0	0.26 0.26 0.26	0.33 0.33 0.33	0.40 0.40 0.40	
I_{in}	Maximum Input Leakage Current	V_{in} = V_{CC} or GND	6.0	±0.1	±1.0	±1.0	μA
I_{OZ}	Maximum Three−State Leakage Current	Output in High−Impedance State V_{in} = V_{IL} or V_{IH} V_{out} = V_{CC} or GND	6.0	±0.5	±5.0	±10	μA
I_{CC}	Maximum Quiescent Supply Current (per Package)	V_{in} = V_{CC} or GND I_{out} = 0 μA	6.0	4	40	160	μA

AC ELECTRICAL CHARACTERISTICS (C_L = 50 pF, Input $t_r = t_f$ = 6 ns)

Symbol	Parameter	V_{CC} V	Guaranteed Limit −55°C to 25°C	Guaranteed Limit ≤ 85°C	Guaranteed Limit ≤ 125°C	Unit
f_{max}	Maximum Clock Frequency (50% Duty Cycle) (Figures 3 and9)	2.0 3.0 4.5 6.0	6.0 15 30 35	4.8 10 24 28	4.0 8.0 20 24	MHz
t_{PLH}, t_{PHL}	Maximum Propagation Delay, Latch Clock to Q_H (Figures 2 and 9)	2.0 3.0 4.5 6.0	175 100 40 30	225 110 50 40	275 125 60 50	ns
t_{PLH}, t_{PHL}	Maximum Propagation Delay, Shift Clock to Q_H (Figures 3 and 9)	2.0 3.0 4.5 6.0	160 90 30 25	200 130 40 30	240 160 48 40	ns
t_{PLH}, t_{PHL}	Maximum Propagation Delay, Serial Shift/$\overline{\text{Parallel Load}}$ to Q_H (Figures 5 and 9)	2.0 3.0 4.5 6.0	160 90 30 25	200 130 40 30	240 160 48 40	ns
t_{PLZ}, t_{PHZ}	Maximum Propagation Delay, Output Enable to Q_H (Figures 4 and 10)	2.0 3.0 4.5 6.0	150 80 27 23	170 100 30 25	200 130 40 30	ns
t_{PZL}, t_{PZH}	Maximum Propagation Delay, Output Enable to Q_H (Figures 4 and 10)	2.0 3.0 4.5 6.0	150 80 27 23	170 100 30 25	200 130 40 30	ns
t_{TLH}, t_{THL}	Maximum Output Transition Time, Any Output (Figures 2 and 9)	2.0 3.0 4.5 6.0	60 23 12 10	75 27 15 13	90 31 18 15	ns
C_{in}	Maximum Input Capacitance	−	10	10	10	pF
C_{out}	Maximum Three−State Output Capacitance (Output in High−Impedance State)	−	15	15	15	pF

		Typical @ 25°C, V_{CC} = 5.0 V	
C_{PD}	Power Dissipation Capacitance (per Package)*	50	pF

*Used to determine the no−load dynamic power consumption: $P_D = C_{PD} V_{CC}^2 f + I_{CC} V_{CC}$.

TIMING REQUIREMENTS (Input $t_r = t_f = 6$ ns)

Symbol	Parameter	V_{CC} V	Guaranteed Limit −55°C to 25°C	Guaranteed Limit ≤ 85°C	Guaranteed Limit ≤ 125°C	Unit
t_{su}	Minimum Setup Time, A−H to Latch Clock (Figure 6)	2.0 3.0 4.5 6.0	100 40 20 17	125 50 25 21	150 60 30 26	ns
t_{su}	Minimum Setup Time, Serial Data Input S_A to Shift Clock (Figure 7)	2.0 3.0 4.5 6.0	100 40 20 17	125 50 25 21	150 60 30 26	ns
t_{su}	Minimum Setup Time, Serial Shift/$\overline{\text{Parallel Load}}$ to Shift Clock (Figure 8)	2.0 3.0 4.5 6.0	100 40 20 17	125 50 25 21	150 60 30 26	ns
t_h	Minimum Hold Time, Latch Clock to A−H (Figure 6)	2.0 3.0 4.5 6.0	25 10 5 5	30 12 6 6	40 15 8 7	ns
t_h	Minimum Hold Time, Shift Clock to Serial Data Input S_A (Figure 7)	2.0 3.0 4.5 6.0	5 5 5 5	5 5 5 5	5 5 5 5	ns
t_w	Minimum Pulse Width, Shift Clock (Figure 3)	2.0 3.0 4.5 6.0	75 40 15 13	95 50 19 16	110 60 23 19	ns
t_w	Minimum Pulse Width, Latch Clock (Figure 2)	2.0 3.0 4.5 6.0	80 40 16 14	100 50 20 17	120 60 24 20	ns
t_w	Minimum Pulse Width, Serial Shift/$\overline{\text{Parallel Load}}$ (Figure 5)	2.0 3.0 4.5 6.0	80 40 16 14	100 50 20 17	120 60 24 20	ns
t_r, t_f	Maximum Input Rise and Fall Times (Figure 2)	2.0 3.0 4.5 6.0	1000 800 500 400	1000 800 500 400	1000 800 500 400	ns

FUNCTION TABLE

Operation	Inputs						Resulting Function		
	Output Enable	Serial Shift/ $\overline{\text{Parallel Load}}$	Latch Clock	Shift Clock	Serial Input S_A	Parallel Inputs A−H	Data Latch Contents	Shift Register Contents	Output Q_H
Force Output into High Impedance State	H	X	X	X	X	X	X	X	Z
Load Parallel Data into Data Latch	L	H	⎍	L, H, ⎍	X	a−h	a−h	U	U
Transfer Latch Contents to Shift Register	L	L	L, H, ⎍	X	X	X	U	$LR_N \rightarrow SR_N$	LR_H
Contents of Input Latch and Shift Register are Unchanged	L	H	L, H, ⎍	L, H, ⎍	X	X	U	U	U
Load Parallel Data into Data Latch and Shift Register	L	L	⎍	X	X	a−h	a−h	a−h	h
Shift Serial Data into Shift Register	L	H	X	⎍	D	X	*	SR_A = D, $SR_N \rightarrow SR_{N+1}$	$SR_G \rightarrow SR_H$
Load Parallel Data in Data Latch and Shift Serial Data into Shift Register	L	H	⎍	⎍	D	a−h	a−h	SR_A = D, $SR_N \rightarrow SR_{N+1}$	$SR_G \rightarrow SR_H$

LR = latch register contents
SR = shift register contents
a−h = data at parallel data inputs A−H
D = data (L, H) at serial data input S_A
U = remains unchanged
X = don't care
Z = high impedance
* = depends on Latch Clock input

SWITCHING WAVEFORMS

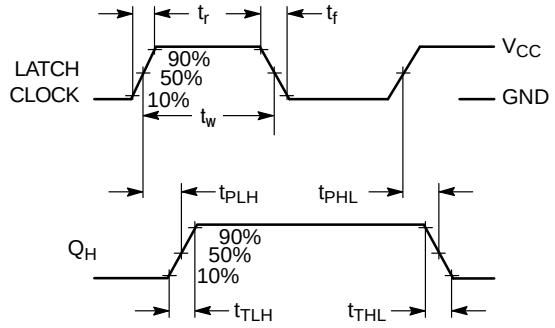

Figure 2. (Serial Shift/$\overline{\text{Parallel Load}}$ = L)

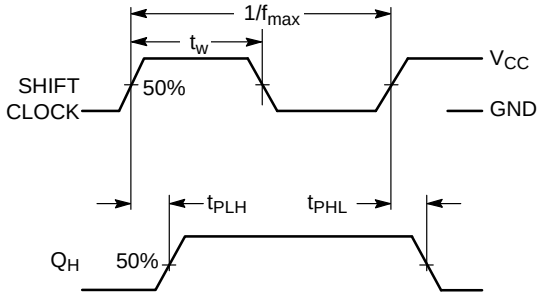

Figure 3. (Serial Shift/$\overline{\text{Parallel Load}}$ = H)

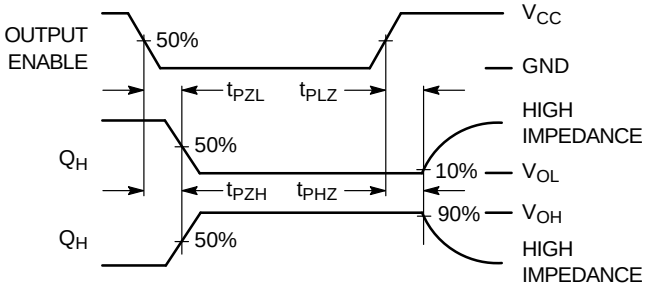

Figure 4.

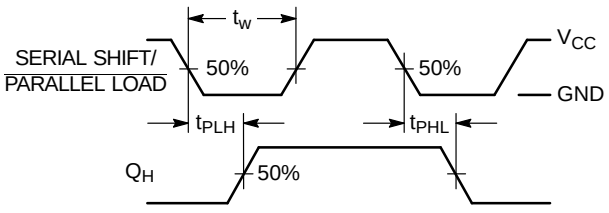

Figure 5.

SWITCHING WAVEFORMS

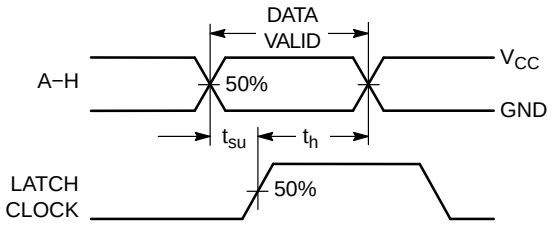

Figure 6.

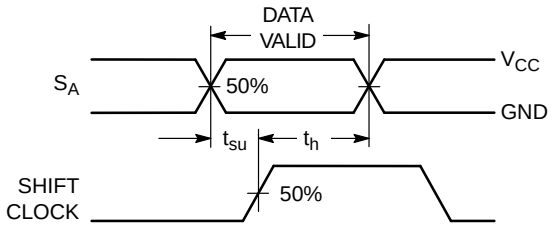

Figure 7.

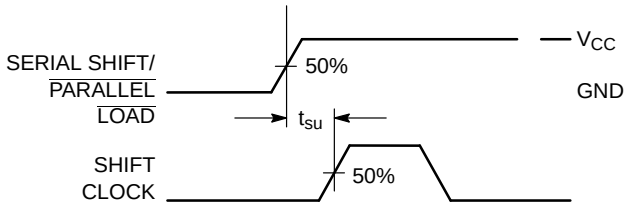

Figure 8.

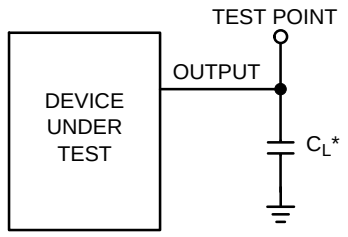

*Includes all probe and jig capacitance.

Figure 9. Test Circuit

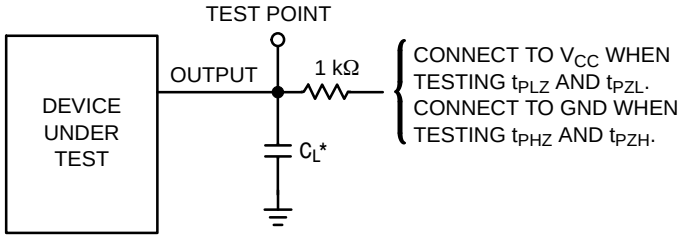

*Includes all probe and jig capacitance.

Figure 10. Test Circuit

PIN DESCRIPTIONS

Data Inputs

A, B, C, D, E, F, G, H (Pins 15, 1, 2, 3, 4, 5, 6, 7)

Parallel data inputs. Data on these inputs are stored in the data latch on the rising edge of the Latch Clock input.

S_A (Pin 14)

Serial data input. Data on this input is shifted into the shift register on the rising edge of the Shift Clock input if Serial Shift/$\overline{\text{Parallel Load}}$ is high. Data on this input is ignored when Serial Shift/$\overline{\text{Parallel Load}}$ is low.

Control Inputs

Serial Shift/$\overline{\text{Parallel Load}}$ (Pin 13)

Shift register mode control. When a high level is applied to this pin, the shift register is allowed to serially shift data. When a low level is applied to this pin, the shift register accepts parallel data from the data latch.

Shift Clock (Pin 11)

Serial shift clock. A low−to−high transition on this input shifts data on the serial data input into the shift register and data in stage H is shifted out Q_H, being replaced by the data previously stored in stage G.

Latch Clock (Pin 12)

Data latch clock. A low−to−high transition on this input loads the parallel data on inputs A−H into the data latch.

Output Enable (Pin 10)

Active−low output enable A high level applied to this pin forces the Q_H output into the high impedance state. A low level enables the output. This control does not affect the state of the input latch or the shift register.

Output

Q_H (Pin 9)

Serial data output. This pin is the output from the last stage of the shift register. This is a 3−state output.

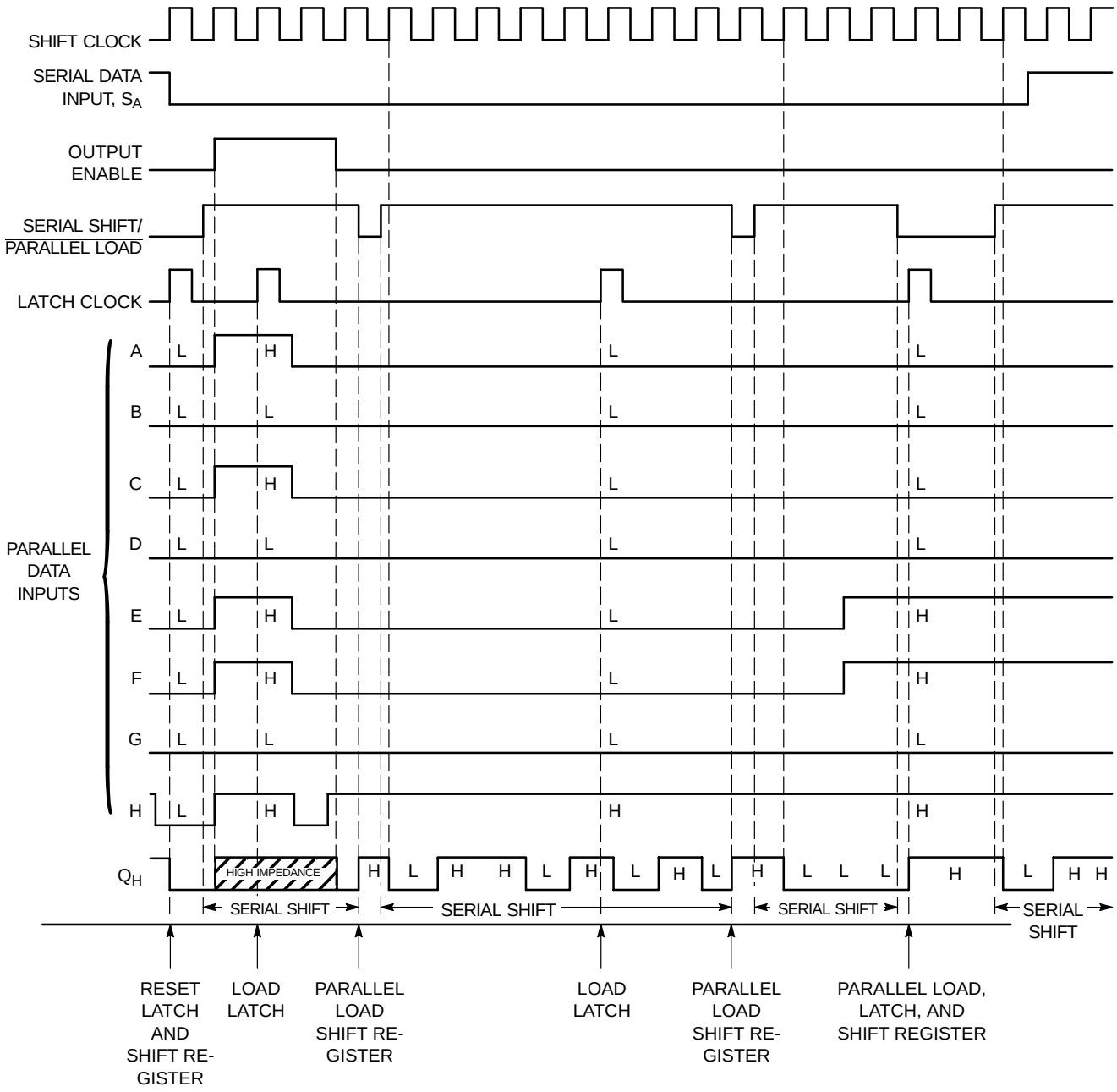

Figure 11. Timing Diagram

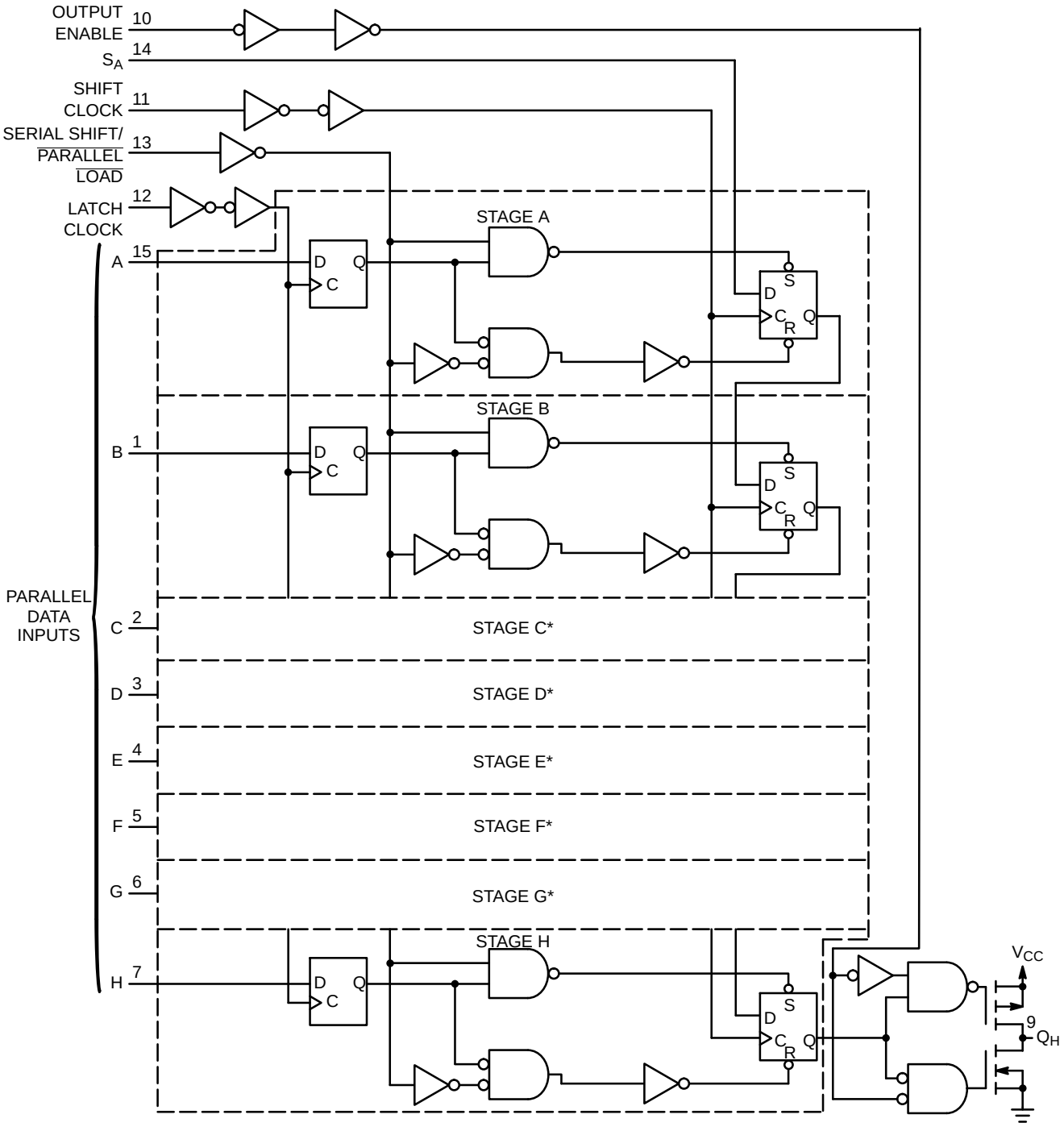

*Stages C thru G (not shown in detail) are identical to stages A and B above.

Figure 12. Logic Detail

ORDERING INFORMATION

Device	Package	Shipping†
MC74HC589ADG	SOIC−16 (Pb−Free)	48 Units / Rail
NLV74HC589ADG*	SOIC−16 (Pb−Free)	48 Units / Rail
MC74HC589ADR2G	SOIC−16 (Pb−Free)	2500 Tape & Reel
NLV74HC589ADR2G*	SOIC−16 (Pb−Free)	2500 Tape & Reel
MC74HC589ADTR2G	TSSOP−16 (Pb−Free)	2500 Tape & Reel
NLV74HC589ADTR2G*	TSSOP−16 (Pb−Free)	2500 Tape & Reel

†For information on tape and reel specifications, including part orientation and tape sizes, please refer to our Tape and Reel Packaging Specifications Brochure, BRD8011/D.

*NLV Prefix for Automotive and Other Applications Requiring Unique Site and Control Change Requirements; AEC−Q100 Qualified and PPAP Capable.

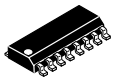

SCALE 1:1

SOIC–16
CASE 751B–05
ISSUE K

DATE 29 DEC 2006

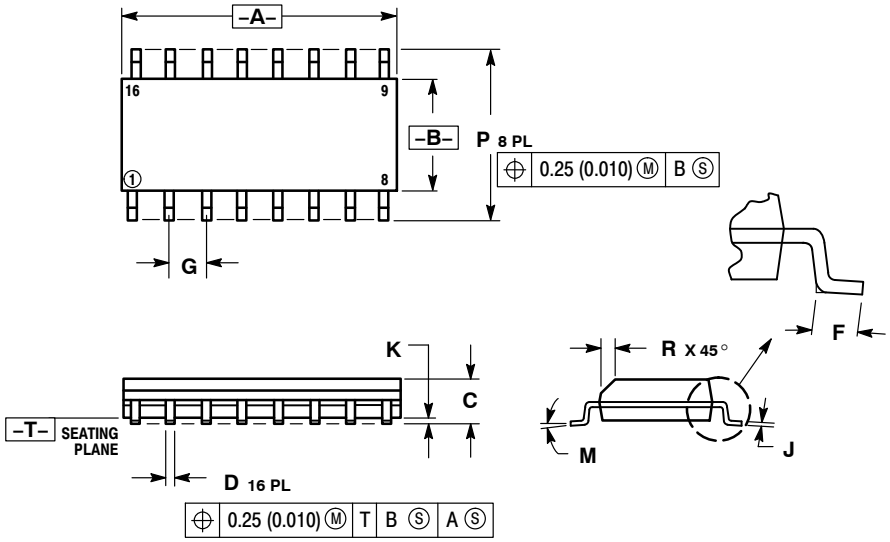

NOTES:
1. DIMENSIONING AND TOLERANCING PER ANSI Y14.5M, 1982.
2. CONTROLLING DIMENSION: MILLIMETER.
3. DIMENSIONS A AND B DO NOT INCLUDE MOLD PROTRUSION.
4. MAXIMUM MOLD PROTRUSION 0.15 (0.006) PER SIDE.
5. DIMENSION D DOES NOT INCLUDE DAMBAR PROTRUSION. ALLOWABLE DAMBAR PROTRUSION SHALL BE 0.127 (0.005) TOTAL IN EXCESS OF THE D DIMENSION AT MAXIMUM MATERIAL CONDITION.

	MILLIMETERS		INCHES	
DIM	MIN	MAX	MIN	MAX
A	9.80	10.00	0.386	0.393
B	3.80	4.00	0.150	0.157
C	1.35	1.75	0.054	0.068
D	0.35	0.49	0.014	0.019
F	0.40	1.25	0.016	0.049
G	1.27 BSC		0.050 BSC	
J	0.19	0.25	0.008	0.009
K	0.10	0.25	0.004	0.009
M	0°	7°	0°	7°
P	5.80	6.20	0.229	0.244
R	0.25	0.50	0.010	0.019

STYLE 1:
PIN 1. COLLECTOR
2. BASE
3. EMITTER
4. NO CONNECTION
5. EMITTER
6. BASE
7. COLLECTOR
8. COLLECTOR
9. BASE
10. EMITTER
11. NO CONNECTION
12. EMITTER
13. BASE
14. COLLECTOR
15. EMITTER
16. COLLECTOR

STYLE 2:
PIN 1. CATHODE
2. ANODE
3. NO CONNECTION
4. CATHODE
5. CATHODE
6. NO CONNECTION
7. ANODE
8. CATHODE
9. CATHODE
10. ANODE
11. NO CONNECTION
12. CATHODE
13. CATHODE
14. NO CONNECTION
15. ANODE
16. CATHODE

STYLE 3:
PIN 1. COLLECTOR, DYE #1
2. BASE, #1
3. EMITTER, #1
4. COLLECTOR, #1
5. COLLECTOR, #2
6. BASE, #2
7. EMITTER, #2
8. COLLECTOR, #2
9. COLLECTOR, #3
10. BASE, #3
11. EMITTER, #3
12. COLLECTOR, #3
13. COLLECTOR, #4
14. BASE, #4
15. EMITTER, #4
16. COLLECTOR, #4

STYLE 4:
PIN 1. COLLECTOR, DYE #1
2. COLLECTOR, #1
3. COLLECTOR, #2
4. COLLECTOR, #2
5. COLLECTOR, #3
6. COLLECTOR, #3
7. COLLECTOR, #4
8. COLLECTOR, #4
9. BASE, #4
10. EMITTER, #4
11. BASE, #3
12. EMITTER, #3
13. BASE, #2
14. EMITTER, #2
15. BASE, #1
16. EMITTER, #1

STYLE 5:
PIN 1. DRAIN, DYE #1
2. DRAIN, #1
3. DRAIN, #2
4. DRAIN, #2
5. DRAIN, #3
6. DRAIN, #3
7. DRAIN, #4
8. DRAIN, #4
9. GATE, #4
10. SOURCE, #4
11. GATE, #3
12. SOURCE, #3
13. GATE, #2
14. SOURCE, #2
15. GATE, #1
16. SOURCE, #1

STYLE 6:
PIN 1. CATHODE
2. CATHODE
3. CATHODE
4. CATHODE
5. CATHODE
6. CATHODE
7. CATHODE
8. CATHODE
9. ANODE
10. ANODE
11. ANODE
12. ANODE
13. ANODE
14. ANODE
15. ANODE
16. ANODE

STYLE 7:
PIN 1. SOURCE N-CH
2. COMMON DRAIN (OUTPUT)
3. COMMON DRAIN (OUTPUT)
4. GATE P-CH
5. COMMON DRAIN (OUTPUT)
6. COMMON DRAIN (OUTPUT)
7. COMMON DRAIN (OUTPUT)
8. SOURCE P-CH
9. SOURCE P-CH
10. COMMON DRAIN (OUTPUT)
11. COMMON DRAIN (OUTPUT)
12. COMMON DRAIN (OUTPUT)
13. GATE N-CH
14. COMMON DRAIN (OUTPUT)
15. COMMON DRAIN (OUTPUT)
16. SOURCE N-CH

SOLDERING FOOTPRINT

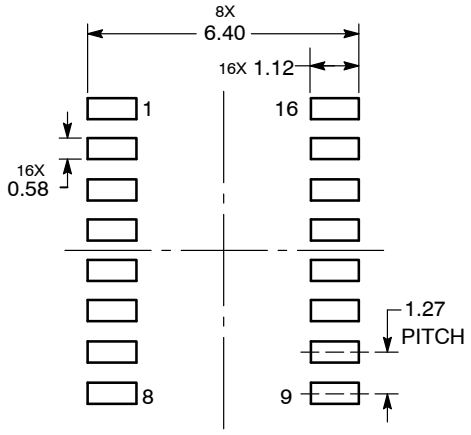

DIMENSIONS: MILLIMETERS

DOCUMENT NUMBER:	98ASB42566B	Electronic versions are uncontrolled except when accessed directly from the Document Repository. Printed versions are uncontrolled except when stamped "CONTROLLED COPY" in red.
DESCRIPTION:	SOIC–16	PAGE 1 OF 1

ON Semiconductor and ON are trademarks of Semiconductor Components Industries, LLC dba ON Semiconductor or its subsidiaries in the United States and/or other countries. ON Semiconductor reserves the right to make changes without further notice to any products herein. ON Semiconductor makes no warranty, representation or guarantee regarding the suitability of its products for any particular purpose, nor does ON Semiconductor assume any liability arising out of the application or use of any product or circuit, and specifically disclaims any and all liability, including without limitation special, consequential or incidental damages. ON Semiconductor does not convey any license under its patent rights nor the rights of others.

© Semiconductor Components Industries, LLC, 2019

MECHANICAL CASE OUTLINE
PACKAGE DIMENSIONS

ON Semiconductor®

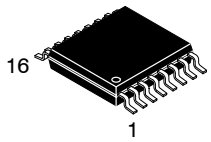

SCALE 2:1

TSSOP−16
CASE 948F−01
ISSUE B

DATE 19 OCT 2006

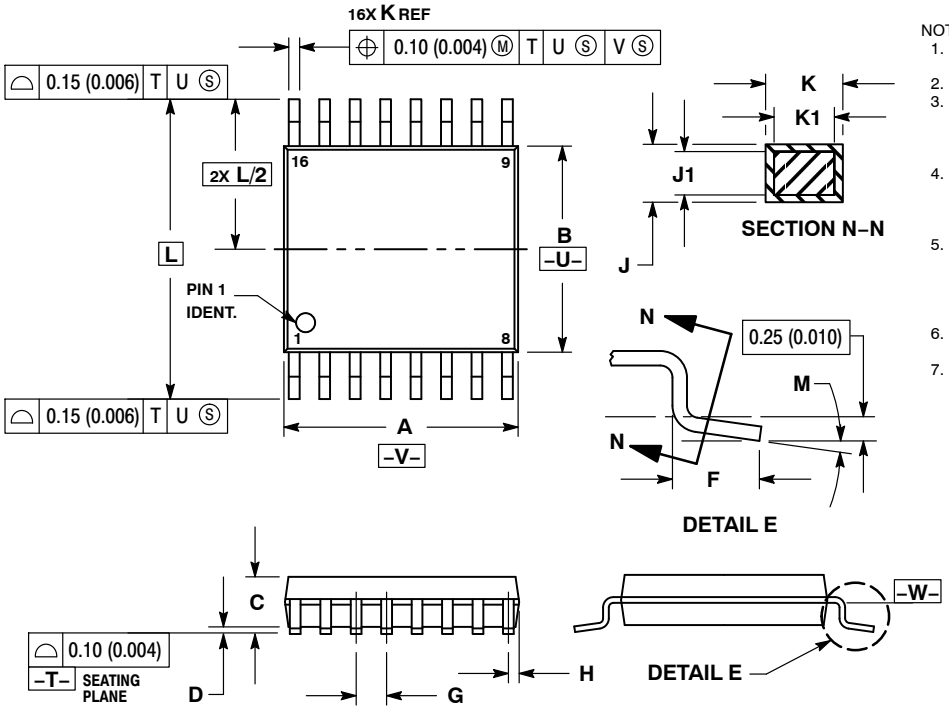

NOTES:
1. DIMENSIONING AND TOLERANCING PER ANSI Y14.5M, 1982.
2. CONTROLLING DIMENSION: MILLIMETER.
3. DIMENSION A DOES NOT INCLUDE MOLD FLASH. PROTRUSIONS OR GATE BURRS. MOLD FLASH OR GATE BURRS SHALL NOT EXCEED 0.15 (0.006) PER SIDE.
4. DIMENSION B DOES NOT INCLUDE INTERLEAD FLASH OR PROTRUSION. INTERLEAD FLASH OR PROTRUSION SHALL NOT EXCEED 0.25 (0.010) PER SIDE.
5. DIMENSION K DOES NOT INCLUDE DAMBAR PROTRUSION. ALLOWABLE DAMBAR PROTRUSION SHALL BE 0.08 (0.003) TOTAL IN EXCESS OF THE K DIMENSION AT MAXIMUM MATERIAL CONDITION.
6. TERMINAL NUMBERS ARE SHOWN FOR REFERENCE ONLY.
7. DIMENSION A AND B ARE TO BE DETERMINED AT DATUM PLANE −W−.

	MILLIMETERS		INCHES	
DIM	MIN	MAX	MIN	MAX
A	4.90	5.10	0.193	0.200
B	4.30	4.50	0.169	0.177
C	−−−	1.20	−−−	0.047
D	0.05	0.15	0.002	0.006
F	0.50	0.75	0.020	0.030
G	0.65 BSC		0.026 BSC	
H	0.18	0.28	0.007	0.011
J	0.09	0.20	0.004	0.008
J1	0.09	0.16	0.004	0.006
K	0.19	0.30	0.007	0.012
K1	0.19	0.25	0.007	0.010
L	6.40 BSC		0.252 BSC	
M	0 °	8 °	0 °	8 °

SOLDERING FOOTPRINT

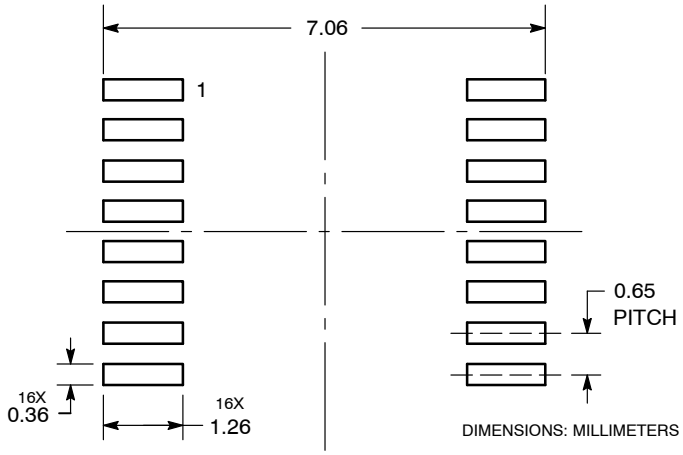

DIMENSIONS: MILLIMETERS

GENERIC MARKING DIAGRAM*

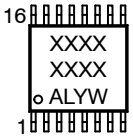

XXXX	= Specific Device Code
A	= Assembly Location
L	= Wafer Lot
Y	= Year
W	= Work Week
G or ▪	= Pb−Free Package

*This information is generic. Please refer to device data sheet for actual part marking. Pb−Free indicator, “G” or microdot “ ▪”, may or may not be present.

DOCUMENT NUMBER:	98ASH70247A	Electronic versions are uncontrolled except when accessed directly from the Document Repository. Printed versions are uncontrolled except when stamped “CONTROLLED COPY” in red.
DESCRIPTION:	TSSOP−16	PAGE 1 OF 1

ON Semiconductor and ON are trademarks of Semiconductor Components Industries, LLC dba ON Semiconductor or its subsidiaries in the United States and/or other countries. ON Semiconductor reserves the right to make changes without further notice to any products herein. ON Semiconductor makes no warranty, representation or guarantee regarding the suitability of its products for any particular purpose, nor does ON Semiconductor assume any liability arising out of the application or use of any product or circuit, and specifically disclaims any and all liability, including without limitation special, consequential or incidental damages. ON Semiconductor does not convey any license under its patent rights nor the rights of others.

© Semiconductor Components Industries, LLC, 2019

onsemi, ONSEMI , and other names, marks, and brands are registered and/or common law trademarks of Semiconductor Components Industries, LLC dba "**onsemi**" or its affiliates and/or subsidiaries in the United States and/or other countries. **onsemi** owns the rights to a number of patents, trademarks, copyrights, trade secrets, and other intellectual property. A listing of **onsemi**'s product/patent coverage may be accessed at www.onsemi.com/site/pdf/Patent−Marking.pdf. **onsemi** reserves the right to make changes at any time to any products or information herein, without notice. The information herein is provided "as−is" and **onsemi** makes no warranty, representation or guarantee regarding the accuracy of the information, product features, availability, functionality, or suitability of its products for any particular purpose, nor does **onsemi** assume any liability arising out of the application or use of any product or circuit, and specifically disclaims any and all liability, including without limitation special, consequential or incidental damages. Buyer is responsible for its products and applications using **onsemi** products, including compliance with all laws, regulations and safety requirements or standards, regardless of any support or applications information provided by **onsemi**. "Typical" parameters which may be provided in **onsemi** data sheets and/or specifications can and do vary in different applications and actual performance may vary over time. All operating parameters, including "Typicals" must be validated for each customer application by customer's technical experts. **onsemi** does not convey any license under any of its intellectual property rights nor the rights of others. **onsemi** products are not designed, intended, or authorized for use as a critical component in life support systems or any FDA Class 3 medical devices or medical devices with a same or similar classification in a foreign jurisdiction or any devices intended for implantation in the human body. Should Buyer purchase or use **onsemi** products for any such unintended or unauthorized application, Buyer shall indemnify and hold **onsemi** and its officers, employees, subsidiaries, affiliates, and distributors harmless against all claims, costs, damages, and expenses, and reasonable attorney fees arising out of, directly or indirectly, any claim of personal injury or death associated with such unintended or unauthorized use, even if such claim alleges that **onsemi** was negligent regarding the design or manufacture of the part. **onsemi** is an Equal Opportunity/Affirmative Action Employer. This literature is subject to all applicable copyright laws and is not for resale in any manner.

PUBLICATION ORDERING INFORMATION

LITERATURE FULFILLMENT:
Email Requests to: orderlit@onsemi.com

onsemi Website: www.onsemi.com

TECHNICAL SUPPORT
North American Technical Support:
Voice Mail: 1 800−282−9855 Toll Free USA/Canada
Phone: 011 421 33 790 2910

Europe, Middle East and Africa Technical Support:
Phone: 00421 33 790 2910
For additional information, please contact your local Sales Representative

◊