Hex D Flip-Flop with Common Clock and Reset

High−Performance Silicon−Gate CMOS

MC74HC174A

The MC74HC174A is identical in pinout to the LS174. The device inputs are compatible with standard CMOS outputs; with pullup resistors, they are compatible with LSTTL outputs.

This device consists of six D flip−flops with common Clock and Reset inputs. Each flip−flop is loaded with a low−to−high transition of the Clock input. Reset is asynchronous and active−low.

Features

- Output Drive Capability: 10 LSTTL Loads
- Outputs Directly Interface to CMOS, NMOS, and TTL
- Operating Voltage Range: 2.0 to 6.0 V
- Low Input Current: 1.0 μA
- In Compliance with the Requirements Defined by JEDEC Standard No. 7 A
- Chip Complexity: 162 FETs or 40.5 Equivalent Gates
- NLV Prefix for Automotive and Other Applications Requiring Unique Site and Control Change Requirements; AEC−Q100 Qualified and PPAP Capable*
- These Devices are Pb−Free, Halogen Free/BFR Free and are RoHS Compliant

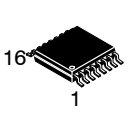

TSSOP−16
DT SUFFIX
CASE 948F

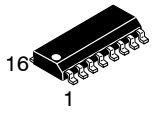

SOIC−16
D SUFFIX
CASE 751B

MARKING DIAGRAMS

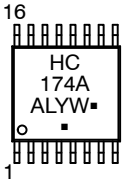



A = Assembly Location
L, WL = Wafer Lot
Y, YY = Year
W, WW = Work Week
G or ▪ = Pb−Free Package

(Note: Microdot may be in either location)

PIN ASSIGNMENT

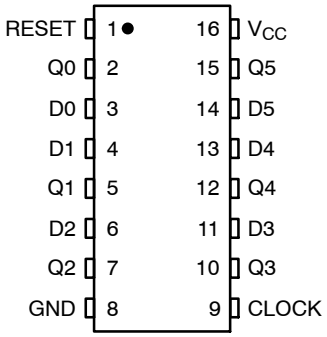

ORDERING INFORMATION

Device	Package	Shipping†
MC74HC174ADR2G	SOIC−16 (Pb−Free)	2500 / Tape & Reel
MC74HC174ADTR2G	TSSOP−16 (Pb−Free)	2500 / Tape & Reel
NLV74HC174ADR2G*	SOIC−16 (Pb−Free)	2500 / Tape & Reel
NLV74HC174ADTR2G*	TSSOP−16 (Pb−Free)	2500 / Tape & Reel

†For information on tape and reel specifications, including part orientation and tape sizes, please refer to our Tape and Reel Packaging Specification Brochure, BRD8011/D.

© Semiconductor Components Industries, LLC, 2012

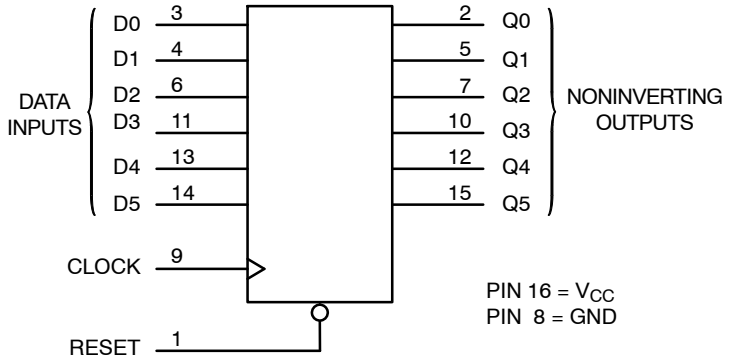

Figure 1. Logic Diagram

FUNCTION TABLE

Inputs			Output
Reset	**Clock**	**D**	**Q**
L	X	X	L
H	↗	H	H
H	↗	L	L
H	L	X	No Change
H	↘	X	No Change

DESIGN/VALUE TABLE

Design Criteria	Value	Units
Internal Gate Count*	40.5	ea.
Internal Gate Propagation Delay	1.5	ns
Internal Gate Power Dissipation	5.0	μW
Speed Power Product	0.0075	pJ

*Equivalent to a two−input NAND gate.

MAXIMUM RATINGS

Symbol	Parameter		Value	Unit
V_{CC}	DC Supply Voltage	(Referenced to GND)	−0.5 to +7.0	V
V_{IN}	DC Input Voltage	(Referenced to GND)	−0.5 to V_{CC} + 0.5	V
V_{OUT}	DC Output Voltage	(Referenced to GND) (Note 1)	−0.5 to V_{CC} + 0.5	V
I_{IN}	DC Input Current, per Pin		±20	mA
I_{OUT}	DC Output Current, per Pin		±25	mA
I_{CC}	DC Supply Current, V_{CC} and GND Pins		±50	mA
T_{STG}	Storage Temperature Range		−65 to +150	°C
T_L	Lead Temperature, 1 mm from Case for 10 Seconds	SOIC, TSSOP	260	°C
T_J	Junction Temperature Under Bias		+150	°C
θ_{JA}	Thermal Resistance	SOIC TSSOP	112 148	°C/W
P_D	Power Dissipation in Still Air at 85°C	SOIC TSSOP	500 450	mW
MSL	Moisture Sensitivity		Level 1	
F_R	Flammability Rating	Oxygen Index: 30−35%	UL 94 V−0 @ 0.125 in.	
V_{ESD}	ESD Withstand Voltage	Human Body Model (Note 2) Machine Model (Note 3) Charged Device Model (Note 4)	> 2000 > 100 > 500	V
$I_{LATCHUP}$	Latchup Performance	Above V_{CC} and Below GND at 85°C (Note 5)	±300	mA

Stresses exceeding those listed in the Maximum Ratings table may damage the device. If any of these limits are exceeded, device functionality should not be assumed, damage may occur and reliability may be affected.

1. I_O absolute maximum rating must be observed.
2. Tested to EIA/JESD22−A114−A.
3. Tested to EIA/JESD22−A115−A.
4. Tested to JESD22−C101−A.
5. Tested to EIA/JESD78.

RECOMMENDED OPERATING CONDITIONS

Symbol	Parameter		Min	Max	Unit
V_{CC}	DC Supply Voltage	(Referenced to GND)	2.0	6.0	V
V_{IN}, V_{OUT}	DC Input Voltage, Output Voltage	(Referenced to GND) (Note 6)	0	V_{CC}	V
T_A	Operating Temperature, All Package Types		−55	+125	°C
t_r, t_f	CLOCK Input Rise and Fall Time (Figure 2)	V_{CC} = 2.0 V V_{CC} = 3.3 V V_{CC} = 4.5 V V_{CC} = 6.0 V	0 0 0 0	1000 700 500 400	ns

Functional operation above the stresses listed in the Recommended Operating Ranges is not implied. Extended exposure to stresses beyond the Recommended Operating Ranges limits may affect device reliability.

6. Unused inputs may not be left open. All inputs must be tied to a high− or low−logic input voltage level.

DC ELECTRICAL CHARACTERISTICS (Voltages Referenced to GND)

Symbol	Parameter	Test Conditions	V_{CC} V	Guaranteed Limit −55°C to 25°C	Guaranteed Limit ≤85°C	Guaranteed Limit ≤125°C	Unit
V_{IH}	Minimum High−Level Input Voltage	V_{OUT} = 0.1 V or V_{CC} − 0.1 V $\|I_{OUT}\| \le 20\ \mu A$	2.0 4.5 6.0	1.5 3.15 4.2	1.5 3.15 4.2	1.5 3.15 4.2	V
V_{IL}	Maximum Low−Level Input Voltage	V_{OUT} = 0.1 V or V_{CC} − 0.1 V $\|I_{OUT}\| \le 20\ \mu A$	2.0 4.5 6.0	0.5 1.35 1.8	0.5 1.35 1.8	0.5 1.35 1.8	V
V_{OH}	Minimum High−Level Output Voltage	$V_{IN} = V_{IH}$ or V_{IL} $\|I_{OUT}\| \le 20\ \mu A$	2.0 4.5 6.0	1.9 4.4 5.9	1.9 4.4 5.9	1.9 4.4 5.9	V
		$V_{IN} = V_{IH}$ or V_{IL} $\|I_{OUT}\| \le 4.0$ mA $\|I_{OUT}\| \le 5.2$ mA	 4.5 6.0	 3.98 5.48	 3.84 5.34	 3.7 5.2	
V_{OL}	Maximum Low−Level Output Voltage	$V_{IN} = V_{IH}$ or V_{IL} $\|I_{OUT}\| \le 20\ \mu A$	2.0 4.5 6.0	0.1 0.1 0.1	0.1 0.1 0.1	0.1 0.1 0.1	V
		$V_{IN} = V_{IH}$ or V_{IL} $\|I_{OUT}\| \le 4.0$ mA $\|I_{OUT}\| \le 5.2$ mA	 4.5 6.0	 0.26 0.26	 0.33 0.33	 0.4 0.4	
I_{IN}	Maximum Input Leakage Current	$V_{IN} = V_{CC}$ or GND	6.0	±0.1	±1.0	±1.0	μA
I_{CC}	Maximum Quiescent Supply Current (per Package)	$V_{IN} = V_{CC}$ or GND I_{OUT} = 0 μA	6.0	4.0	40	160	μA

AC ELECTRICAL CHARACTERISTICS (C_L = 50 pF, Input $t_r = t_f$ = 6.0 ns)

Symbol	Parameter	V_{CC} V	Guaranteed Limit −55°C to 25°C	Guaranteed Limit ≤85°C	Guaranteed Limit ≤125°C	Unit
f_{max}	Maximum Clock Frequency (50% Duty Cycle) (Figures 2 and 5)	2.0 4.5 6.0	6.0 30 35	4.8 24 28	4.0 20 24	MHz
t_{PLH} t_{PHL}	Maximum Propagation Delay, Clock to Q (Figures 3 and 5)	2.0 4.5 6.0	110 22 19	140 28 24	165 33 28	ns
t_{PLH} t_{PHL}	Maximum Propagation Delay, Reset to Q (Figures 2 and 5)	2.0 4.5 6.0	110 21 19	140 28 24	160 32 27	ns
t_{TLH} t_{THL}	Maximum Output Transition Time, Any Output (Figures 2 and 5)	2.0 4.5 6.0	75 15 13	95 19 16	110 22 19	ns
C_{in}	Maximum Input Capacitance		10	10	10	pF

		Typical @ 25°C, V_{CC} = 5.0 V	
C_{PD}	Power Dissipation Capacitance, per Enabled Output (Note 7)	62	pF

7. Used to determine the no−load dynamic power consumption: $P_D = C_{PD} V_{CC}^2 f + I_{CC} V_{CC}$.

TIMING REQUIREMENTS (C_L = 50 pF, Input $t_r = t_f$ = 6.0 ns)

Symbol	Parameter	Figure	V_{CC}	Guaranteed Limit						Unit
				−55°C to 25°C		≤85°C		≤125°C		
			V	Min	Max	Min	Max	Min	Max	
t_{su}	Minimum Setup Time, Data to Clock	4	2.0 4.5 6.0	50 10 9.0		65 13 11		75 15 13		ns
t_h	Minimum Hold Time, Clock to Data	4	2.0 4.5 6.0	5.0 5.0 5.0		5.0 5.0 5.0		5.0 5.0 5.0		ns
t_{rec}	Minimum Recovery Time, Reset Inactive to Clock	3	2.0 4.5 6.0	5.0 5.0 5.0		5.0 5.0 5.0		5.0 5.0 5.0		ns
t_w	Minimum Pulse Width, Clock	2	2.0 4.5 6.0	75 15 13		95 19 16		110 22 19		ns
t_w	Minimum Pulse Width, Reset	3	2.0 4.5 6.0	75 15 13		95 19 16		110 22 19		ns
t_r, t_f	Maximum Input Rise and Fall Times	2	2.0 4.5 6.0		1000 500 400		1000 500 400		1000 500 400	ns

SWITCHING WAVEFORMS AND TEST CIRCUIT

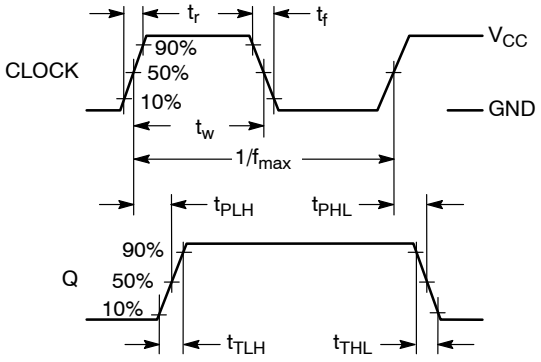

Figure 2. Switching Waveform

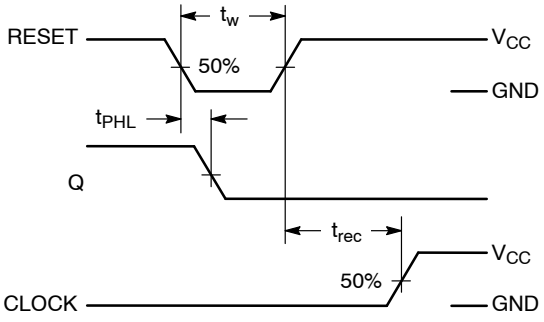

Figure 3. Switching Waveform

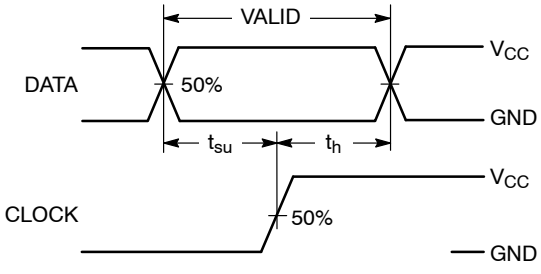

Figure 4. Switching Waveform

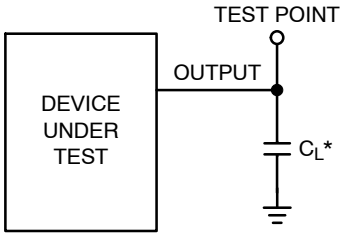

*Includes all probe and jig capacitance

Figure 5. Test Circuit

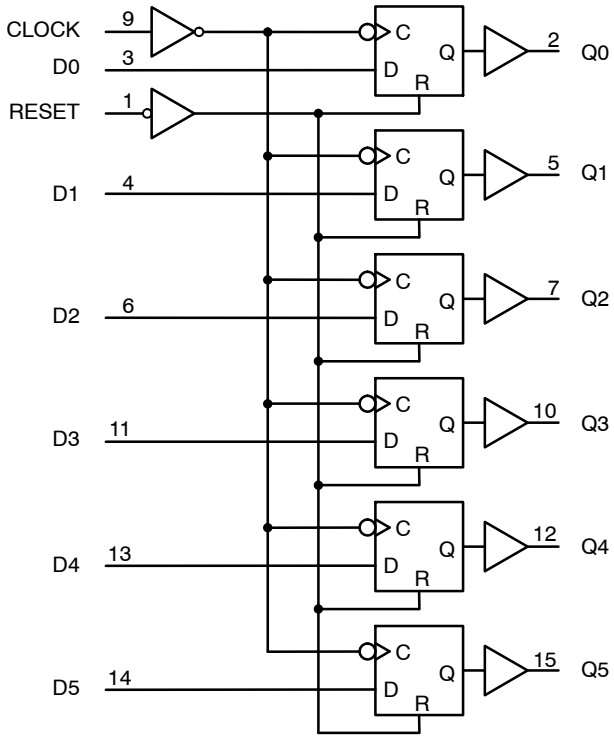

Figure 6. Expanded Logic Diagram

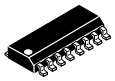

SCALE 1:1

SOIC–16
CASE 751B–05
ISSUE K

DATE 29 DEC 2006

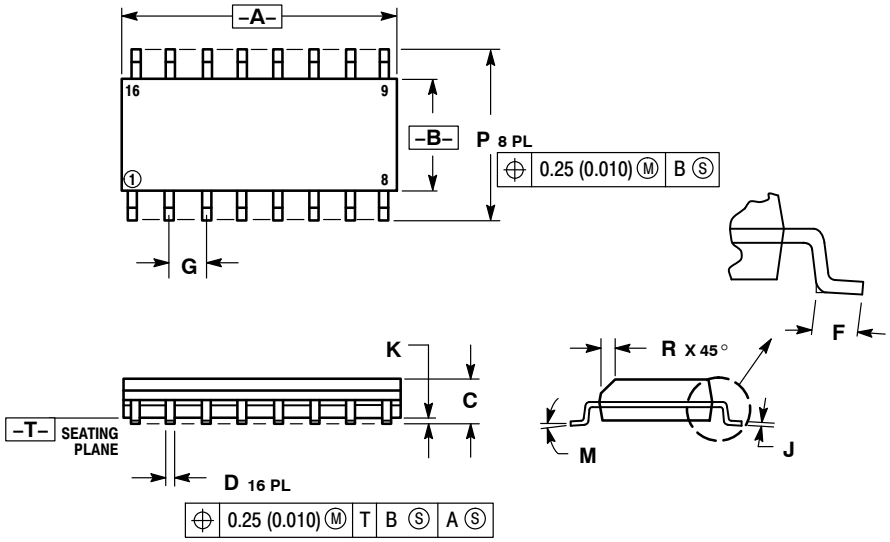

NOTES:
1. DIMENSIONING AND TOLERANCING PER ANSI Y14.5M, 1982.
2. CONTROLLING DIMENSION: MILLIMETER.
3. DIMENSIONS A AND B DO NOT INCLUDE MOLD PROTRUSION.
4. MAXIMUM MOLD PROTRUSION 0.15 (0.006) PER SIDE.
5. DIMENSION D DOES NOT INCLUDE DAMBAR PROTRUSION. ALLOWABLE DAMBAR PROTRUSION SHALL BE 0.127 (0.005) TOTAL IN EXCESS OF THE D DIMENSION AT MAXIMUM MATERIAL CONDITION.

	MILLIMETERS		INCHES	
DIM	MIN	MAX	MIN	MAX
A	9.80	10.00	0.386	0.393
B	3.80	4.00	0.150	0.157
C	1.35	1.75	0.054	0.068
D	0.35	0.49	0.014	0.019
F	0.40	1.25	0.016	0.049
G	1.27 BSC		0.050 BSC	
J	0.19	0.25	0.008	0.009
K	0.10	0.25	0.004	0.009
M	0°	7°	0°	7°
P	5.80	6.20	0.229	0.244
R	0.25	0.50	0.010	0.019

STYLE 1:
PIN 1. COLLECTOR
2. BASE
3. EMITTER
4. NO CONNECTION
5. EMITTER
6. BASE
7. COLLECTOR
8. COLLECTOR
9. BASE
10. EMITTER
11. NO CONNECTION
12. EMITTER
13. BASE
14. COLLECTOR
15. EMITTER
16. COLLECTOR

STYLE 2:
PIN 1. CATHODE
2. ANODE
3. NO CONNECTION
4. CATHODE
5. CATHODE
6. NO CONNECTION
7. ANODE
8. CATHODE
9. CATHODE
10. ANODE
11. NO CONNECTION
12. CATHODE
13. CATHODE
14. NO CONNECTION
15. ANODE
16. CATHODE

STYLE 3:
PIN 1. COLLECTOR, DYE #1
2. BASE, #1
3. EMITTER, #1
4. COLLECTOR, #1
5. COLLECTOR, #2
6. BASE, #2
7. EMITTER, #2
8. COLLECTOR, #2
9. COLLECTOR, #3
10. BASE, #3
11. EMITTER, #3
12. COLLECTOR, #3
13. COLLECTOR, #4
14. BASE, #4
15. EMITTER, #4
16. COLLECTOR, #4

STYLE 4:
PIN 1. COLLECTOR, DYE #1
2. COLLECTOR, #1
3. COLLECTOR, #2
4. COLLECTOR, #2
5. COLLECTOR, #3
6. COLLECTOR, #3
7. COLLECTOR, #4
8. COLLECTOR, #4
9. BASE, #4
10. EMITTER, #4
11. BASE, #3
12. EMITTER, #3
13. BASE, #2
14. EMITTER, #2
15. BASE, #1
16. EMITTER, #1

STYLE 5:
PIN 1. DRAIN, DYE #1
2. DRAIN, #1
3. DRAIN, #2
4. DRAIN, #2
5. DRAIN, #3
6. DRAIN, #3
7. DRAIN, #4
8. DRAIN, #4
9. GATE, #4
10. SOURCE, #4
11. GATE, #3
12. SOURCE, #3
13. GATE, #2
14. SOURCE, #2
15. GATE, #1
16. SOURCE, #1

STYLE 6:
PIN 1. CATHODE
2. CATHODE
3. CATHODE
4. CATHODE
5. CATHODE
6. CATHODE
7. CATHODE
8. CATHODE
9. ANODE
10. ANODE
11. ANODE
12. ANODE
13. ANODE
14. ANODE
15. ANODE
16. ANODE

STYLE 7:
PIN 1. SOURCE N-CH
2. COMMON DRAIN (OUTPUT)
3. COMMON DRAIN (OUTPUT)
4. GATE P-CH
5. COMMON DRAIN (OUTPUT)
6. COMMON DRAIN (OUTPUT)
7. COMMON DRAIN (OUTPUT)
8. SOURCE P-CH
9. SOURCE P-CH
10. COMMON DRAIN (OUTPUT)
11. COMMON DRAIN (OUTPUT)
12. COMMON DRAIN (OUTPUT)
13. GATE N-CH
14. COMMON DRAIN (OUTPUT)
15. COMMON DRAIN (OUTPUT)
16. SOURCE N-CH

SOLDERING FOOTPRINT

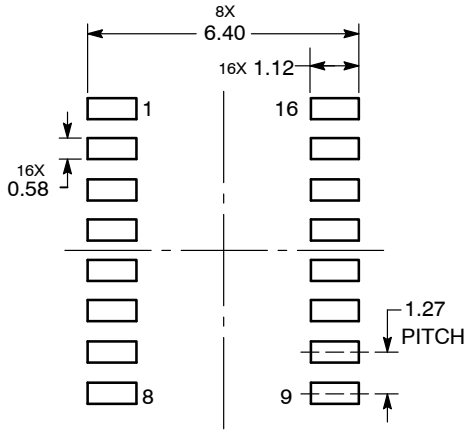

DIMENSIONS: MILLIMETERS

DOCUMENT NUMBER:	98ASB42566B	Electronic versions are uncontrolled except when accessed directly from the Document Repository. Printed versions are uncontrolled except when stamped "CONTROLLED COPY" in red.
DESCRIPTION:	SOIC–16	PAGE 1 OF 1

ON Semiconductor and ON are trademarks of Semiconductor Components Industries, LLC dba ON Semiconductor or its subsidiaries in the United States and/or other countries. ON Semiconductor reserves the right to make changes without further notice to any products herein. ON Semiconductor makes no warranty, representation or guarantee regarding the suitability of its products for any particular purpose, nor does ON Semiconductor assume any liability arising out of the application or use of any product or circuit, and specifically disclaims any and all liability, including without limitation special, consequential or incidental damages. ON Semiconductor does not convey any license under its patent rights nor the rights of others.

© Semiconductor Components Industries, LLC, 2019

MECHANICAL CASE OUTLINE
PACKAGE DIMENSIONS

ON Semiconductor®

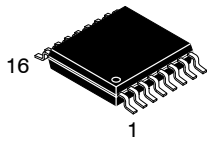

SCALE 2:1

TSSOP−16
CASE 948F−01
ISSUE B

DATE 19 OCT 2006

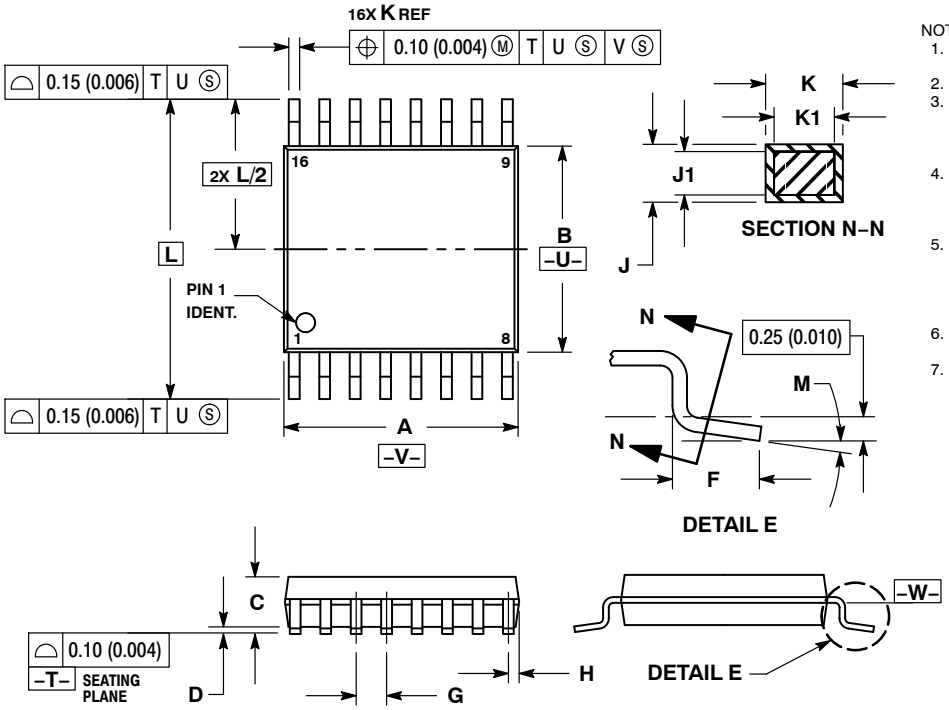

NOTES:
1. DIMENSIONING AND TOLERANCING PER ANSI Y14.5M, 1982.
2. CONTROLLING DIMENSION: MILLIMETER.
3. DIMENSION A DOES NOT INCLUDE MOLD FLASH. PROTRUSIONS OR GATE BURRS. MOLD FLASH OR GATE BURRS SHALL NOT EXCEED 0.15 (0.006) PER SIDE.
4. DIMENSION B DOES NOT INCLUDE INTERLEAD FLASH OR PROTRUSION. INTERLEAD FLASH OR PROTRUSION SHALL NOT EXCEED 0.25 (0.010) PER SIDE.
5. DIMENSION K DOES NOT INCLUDE DAMBAR PROTRUSION. ALLOWABLE DAMBAR PROTRUSION SHALL BE 0.08 (0.003) TOTAL IN EXCESS OF THE K DIMENSION AT MAXIMUM MATERIAL CONDITION.
6. TERMINAL NUMBERS ARE SHOWN FOR REFERENCE ONLY.
7. DIMENSION A AND B ARE TO BE DETERMINED AT DATUM PLANE −W−.

	MILLIMETERS		INCHES	
DIM	MIN	MAX	MIN	MAX
A	4.90	5.10	0.193	0.200
B	4.30	4.50	0.169	0.177
C	−−−	1.20	−−−	0.047
D	0.05	0.15	0.002	0.006
F	0.50	0.75	0.020	0.030
G	0.65 BSC		0.026 BSC	
H	0.18	0.28	0.007	0.011
J	0.09	0.20	0.004	0.008
J1	0.09	0.16	0.004	0.006
K	0.19	0.30	0.007	0.012
K1	0.19	0.25	0.007	0.010
L	6.40 BSC		0.252 BSC	
M	0 °	8 °	0 °	8 °

SOLDERING FOOTPRINT

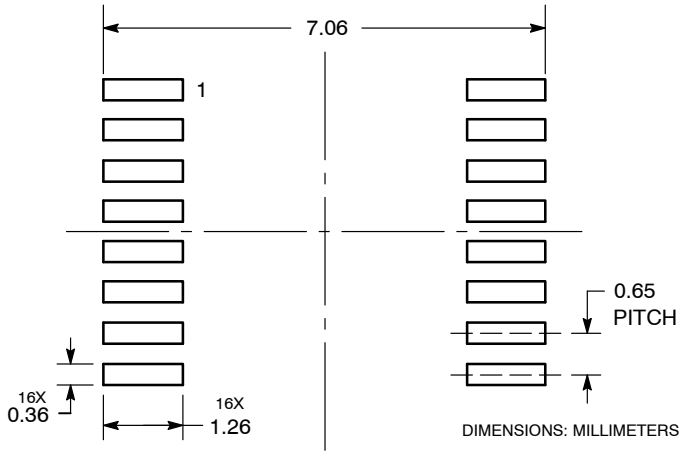

DIMENSIONS: MILLIMETERS

GENERIC MARKING DIAGRAM*

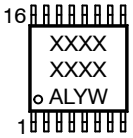

XXXX	= Specific Device Code
A	= Assembly Location
L	= Wafer Lot
Y	= Year
W	= Work Week
G or ▪	= Pb−Free Package

*This information is generic. Please refer to device data sheet for actual part marking. Pb−Free indicator, “G” or microdot “ ▪”, may or may not be present.

DOCUMENT NUMBER:	98ASH70247A	Electronic versions are uncontrolled except when accessed directly from the Document Repository. Printed versions are uncontrolled except when stamped “CONTROLLED COPY” in red.
DESCRIPTION:	TSSOP−16	PAGE 1 OF 1

ON Semiconductor and ON are trademarks of Semiconductor Components Industries, LLC dba ON Semiconductor or its subsidiaries in the United States and/or other countries. ON Semiconductor reserves the right to make changes without further notice to any products herein. ON Semiconductor makes no warranty, representation or guarantee regarding the suitability of its products for any particular purpose, nor does ON Semiconductor assume any liability arising out of the application or use of any product or circuit, and specifically disclaims any and all liability, including without limitation special, consequential or incidental damages. ON Semiconductor does not convey any license under its patent rights nor the rights of others.

© Semiconductor Components Industries, LLC, 2019

onsemi, ONSEMI , and other names, marks, and brands are registered and/or common law trademarks of Semiconductor Components Industries, LLC dba "**onsemi**" or its affiliates and/or subsidiaries in the United States and/or other countries. **onsemi** owns the rights to a number of patents, trademarks, copyrights, trade secrets, and other intellectual property. A listing of **onsemi**'s product/patent coverage may be accessed at www.onsemi.com/site/pdf/Patent−Marking.pdf. **onsemi** reserves the right to make changes at any time to any products or information herein, without notice. The information herein is provided "as−is" and **onsemi** makes no warranty, representation or guarantee regarding the accuracy of the information, product features, availability, functionality, or suitability of its products for any particular purpose, nor does **onsemi** assume any liability arising out of the application or use of any product or circuit, and specifically disclaims any and all liability, including without limitation special, consequential or incidental damages. Buyer is responsible for its products and applications using **onsemi** products, including compliance with all laws, regulations and safety requirements or standards, regardless of any support or applications information provided by **onsemi**. "Typical" parameters which may be provided in **onsemi** data sheets and/or specifications can and do vary in different applications and actual performance may vary over time. All operating parameters, including "Typicals" must be validated for each customer application by customer's technical experts. **onsemi** does not convey any license under any of its intellectual property rights nor the rights of others. **onsemi** products are not designed, intended, or authorized for use as a critical component in life support systems or any FDA Class 3 medical devices or medical devices with a same or similar classification in a foreign jurisdiction or any devices intended for implantation in the human body. Should Buyer purchase or use **onsemi** products for any such unintended or unauthorized application, Buyer shall indemnify and hold **onsemi** and its officers, employees, subsidiaries, affiliates, and distributors harmless against all claims, costs, damages, and expenses, and reasonable attorney fees arising out of, directly or indirectly, any claim of personal injury or death associated with such unintended or unauthorized use, even if such claim alleges that **onsemi** was negligent regarding the design or manufacture of the part. **onsemi** is an Equal Opportunity/Affirmative Action Employer. This literature is subject to all applicable copyright laws and is not for resale in any manner.

PUBLICATION ORDERING INFORMATION

LITERATURE FULFILLMENT:
Email Requests to: orderlit@onsemi.com

onsemi Website: www.onsemi.com

TECHNICAL SUPPORT
North American Technical Support:
Voice Mail: 1 800−282−9855 Toll Free USA/Canada
Phone: 011 421 33 790 2910

Europe, Middle East and Africa Technical Support:
Phone: 00421 33 790 2910
For additional information, please contact your local Sales Representative

◊