MC14543B

BCD-to-Seven Segment Latch/Decoder/Driver for Liquid Crystals

The MC14543B BCD−to−seven segment latch/decoder/driver is designed for use with liquid crystal readouts, and is constructed with complementary MOS (CMOS) enhancement mode devices. The circuit provides the functions of a 4−bit storage latch and an 8421 BCD−to−seven segment decoder and driver. The device has the capability to invert the logic levels of the output combination. The phase (Ph), blanking (BI), and latch disable (LD) inputs are used to reverse the truth table phase, blank the display, and store a BCD code, respectively. For liquid crystal (LC) readouts, a square wave is applied to the Ph input of the circuit and the electrically common backplane of the display. The outputs of the circuit are connected directly to the segments of the LC readout. For other types of readouts, such as light−emitting diode (LED), incandescent, gas discharge, and fluorescent readouts, connection diagrams are given on this data sheet.

Applications include instrument (e.g., counter, DVM etc.) display driver, computer/calculator display driver, cockpit display driver, and various clock, watch, and timer uses.

Features

- Latch Storage of Code
- Blanking Input
- Readout Blanking on All Illegal Input Combinations
- Direct LED (Common Anode or Cathode) Driving Capability
- Supply Voltage Range = 3.0 V to 18 V
- Capable of Driving 2 Low−power TTL Loads, 1 Low−power Schottky TTL Load or 2 HTL Loads Over the Rated Temperature Range
- Pin−for−Pin Replacement for CD4056A (with Pin 7 Tied to V_{SS}).
- Chip Complexity: 207 FETs or 52 Equivalent Gates
- NLV Prefix for Automotive and Other Applications Requiring Unique Site and Control Change Requirements; AEC−Q100 Qualified and PPAP Capable.
- This Device is Pb−Free and is RoHS Compliant

ON Semiconductor®

http://onsemi.com

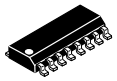

1

SOIC−16
D SUFFIX
CASE 751B

PIN ASSIGNMENT

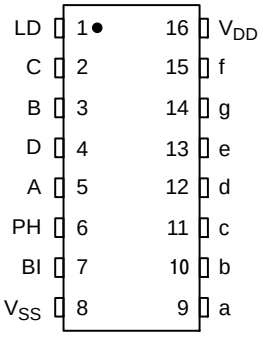

MARKING DIAGRAM



A = Assembly Location
WL, L = Wafer Lot
YY, Y = Year
WW, W = Work Week
G = Pb−Free Package

ORDERING INFORMATION

See detailed ordering and shipping information in the package dimensions section on page 7 of this data sheet.

© Semiconductor Components Industries, LLC, 2014

MAXIMUM RATINGS (Voltages Referenced to V_{SS})

Parameter	Symbol	Value	Unit
DC Supply Voltage Range	V_{DD}	−0.5 to +18.0	V
Input Voltage Range, All Inputs	V_{in}	−0.5 to V_{DD} +0.5	V
DC Input Current per Pin	I_{in}	±10	mA
Power Dissipation per Package (Note 1)	P_D	500	mW
Operating Temperature Range	T_A	−55 to +125	°C
Storage Temperature Range	T_{stg}	−65 to +150	°C
Maximum Continuous Output Drive Current (Source or Sink)	I_{OHmax} I_{OLmax}	10 (per Output)	mA
Maximum Continuous Output Power (Source or Sink) (Note 2)	P_{OHmax} P_{OLmax}	70 (per Output)	mW

Stresses exceeding those listed in the Maximum Ratings table may damage the device. If any of these limits are exceeded, device functionality should not be assumed, damage may occur and reliability may be affected.

1. Temperature Derating: “D/DW” Package: –7.0 mW/°C From 65°C To 125°C
2. $P_{OHmax} = I_{OH} (V_{OH} - V_{DD})$ and $P_{OLmax} = I_{OL} (V_{OL} - V_{SS})$

This device contains protection circuitry to guard against damage due to high static voltages or electric fields. However, precautions must be taken to avoid applications of any voltage higher than maximum rated voltages to this high−impedance circuit. For proper operation, V_{in} and V_{out} should be constrained to the range $V_{SS} \le (V_{in}$ or $V_{out}) \le V_{DD}$.

Unused inputs must always be tied to an appropriate logic voltage level (e.g., either V_{SS} or V_{DD}). Unused outputs must be left open.

TRUTH TABLE

Inputs							Outputs							
LD	**BI**	**Ph***	**D**	**C**	**B**	**A**	**a**	**b**	**c**	**d**	**e**	**f**	**g**	**Display**
X	1	0	X	X	X	X	0	0	0	0	0	0	0	Blank
1	0	0	0	0	0	0	1	1	1	1	1	1	0	0
1	0	0	0	0	0	1	0	1	1	0	0	0	0	1
1	0	0	0	0	1	0	1	1	0	1	1	0	1	2
1	0	0	0	0	1	1	1	1	1	1	0	0	1	3
1	0	0	0	1	0	0	0	1	1	0	0	1	1	4
1	0	0	0	1	0	1	1	0	1	1	0	1	1	5
1	0	0	0	1	1	0	1	0	1	1	1	1	1	6
1	0	0	0	1	1	1	1	1	1	0	0	0	0	7
1	0	0	1	0	0	0	1	1	1	1	1	1	1	8
1	0	0	1	0	0	1	1	1	1	1	0	1	1	9
1	0	0	1	0	1	0	0	0	0	0	0	0	0	Blank
1	0	0	1	0	1	1	0	0	0	0	0	0	0	Blank
1	0	0	1	1	0	0	0	0	0	0	0	0	0	Blank
1	0	0	1	1	0	1	0	0	0	0	0	0	0	Blank
1	0	0	1	1	1	0	0	0	0	0	0	0	0	Blank
1	0	0	1	1	1	1	0	0	0	0	0	0	0	Blank
0	0	0	X	X	X	X	**							**
†	†	†	†				Inverse of Output Combinations Above							Display as above

X = Don’t care

† = Above Combinations

* = For liquid crystal readouts, apply a square wave to Ph
For common cathode LED readouts, select Ph = 0
For common anode LED readouts, select Ph = 1

** = Depends upon the BCD code previously applied when LD = 1

ELECTRICAL CHARACTERISTICS (Voltages Referenced to V_{SS})

Characteristic	Symbol	V_{DD} Vdc	− 55°C Min	− 55°C Max	25°C Min	25°C Typ (Note 3)	25°C Max	125°C Min	125°C Max	Unit
Output Voltage “0” Level V_{in} = V_{DD} or 0	V_{OL}	5.0 10 15	− − −	0.05 0.05 0.05	− − −	0 0 0	0.05 0.05 0.05	− − −	0.05 0.05 0.05	Vdc
“1” Level V_{in} = 0 or V_{DD}	V_{OH}	5.0 10 15	4.95 9.95 14.95	− − −	4.95 9.95 14.95	5.0 10 15	− − −	4.95 9.95 14.95	− − −	Vdc
Input Voltage “0” Level (V_O = 4.5 or 0.5 Vdc) (V_O = 9.0 or 1.0 Vdc) (V_O = 13.5 or 1.5 Vdc)	V_{IL}	5.0 10 15	− − −	1.5 3.0 4.0	− − −	2.25 4.50 6.75	1.5 3.0 4.0	− − −	1.5 3.0 4.0	Vdc
“1” Level (V_O = 0.5 or 4.5 Vdc) (V_O = 1.0 or 9.0 Vdc) (V_O = 1.5 or 13.5 Vdc)	V_{IH}	5.0 10 15	3.5 7.0 11	− − −	3.5 7.0 11	2.75 5.50 8.25	− − −	3.5 7.0 11	− − −	Vdc
Output Drive Current (V_{OH} = 2.5 Vdc) Source (V_{OH} = 4.6 Vdc) (V_{OH} = 0.5 Vdc) (V_{OH} = 9.5 Vdc) (V_{OH} = 13.5 Vdc)	I_{OH}	5.0 5.0 10 10 15	–3.0 –0.64 − –1.6 –4.2	− − − − −	–2.4 –0.51 − –1.3 –3.4	–4.2 –0.88 –10.1 –2.25 –8.8	− − − − −	–1.7 –0.36 − –0.9 –2.4	− − − −	mAdc
(V_{OL} = 0.4 Vdc) Sink (V_{OL} = 0.5 Vdc) (V_{OL} = 9.5 Vdc) (V_{OL} = 1.5 Vdc)	I_{OL}	5.0 10 10 15	0.64 1.6 − 4.2	− − − −	0.51 1.3 − 3.4	0.88 2.25 10.1 8.8	− − − −	0.36 0.9 − 2.4	− − −	mAdc
Input Current	I_{in}	15	−	±0.1	−	±0.00001	±0.1	−	±1.0	μAdc
Input Capacitance	C_{in}	−	−	−	−	5.0	7.5	−	−	pF
Quiescent Current (Per Package) V_{in} = 0 or V_{DD}, I_{out} = 0 μA	I_{DD}	5.0 10 15	− − −	5.0 10 20	− − −	0.005 0.010 0.015	5.0 10 20	− − −	150 300 600	μAdc
Total Supply Current (Note 4, 5) (Dynamic plus Quiescent, Per Package) (C_L = 50 pF on all outputs, all buffers switching)	I_T	5.0 10 15	I_T = (1.6 μA/kHz) f + I_{DD} I_T = (3.1 μA/kHz) f + I_{DD} I_T = (4.7 μA/kHz) f + I_{DD}							μAdc

Product parametric performance is indicated in the Electrical Characteristics for the listed test conditions, unless otherwise noted. Product performance may not be indicated by the Electrical Characteristics if operated under different conditions.

3. Noise immunity specified for worst−case input combination.

   Noise Margin for both “1” and “0” level = 1.0 V min @ V_{DD} = 5.0 V
   2.0 V min @ V_{DD} = 10 V
   2.5 V min @ V_{DD} = 15 V

4. To calculate total supply current at loads other than 50 pF: $I_T(C_L) = I_T(50\ pF) + 3.5 \times 10^{-3} (C_L - 50) V_{DD} f$ where: I_T is in μA (per package), C_L in pF, V_{DD} in V, and f in kHz is input frequency.
5. The formulas given are for the typical characteristics only at 25°C.

SWITCHING CHARACTERISTICS (Note 6) (C_L = 50 pF, T_A = 25°C)

Characteristic	Symbol	V_{DD}	Min	Typ	Max	Unit
Output Rise Time t_{TLH} = (3.0 ns/pF) C_L + 30 ns t_{TLH} = (1.5 ns/pF) C_L + 15 ns t_{TLH} = (1.1 ns/pF) C_L + 10 ns	t_{TLH}	 5.0 10 15	 – – –	 100 50 40	 200 100 80	ns
Output Fall Time t_{THL} = (1.5 ns/pF) C_L + 25 ns t_{THL} = (0.75 ns/pF) C_L + 12.5 ns t_{THL} = (0.55 ns/pF) C_L + 12.5 ns	t_{THL}	 5.0 10 15	 – – –	 100 50 40	 200 100 80	ns
Turn−Off Delay Time t_{PLH} = (1.7 ns/pF) C_L + 520 ns t_{PLH} = (0.66 ns/pF) C_L + 217 ns t_{PLH} = (0.5 ns/pF) C_L + 160 ns	t_{PLH}	 5.0 10 15	 – – –	 605 250 185	 1210 500 370	ns
Turn−On Delay Time t_{PHL} = (1.7 ns/pF) C_L + 420 ns t_{PHL} = (0.66 ns/pF) C_L + 172 ns t_{PHL} = (0.5 ns/pF) C_L + 130 ns	t_{PHL}	 5.0 10 15	 – – –	 505 205 155	 1650 660 495	ns
Setup Time	t_{su}	5.0 10 15	350 450 500		– – –	ns
Hold Time	t_h	5.0 10 15	40 30 20		– – –	ns
Latch Disable Pulse Width (Strobing Data)	t_{WH}	5.0 10 15	250 100 80	125 50 40	– – –	ns

6. The formulas given are for the typical characteristics only.

LOGIC DIAGRAM

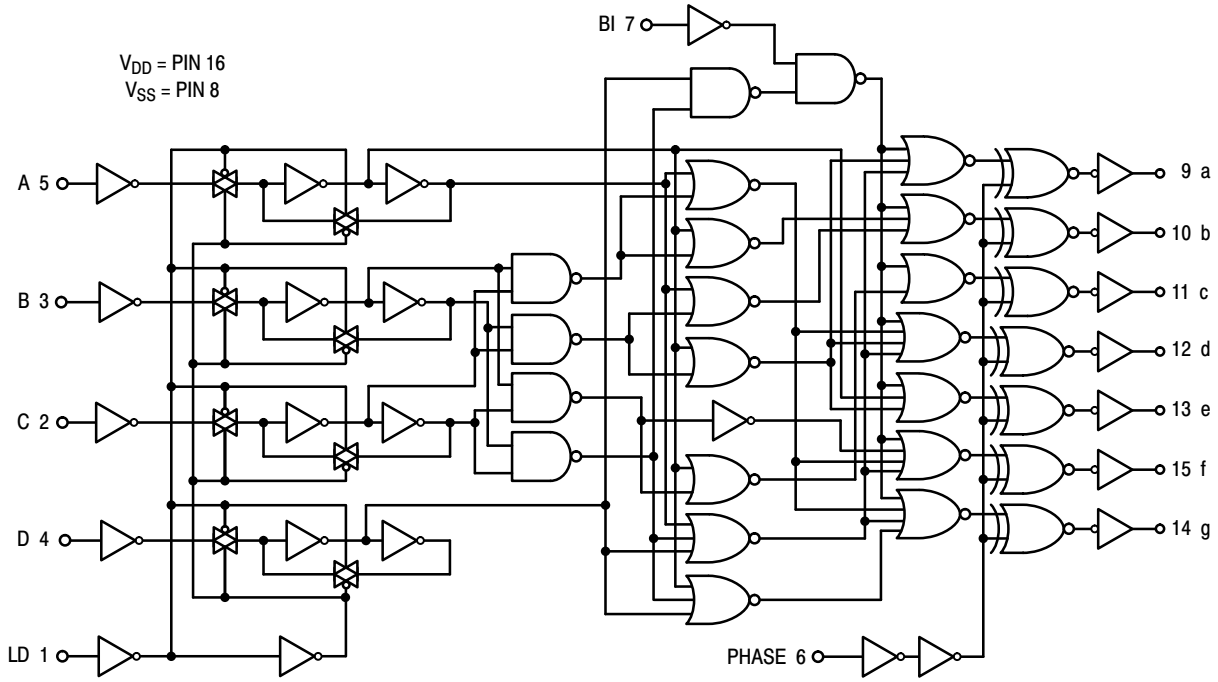

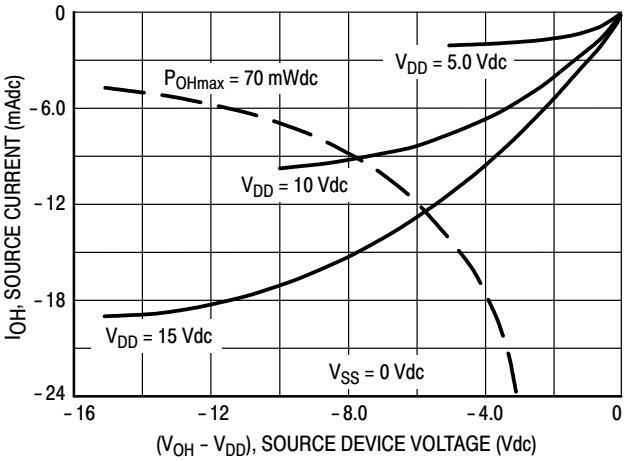

Figure 1. Typical Output Source Characteristics

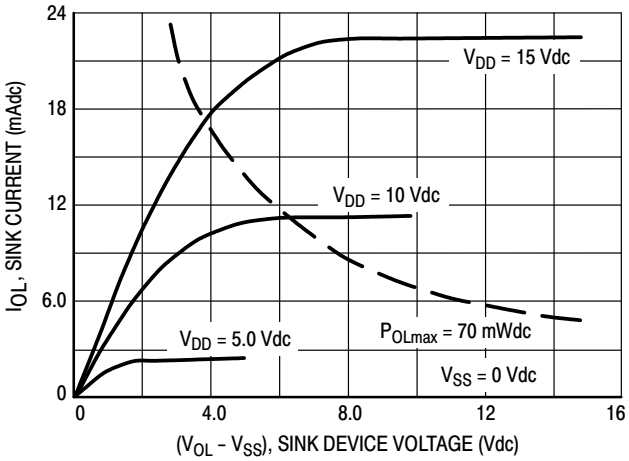

Figure 2. Typical Output Sink Characteristics

Inputs BI and Ph low, and Inputs D and LD high.
f in respect to a system clock.

All outputs connected to respective C_L loads.

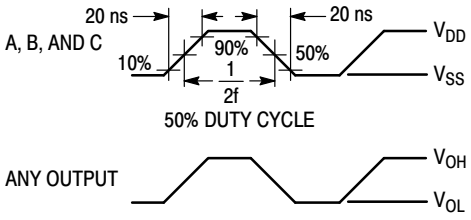

Figure 3. Dynamic Power Dissipation Signal Waveforms

(a) Inputs D, Ph, and BI low, and Inputs A, B, and LD high.

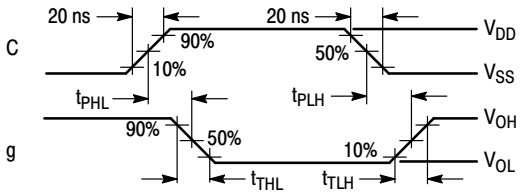

(b) Inputs D, Ph, and BI low, and Inputs A and B high.

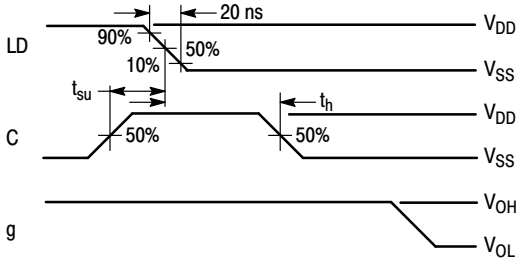

(c) Data DCBA strobed into latches

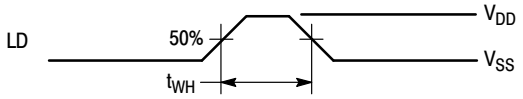

Figure 4. Dynamic Signal Waveforms

CONNECTIONS TO VARIOUS DISPLAY READOUTS

LIQUID CRYSTAL (LC) READOUT

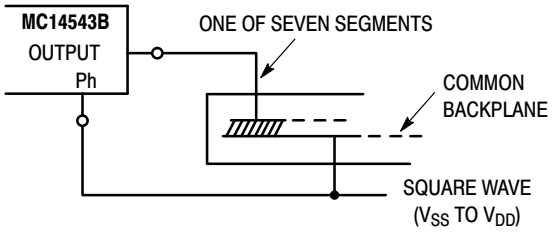

INCANDESCENT READOUT

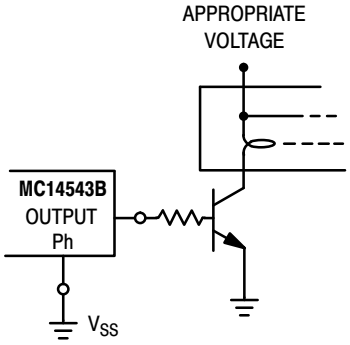

LIGHT EMITTING DIODE (LED) READOUT

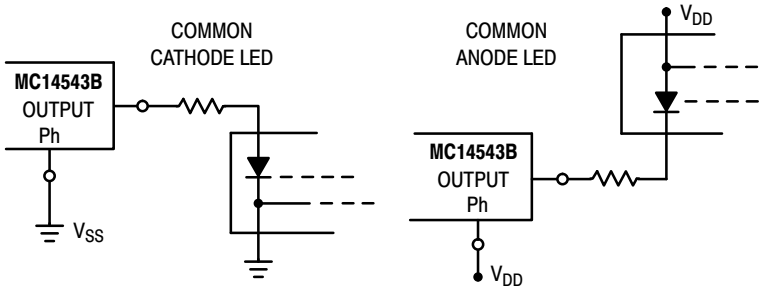

NOTE: Bipolar transistors may be added for gain (for $V_{DD} \leq 10$ V or $I_{out} \geq 10$ mA).

GAS DISCHARGE READOUT

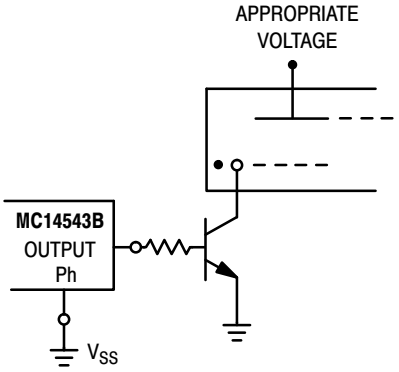

CONNECTIONS TO SEGMENTS

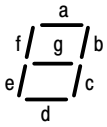

V_{DD} = PIN 16
V_{SS} = PIN 8

DISPLAY

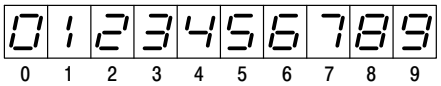

ORDERING INFORMATION

Device	Package	Shipping†
MC14543BDG	SOIC−16 (Pb−Free)	48 Units / Rail
MC14543BDR2G	SOIC−16 (Pb−Free)	2500 / Tape & Reel
NLV14543BDR2G*	SOIC−16 (Pb−Free)	2500 / Tape & Reel

†For information on tape and reel specifications, including part orientation and tape sizes, please refer to our Tape and Reel Packaging Specifications Brochure, BRD8011/D.

*NLV Prefix for Automotive and Other Applications Requiring Unique Site and Control Change Requirements; AEC−Q100 Qualified and PPAP Capable.

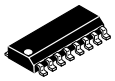

SCALE 1:1

SOIC–16
CASE 751B–05
ISSUE K

DATE 29 DEC 2006

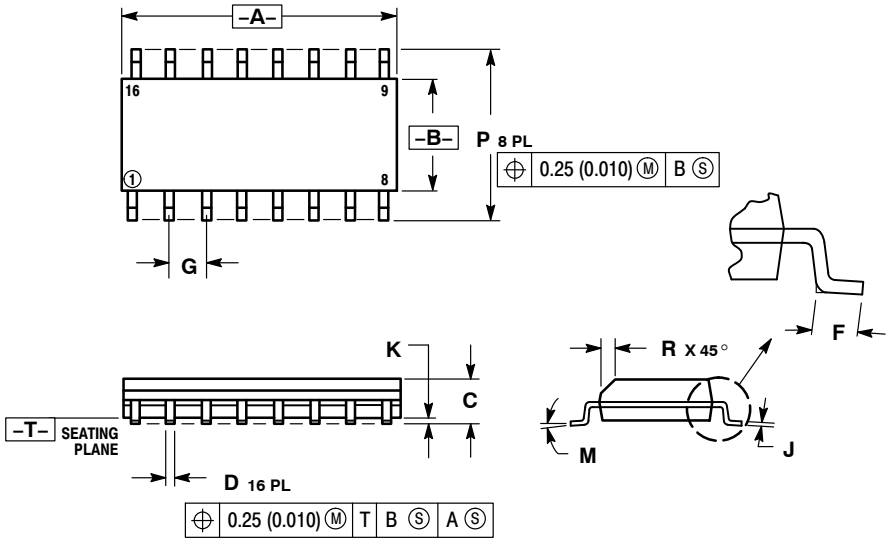

NOTES:
1. DIMENSIONING AND TOLERANCING PER ANSI Y14.5M, 1982.
2. CONTROLLING DIMENSION: MILLIMETER.
3. DIMENSIONS A AND B DO NOT INCLUDE MOLD PROTRUSION.
4. MAXIMUM MOLD PROTRUSION 0.15 (0.006) PER SIDE.
5. DIMENSION D DOES NOT INCLUDE DAMBAR PROTRUSION. ALLOWABLE DAMBAR PROTRUSION SHALL BE 0.127 (0.005) TOTAL IN EXCESS OF THE D DIMENSION AT MAXIMUM MATERIAL CONDITION.

	MILLIMETERS		INCHES	
DIM	MIN	MAX	MIN	MAX
A	9.80	10.00	0.386	0.393
B	3.80	4.00	0.150	0.157
C	1.35	1.75	0.054	0.068
D	0.35	0.49	0.014	0.019
F	0.40	1.25	0.016	0.049
G	1.27 BSC		0.050 BSC	
J	0.19	0.25	0.008	0.009
K	0.10	0.25	0.004	0.009
M	0°	7°	0°	7°
P	5.80	6.20	0.229	0.244
R	0.25	0.50	0.010	0.019

STYLE 1:
PIN 1. COLLECTOR
2. BASE
3. EMITTER
4. NO CONNECTION
5. EMITTER
6. BASE
7. COLLECTOR
8. COLLECTOR
9. BASE
10. EMITTER
11. NO CONNECTION
12. EMITTER
13. BASE
14. COLLECTOR
15. EMITTER
16. COLLECTOR

STYLE 2:
PIN 1. CATHODE
2. ANODE
3. NO CONNECTION
4. CATHODE
5. CATHODE
6. NO CONNECTION
7. ANODE
8. CATHODE
9. CATHODE
10. ANODE
11. NO CONNECTION
12. CATHODE
13. CATHODE
14. NO CONNECTION
15. ANODE
16. CATHODE

STYLE 3:
PIN 1. COLLECTOR, DYE #1
2. BASE, #1
3. EMITTER, #1
4. COLLECTOR, #1
5. COLLECTOR, #2
6. BASE, #2
7. EMITTER, #2
8. COLLECTOR, #2
9. COLLECTOR, #3
10. BASE, #3
11. EMITTER, #3
12. COLLECTOR, #3
13. COLLECTOR, #4
14. BASE, #4
15. EMITTER, #4
16. COLLECTOR, #4

STYLE 4:
PIN 1. COLLECTOR, DYE #1
2. COLLECTOR, #1
3. COLLECTOR, #2
4. COLLECTOR, #2
5. COLLECTOR, #3
6. COLLECTOR, #3
7. COLLECTOR, #4
8. COLLECTOR, #4
9. BASE, #4
10. EMITTER, #4
11. BASE, #3
12. EMITTER, #3
13. BASE, #2
14. EMITTER, #2
15. BASE, #1
16. EMITTER, #1

STYLE 5:
PIN 1. DRAIN, DYE #1
2. DRAIN, #1
3. DRAIN, #2
4. DRAIN, #2
5. DRAIN, #3
6. DRAIN, #3
7. DRAIN, #4
8. DRAIN, #4
9. GATE, #4
10. SOURCE, #4
11. GATE, #3
12. SOURCE, #3
13. GATE, #2
14. SOURCE, #2
15. GATE, #1
16. SOURCE, #1

STYLE 6:
PIN 1. CATHODE
2. CATHODE
3. CATHODE
4. CATHODE
5. CATHODE
6. CATHODE
7. CATHODE
8. CATHODE
9. ANODE
10. ANODE
11. ANODE
12. ANODE
13. ANODE
14. ANODE
15. ANODE
16. ANODE

STYLE 7:
PIN 1. SOURCE N-CH
2. COMMON DRAIN (OUTPUT)
3. COMMON DRAIN (OUTPUT)
4. GATE P-CH
5. COMMON DRAIN (OUTPUT)
6. COMMON DRAIN (OUTPUT)
7. COMMON DRAIN (OUTPUT)
8. SOURCE P-CH
9. SOURCE P-CH
10. COMMON DRAIN (OUTPUT)
11. COMMON DRAIN (OUTPUT)
12. COMMON DRAIN (OUTPUT)
13. GATE N-CH
14. COMMON DRAIN (OUTPUT)
15. COMMON DRAIN (OUTPUT)
16. SOURCE N-CH

SOLDERING FOOTPRINT

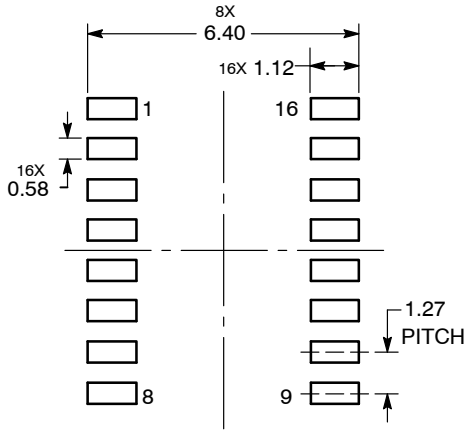

DIMENSIONS: MILLIMETERS

DOCUMENT NUMBER:	98ASB42566B	Electronic versions are uncontrolled except when accessed directly from the Document Repository. Printed versions are uncontrolled except when stamped "CONTROLLED COPY" in red.
DESCRIPTION:	SOIC–16	PAGE 1 OF 1

ON Semiconductor and ON are trademarks of Semiconductor Components Industries, LLC dba ON Semiconductor or its subsidiaries in the United States and/or other countries. ON Semiconductor reserves the right to make changes without further notice to any products herein. ON Semiconductor makes no warranty, representation or guarantee regarding the suitability of its products for any particular purpose, nor does ON Semiconductor assume any liability arising out of the application or use of any product or circuit, and specifically disclaims any and all liability, including without limitation special, consequential or incidental damages. ON Semiconductor does not convey any license under its patent rights nor the rights of others.

© Semiconductor Components Industries, LLC, 2019

onsemi, ONSEMI , and other names, marks, and brands are registered and/or common law trademarks of Semiconductor Components Industries, LLC dba "**onsemi**" or its affiliates and/or subsidiaries in the United States and/or other countries. **onsemi** owns the rights to a number of patents, trademarks, copyrights, trade secrets, and other intellectual property. A listing of **onsemi**'s product/patent coverage may be accessed at www.onsemi.com/site/pdf/Patent−Marking.pdf. **onsemi** reserves the right to make changes at any time to any products or information herein, without notice. The information herein is provided "as−is" and **onsemi** makes no warranty, representation or guarantee regarding the accuracy of the information, product features, availability, functionality, or suitability of its products for any particular purpose, nor does **onsemi** assume any liability arising out of the application or use of any product or circuit, and specifically disclaims any and all liability, including without limitation special, consequential or incidental damages. Buyer is responsible for its products and applications using **onsemi** products, including compliance with all laws, regulations and safety requirements or standards, regardless of any support or applications information provided by **onsemi**. "Typical" parameters which may be provided in **onsemi** data sheets and/or specifications can and do vary in different applications and actual performance may vary over time. All operating parameters, including "Typicals" must be validated for each customer application by customer's technical experts. **onsemi** does not convey any license under any of its intellectual property rights nor the rights of others. **onsemi** products are not designed, intended, or authorized for use as a critical component in life support systems or any FDA Class 3 medical devices or medical devices with a same or similar classification in a foreign jurisdiction or any devices intended for implantation in the human body. Should Buyer purchase or use **onsemi** products for any such unintended or unauthorized application, Buyer shall indemnify and hold **onsemi** and its officers, employees, subsidiaries, affiliates, and distributors harmless against all claims, costs, damages, and expenses, and reasonable attorney fees arising out of, directly or indirectly, any claim of personal injury or death associated with such unintended or unauthorized use, even if such claim alleges that **onsemi** was negligent regarding the design or manufacture of the part. **onsemi** is an Equal Opportunity/Affirmative Action Employer. This literature is subject to all applicable copyright laws and is not for resale in any manner.

PUBLICATION ORDERING INFORMATION

LITERATURE FULFILLMENT:
Email Requests to: orderlit@onsemi.com

onsemi Website: www.onsemi.com

TECHNICAL SUPPORT
North American Technical Support:
Voice Mail: 1 800−282−9855 Toll Free USA/Canada
Phone: 011 421 33 790 2910

Europe, Middle East and Africa Technical Support:
Phone: 00421 33 790 2910
For additional information, please contact your local Sales Representative

◊