MC14015B

Dual 4-Bit Static Shift Register

The MC14015B dual 4−bit static shift register is constructed with MOS P−Channel and N−Channel enhancement mode devices in a single monolithic structure. It consists of two identical, independent 4−state serial−input/parallel−output registers. Each register has independent Clock and Reset inputs with a single serial Data input. The register states are type D master−slave flip−flops. Data is shifted from one stage to the next during the positive−going clock transition. Each register can be cleared when a high level is applied on the Reset line. These complementary MOS shift registers find primary use in buffer storage and serial−to−parallel conversion where low power dissipation and/or noise immunity is desired.

Features

- Diode Protection on All Inputs
- Supply Voltage Range = 3.0 Vdc to 18 Vdc
- Logic Edge−Clocked Flip−Flop Design
- Logic State is Retained Indefinitely with Clock Level either High or Low; Information is Transferred to the Output only on the Positive-going Edge of the Clock Pulse
- Capable of Driving Two Low−power TTL Loads or One Low−power Schottky TTL Load Over the Rated Temperature Range
- NLV Prefix for Automotive and Other Applications Requiring Unique Site and Control Change Requirements; AEC−Q100 Qualified and PPAP Capable
- This Device is Pb−Free and is RoHS Compliant

ON Semiconductor®

http://onsemi.com

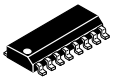

SOIC−16
D SUFFIX
CASE 751B

MARKING DIAGRAM

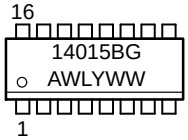

A	= Assembly Location
WL, L	= Wafer Lot
YY, Y	= Year
WW, W	= Work Week
G	= Pb−Free Indicator

ORDERING INFORMATION

See detailed ordering and shipping information in the package dimensions section on page 2 of this data sheet.

MAXIMUM RATINGS (Voltages Referenced to V_{SS})

Symbol	Parameter	Value	Unit
V_{DD}	DC Supply Voltage Range	−0.5 to +18.0	V
V_{in}, V_{out}	Input or Output Voltage Range (DC or Transient)	−0.5 to V_{DD} + 0.5	V
I_{in}, I_{out}	Input or Output Current (DC or Transient) per Pin	±10	mA
P_D	Power Dissipation, per Package (Note 1)	500	mW
T_A	Ambient Temperature Range	−55 to +125	°C
T_{stg}	Storage Temperature Range	−65 to +150	°C
T_L	Lead Temperature (8−Second Soldering)	260	°C

Stresses exceeding those listed in the Maximum Ratings table may damage the device. If any of these limits are exceeded, device functionality should not be assumed, damage may occur and reliability may be affected.

1. Temperature Derating: “D/DW” Package: –7.0 mW/°C From 65°C To 125°C

This device contains protection circuitry to guard against damage due to high static voltages or electric fields. However, precautions must be taken to avoid applications of any voltage higher than maximum rated voltages to this high−impedance circuit. For proper operation, V_{in} and V_{out} should be constrained to the range $V_{SS} \le (V_{in}$ or $V_{out}) \le V_{DD}$.

Unused inputs must always be tied to an appropriate logic voltage level (e.g., either V_{SS} or V_{DD}). Unused outputs must be left open.

© Semiconductor Components Industries, LLC, 2014

PIN ASSIGNMENT

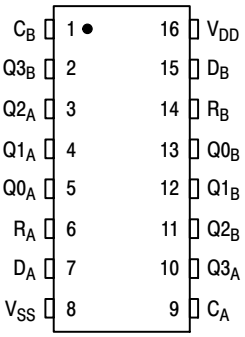

BLOCK DIAGRAM

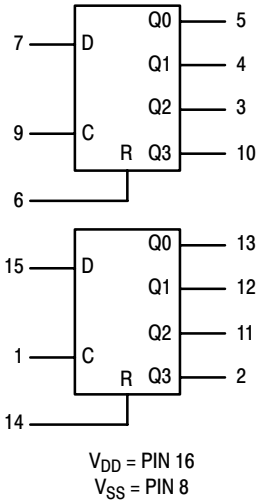

V_{DD} = PIN 16
V_{SS} = PIN 8

TRUTH TABLE

C	D	R	Q0	Q_n
↗	0	0	0	Q_{n-1}
↗	1	0	1	Q_{n-1}
↘	X	0	No Change	No Change
X	X	1	0	0

X = Don't Care
Q_n = Q0, Q1, Q2, or Q3, as applicable.
Q_{n-1} = Output of prior stage.

ORDERING INFORMATION

Device	Package	Shipping†
MC14015BDG	SOIC−16 (Pb−Free)	48 Units / Rail
MC14015BDR2G	SOIC−16 (Pb−Free)	2500 Units / Tape & Reel
NLV14015BDR2G*	SOIC−16 (Pb−Free)	2500 Units / Tape & Reel

†For information on tape and reel specifications, including part orientation and tape sizes, please refer to our Tape and Reel Packaging Specifications Brochure, BRD8011/D.
*NLV Prefix for Automotive and Other Applications Requiring Unique Site and Control Change Requirements; AEC−Q100 Qualified and PPAP Capable.

ELECTRICAL CHARACTERISTICS (Voltages Referenced to V_{SS})

Characteristic	Symbol	V_{DD} Vdc	−55°C Min	−55°C Max	25°C Min	25°C Typ (Note 2)	25°C Max	125°C Min	125°C Max	Unit
Output Voltage “0” Level	V_{OL}	5.0	−	0.05	−	0	0.05	−	0.05	Vdc
V_{in} = V_{DD} or 0		10	−	0.05	−	0	0.05	−	0.05	
		15	−	0.05	−	0	0.05	−	0.05	
V_{in} = 0 or V_{DD} “1” Level	V_{OH}	5.0	4.95	−	4.95	5.0	−	4.95	−	Vdc
		10	9.95	−	9.95	10	−	9.95	−	
		15	14.95	−	14.95	15	−	14.95	−	
Input Voltage “0” Level	V_{IL}									Vdc
(V_O = 4.5 or .05 Vdc)		5.0	−	1.5	−	2.25	1.5	−	1.5	
(V_O = 9.0 or 1.0 Vdc)		10	−	3.0	−	4.50	3.0	−	3.0	
(V_O = 13.5 or 1.5 Vdc)		15	−	4.0	−	6.75	4.0	−	4.0	
(V_O = 0.5 or 4.5 Vdc) “1” Level	V_{IH}	5.0	3.5	−	3.5	2.75	−	3.5	−	Vdc
(V_O = 1.0 or 9.0 Vdc)		10	7.0	−	7.0	5.50	−	7.0	−	
(V_O = 1.5 or 13.5 Vdc)		15	11	−	11	8.25	−	11	−	
Output Drive Current	I_{OH}									mAdc
(V_{OH} = 2.5 Vdc) Source		5.0	–3.0	−	–2.4	–4.2	−	–1.7	−	
(V_{OH} = 4.6 Vdc)		5.0	–0.64	−	–0.51	–0.88	−	−0.36	−	
(V_{OH} = 9.5 Vdc)		10	–1.6	−	−1.3	–2.25	−	–0.9	−	
(V_{OH} = 13.5 Vdc)		15	–4.2	−	−3.4	–8.8	−	−2.4	−	
(V_{OL} = 0.4 Vdc) Sink	I_{OL}	5.0	0.64	−	0.51	0.88	−	0.36	−	mAdc
(V_{OL} = 0.5 Vdc)		10	1.6	−	1.3	2.25	−	0.9	−	
(V_{OL} = 1.5 Vdc)		15	4.2	−	3.4	8.8	−	2.4	−	
Input Current	I_{in}	15	−	±0.1	−	±0.00001	±0.1	−	±1.0	μAdc
Input Capacitance (V_{in} = 0)	C_{in}	−	−	−	−	5.0	7.5	−	−	pF
Quiescent Current (Per Package)	I_{DD}	5.0	−	5.0	−	0.005	5.0	−	150	μAdc
		10	−	10	−	0.010	10	−	300	
		15	−	20	−	0.015	20	−	600	
Total Supply Current (Notes 3 & 4) (Dynamic plus Quiescent, Per Package) (C_L = 50 pF on all outputs, all buffers switching)	I_T	5.0	I_T = (1.2 μA/kHz)f + I_{DD}							μAdc
		10	I_T = (2.4 μA/kHz)f + I_{DD}							
		15	I_T = (3.6 μA/kHz)f + I_{DD}							

Product parametric performance is indicated in the Electrical Characteristics for the listed test conditions, unless otherwise noted. Product performance may not be indicated by the Electrical Characteristics if operated under different conditions.

2. Data labelled “Typ” is not to be used for design purposes but is intended as an indication of the IC’s potential performance.
3. The formulas given are for the typical characteristics only at 25°C.
4. To calculate total supply current at loads other than 50 pF:

$$I_T(C_L) = I_T(50\ pF) + (C_L - 50)\ Vfk$$

where: I_T is in μA (per package), C_L in pF, V = (V_{DD} − V_{SS}) in volts, f in kHz is input frequency, and k = 0.002.

SWITCHING CHARACTERISTICS (Note 5) (C_L = 50 pF, T_A = 25°C)

Characteristic	Symbol	V_{DD}	Min	Typ (Note 6)	Max	Unit
Output Rise and Fall Time	t_{TLH},					ns
t_{TLH}, t_{THL} = (1.5 ns/pF) C_L + 25 ns	t_{THL}	5.0	−	100	200	
t_{TLH}, t_{THL} = (0.75 ns/pF) C_L + 12.5 ns		10	−	50	100	
t_{TLH}, t_{THL} = (0.55 ns/pF) C_L + 9.5 ns		15	−	40	80	
Propagation Delay Time	t_{PLH},					ns
Clock, Data to Q	t_{PHL}					
t_{PLH}, t_{PHL} = (1.7 ns/pF) C_L + 225 ns		5.0	−	310	750	
t_{PLH}, t_{PHL} = (0.66 ns/pF) C_L + 92 ns		10	−	125	250	
t_{PLH}, t_{PHL} = (0.5 ns/pF) C_L + 65 ns		15	−	90	170	
Reset to Q						
t_{PLH}, t_{PHL} = (1.7 ns/pF) C_L + 375 ns		5.0	−	460	750	
t_{PLH}, t_{PHL} = (0.66 ns/pF) C_L + 147 ns		10	−	180	250	
t_{PLH}, t_{PHL} = (0.5 ns/pF) C_L + 95 ns		15	−	120	170	
Clock Pulse Width	t_{WH}	5.0	400	185	−	ns
		10	175	85	−	
		15	135	55	−	
Clock Pulse Frequency	f_{cl}	5.0	−	2.0	1.5	MHz
		10	−	6.0	3.0	
		15	−	7.5	3.75	
Clock Pulse Rise and Fall Times	t_{TLH}, t_{THL}	5.0	−	−	15	μs
		10	−	−	5	
		15	−	−	4	
Reset Pulse Width	t_{WH}	5.0	400	200	−	ns
		10	160	80	−	
		15	120	60	−	
Setup Time	t_{su}	5.0	350	100	−	ns
		10	100	50	−	
		15	75	40	−	

5. The formulas given are for typical characteristics only at 25°C.
6. Data labelled “Typ” is not to be used for design purposes but is intended as an indication of the IC’s potential performance.

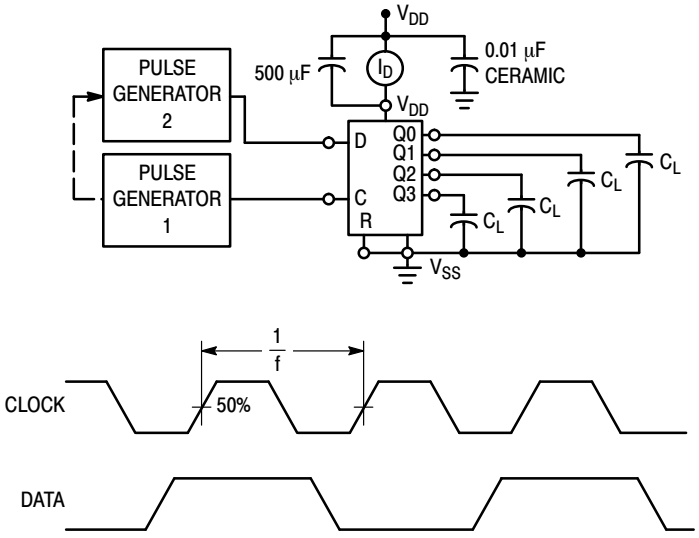

Figure 1. Power Dissipation Test Circuit and Waveform

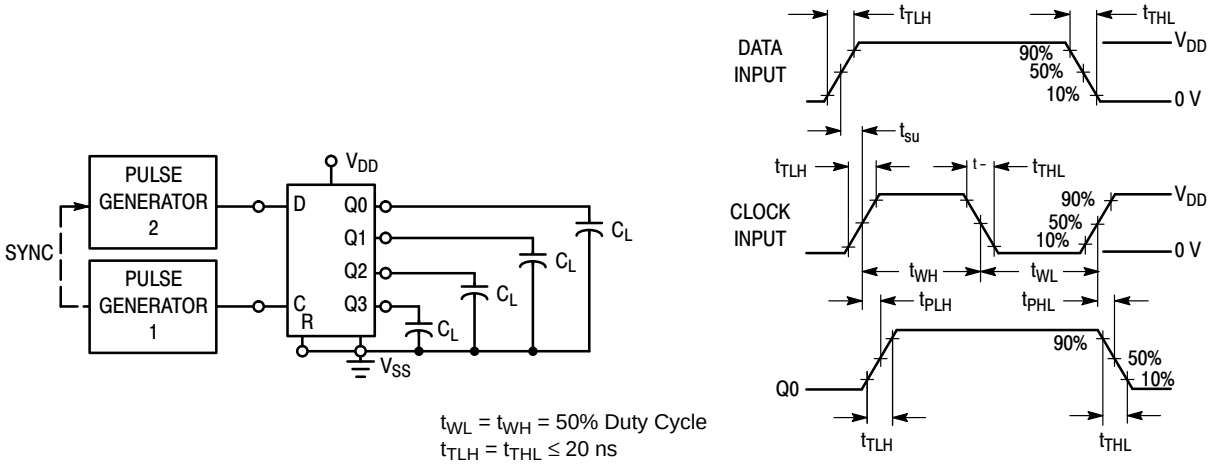

Figure 2. Switching Test Circuit and Waveforms

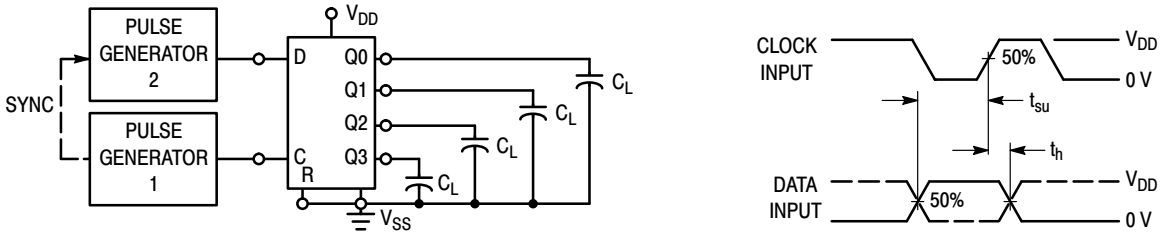

Figure 3. Setup and Hold Time Test Circuit and Waveforms

CIRCUIT SCHEMATICS

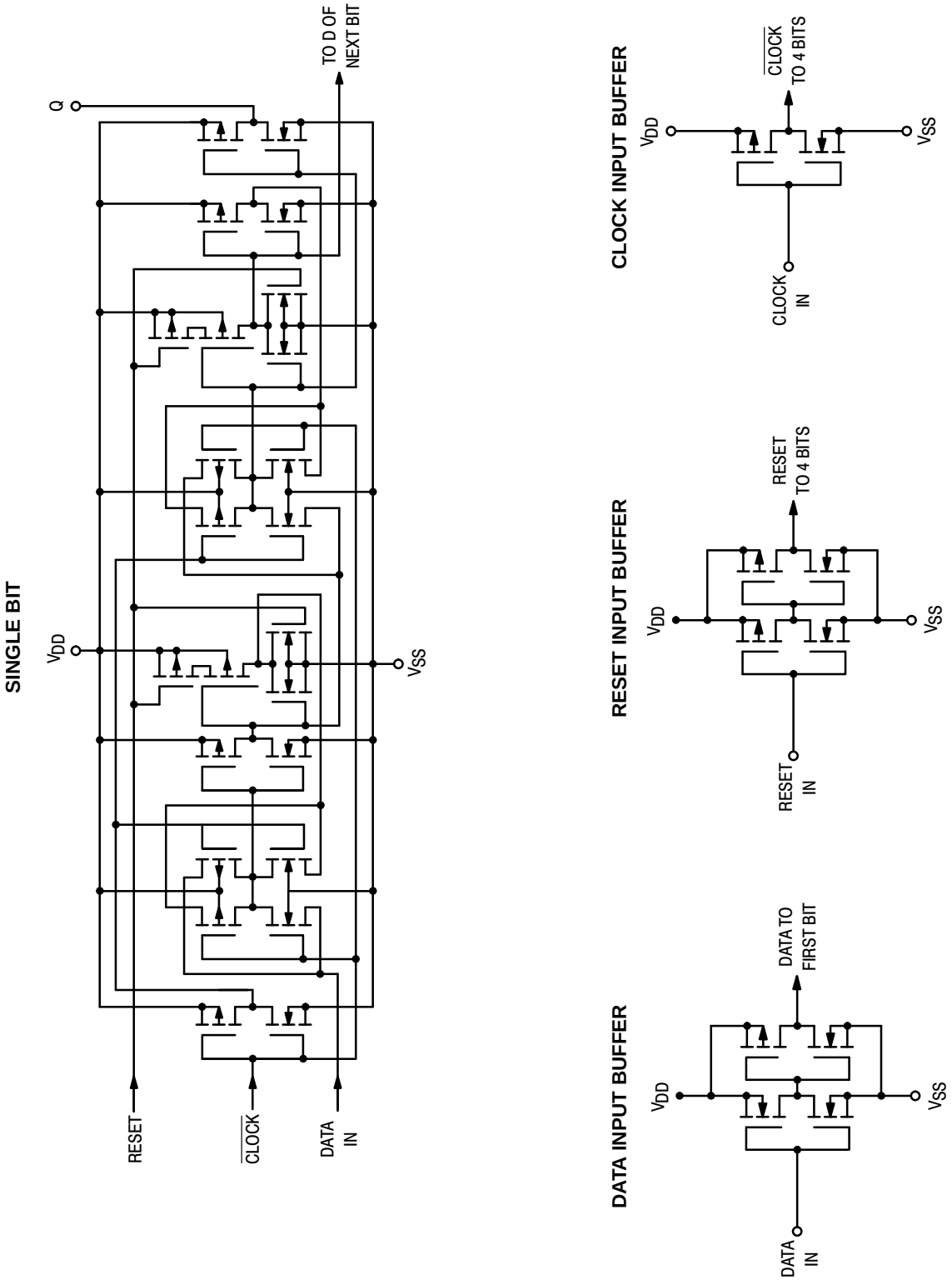

LOGIC DIAGRAMS

SINGLE BIT

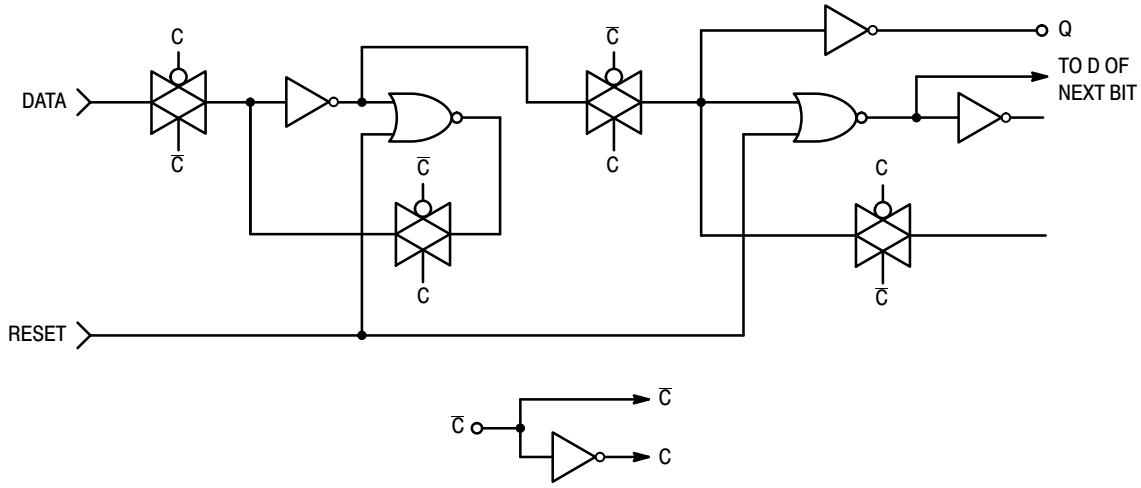

COMPLETE DEVICE

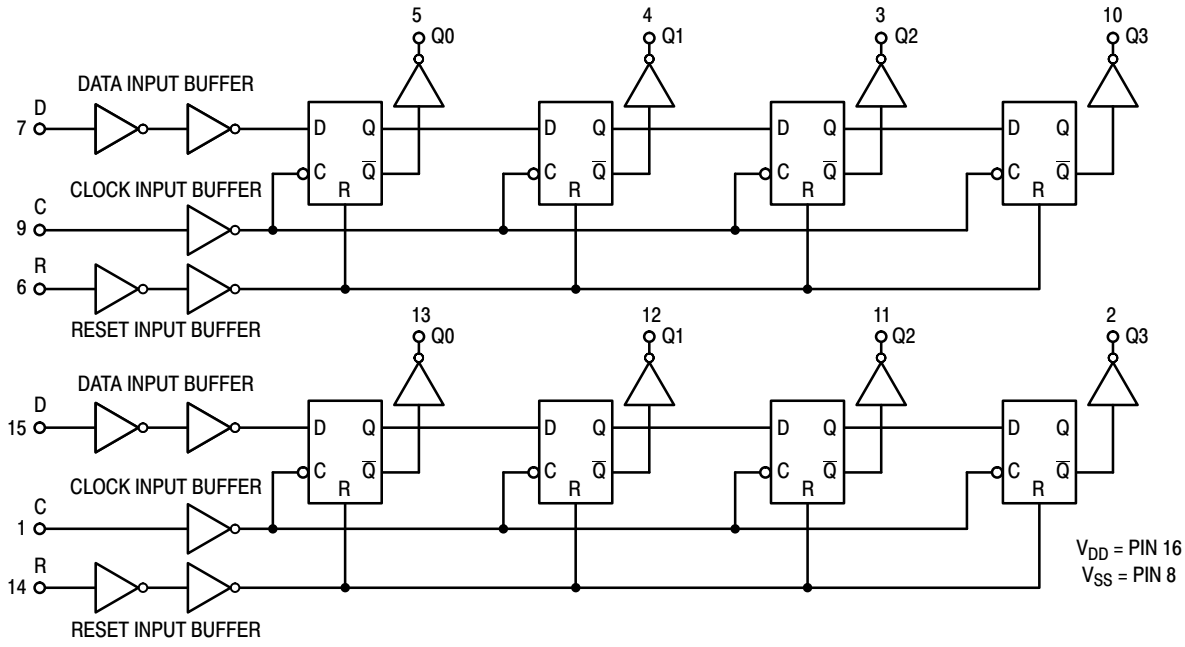

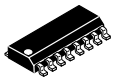

SCALE 1:1

SOIC–16
CASE 751B–05
ISSUE K

DATE 29 DEC 2006

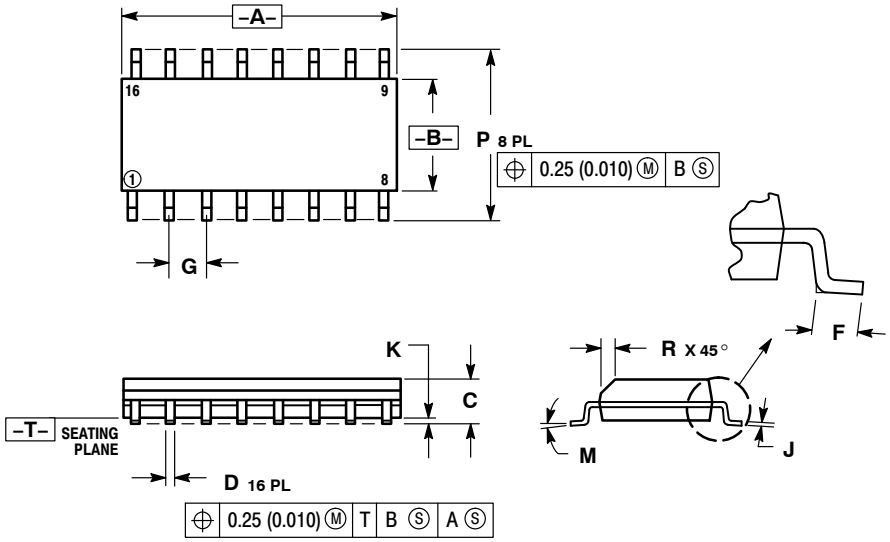

NOTES:
1. DIMENSIONING AND TOLERANCING PER ANSI Y14.5M, 1982.
2. CONTROLLING DIMENSION: MILLIMETER.
3. DIMENSIONS A AND B DO NOT INCLUDE MOLD PROTRUSION.
4. MAXIMUM MOLD PROTRUSION 0.15 (0.006) PER SIDE.
5. DIMENSION D DOES NOT INCLUDE DAMBAR PROTRUSION. ALLOWABLE DAMBAR PROTRUSION SHALL BE 0.127 (0.005) TOTAL IN EXCESS OF THE D DIMENSION AT MAXIMUM MATERIAL CONDITION.

	MILLIMETERS		INCHES	
DIM	MIN	MAX	MIN	MAX
A	9.80	10.00	0.386	0.393
B	3.80	4.00	0.150	0.157
C	1.35	1.75	0.054	0.068
D	0.35	0.49	0.014	0.019
F	0.40	1.25	0.016	0.049
G	1.27 BSC		0.050 BSC	
J	0.19	0.25	0.008	0.009
K	0.10	0.25	0.004	0.009
M	0°	7°	0°	7°
P	5.80	6.20	0.229	0.244
R	0.25	0.50	0.010	0.019

STYLE 1:
PIN 1. COLLECTOR
2. BASE
3. EMITTER
4. NO CONNECTION
5. EMITTER
6. BASE
7. COLLECTOR
8. COLLECTOR
9. BASE
10. EMITTER
11. NO CONNECTION
12. EMITTER
13. BASE
14. COLLECTOR
15. EMITTER
16. COLLECTOR

STYLE 2:
PIN 1. CATHODE
2. ANODE
3. NO CONNECTION
4. CATHODE
5. CATHODE
6. NO CONNECTION
7. ANODE
8. CATHODE
9. CATHODE
10. ANODE
11. NO CONNECTION
12. CATHODE
13. CATHODE
14. NO CONNECTION
15. ANODE
16. CATHODE

STYLE 3:
PIN 1. COLLECTOR, DYE #1
2. BASE, #1
3. EMITTER, #1
4. COLLECTOR, #1
5. COLLECTOR, #2
6. BASE, #2
7. EMITTER, #2
8. COLLECTOR, #2
9. COLLECTOR, #3
10. BASE, #3
11. EMITTER, #3
12. COLLECTOR, #3
13. COLLECTOR, #4
14. BASE, #4
15. EMITTER, #4
16. COLLECTOR, #4

STYLE 4:
PIN 1. COLLECTOR, DYE #1
2. COLLECTOR, #1
3. COLLECTOR, #2
4. COLLECTOR, #2
5. COLLECTOR, #3
6. COLLECTOR, #3
7. COLLECTOR, #4
8. COLLECTOR, #4
9. BASE, #4
10. EMITTER, #4
11. BASE, #3
12. EMITTER, #3
13. BASE, #2
14. EMITTER, #2
15. BASE, #1
16. EMITTER, #1

STYLE 5:
PIN 1. DRAIN, DYE #1
2. DRAIN, #1
3. DRAIN, #2
4. DRAIN, #2
5. DRAIN, #3
6. DRAIN, #3
7. DRAIN, #4
8. DRAIN, #4
9. GATE, #4
10. SOURCE, #4
11. GATE, #3
12. SOURCE, #3
13. GATE, #2
14. SOURCE, #2
15. GATE, #1
16. SOURCE, #1

STYLE 6:
PIN 1. CATHODE
2. CATHODE
3. CATHODE
4. CATHODE
5. CATHODE
6. CATHODE
7. CATHODE
8. CATHODE
9. ANODE
10. ANODE
11. ANODE
12. ANODE
13. ANODE
14. ANODE
15. ANODE
16. ANODE

STYLE 7:
PIN 1. SOURCE N-CH
2. COMMON DRAIN (OUTPUT)
3. COMMON DRAIN (OUTPUT)
4. GATE P-CH
5. COMMON DRAIN (OUTPUT)
6. COMMON DRAIN (OUTPUT)
7. COMMON DRAIN (OUTPUT)
8. SOURCE P-CH
9. SOURCE P-CH
10. COMMON DRAIN (OUTPUT)
11. COMMON DRAIN (OUTPUT)
12. COMMON DRAIN (OUTPUT)
13. GATE N-CH
14. COMMON DRAIN (OUTPUT)
15. COMMON DRAIN (OUTPUT)
16. SOURCE N-CH

SOLDERING FOOTPRINT

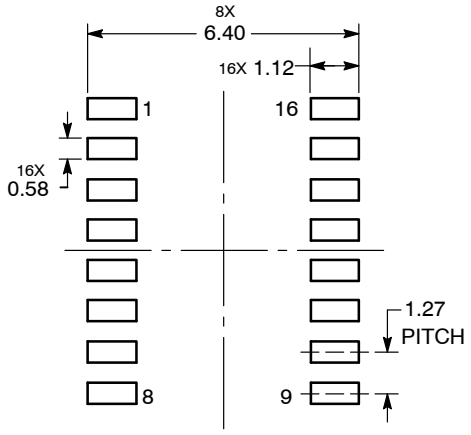

DIMENSIONS: MILLIMETERS

DOCUMENT NUMBER:	98ASB42566B	Electronic versions are uncontrolled except when accessed directly from the Document Repository. Printed versions are uncontrolled except when stamped "CONTROLLED COPY" in red.
DESCRIPTION:	SOIC–16	PAGE 1 OF 1

ON Semiconductor and ON are trademarks of Semiconductor Components Industries, LLC dba ON Semiconductor or its subsidiaries in the United States and/or other countries. ON Semiconductor reserves the right to make changes without further notice to any products herein. ON Semiconductor makes no warranty, representation or guarantee regarding the suitability of its products for any particular purpose, nor does ON Semiconductor assume any liability arising out of the application or use of any product or circuit, and specifically disclaims any and all liability, including without limitation special, consequential or incidental damages. ON Semiconductor does not convey any license under its patent rights nor the rights of others.

© Semiconductor Components Industries, LLC, 2019

onsemi, ONSEMI , and other names, marks, and brands are registered and/or common law trademarks of Semiconductor Components Industries, LLC dba "**onsemi**" or its affiliates and/or subsidiaries in the United States and/or other countries. **onsemi** owns the rights to a number of patents, trademarks, copyrights, trade secrets, and other intellectual property. A listing of **onsemi**'s product/patent coverage may be accessed at www.onsemi.com/site/pdf/Patent−Marking.pdf. **onsemi** reserves the right to make changes at any time to any products or information herein, without notice. The information herein is provided "as−is" and **onsemi** makes no warranty, representation or guarantee regarding the accuracy of the information, product features, availability, functionality, or suitability of its products for any particular purpose, nor does **onsemi** assume any liability arising out of the application or use of any product or circuit, and specifically disclaims any and all liability, including without limitation special, consequential or incidental damages. Buyer is responsible for its products and applications using **onsemi** products, including compliance with all laws, regulations and safety requirements or standards, regardless of any support or applications information provided by **onsemi**. "Typical" parameters which may be provided in **onsemi** data sheets and/or specifications can and do vary in different applications and actual performance may vary over time. All operating parameters, including "Typicals" must be validated for each customer application by customer's technical experts. **onsemi** does not convey any license under any of its intellectual property rights nor the rights of others. **onsemi** products are not designed, intended, or authorized for use as a critical component in life support systems or any FDA Class 3 medical devices or medical devices with a same or similar classification in a foreign jurisdiction or any devices intended for implantation in the human body. Should Buyer purchase or use **onsemi** products for any such unintended or unauthorized application, Buyer shall indemnify and hold **onsemi** and its officers, employees, subsidiaries, affiliates, and distributors harmless against all claims, costs, damages, and expenses, and reasonable attorney fees arising out of, directly or indirectly, any claim of personal injury or death associated with such unintended or unauthorized use, even if such claim alleges that **onsemi** was negligent regarding the design or manufacture of the part. **onsemi** is an Equal Opportunity/Affirmative Action Employer. This literature is subject to all applicable copyright laws and is not for resale in any manner.

PUBLICATION ORDERING INFORMATION

LITERATURE FULFILLMENT:
Email Requests to: orderlit@onsemi.com

onsemi Website: www.onsemi.com

TECHNICAL SUPPORT
North American Technical Support:
Voice Mail: 1 800−282−9855 Toll Free USA/Canada
Phone: 011 421 33 790 2910

Europe, Middle East and Africa Technical Support:
Phone: 00421 33 790 2910
For additional information, please contact your local Sales Representative

◊