3.3 V/5 V ECL Quad Differential Driver/Receiver

MC10EP17, MC100EP17

ON Semiconductor®

www.onsemi.com

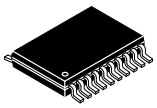

TSSOP−20
DT SUFFIX
CASE 948E

MARKING DIAGRAM*

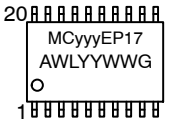

yyy	= 10 or 100
A	= Assembly Location
WL	= Wafer Lot
YY	= Year
WW	= Work Week
G	= Pb-Free Package

(Note: Microdot may be in either location)

*For additional marking information, refer to Application Note AND8002/D.

ORDERING INFORMATION

Device	Package	Shipping
MC10EP17DTG	TSSOP−20 WB (Pb-Free)	75 Units / Tube
MC100EP17DTG	TSSOP−20 WB (Pb-Free)	75 Units / Tube

Description

The MC10/100EP17 is a 4-bit differential line receiver based on the EP17 device. The > 3.0 GHz maximum frequency provided by the high frequency outputs makes the device ideal for buffering of very high speed oscillators.

The V_{BB} pin, an internally generated voltage supply, is available to this device only. For single-ended input conditions, the unused differential input is connected to V_{BB} as a switching reference voltage. V_{BB} may also rebias AC coupled inputs. When used, decouple V_{BB} and V_{CC} via a 0.01 μF capacitor and limit current sourcing or sinking to 0.5 mA. When not used, V_{BB} should be left open.

The design incorporates two stages of gain, internal to the device, making it an excellent choice for use in high bandwidth amplifier applications.

Inputs of unused gates can be left open and will not affect the operation of the rest of the device. All V_{CC} and V_{EE} pins must be externally connected to power supply to guarantee proper operation.

The 100 Series contains temperature compensation.

Features

- 220 ps Typical Propagation Delay
- Maximum Frequency > 3.0 GHz Typical
- PECL Mode Operating Range:
  - V_{CC} = 3.0 V to 5.5 V with V_{EE} = 0 V
- NECL Mode Operating Range:
  - V_{CC} = 0 V with V_{EE} = −3.0 V to −5.5 V
- Open Input Default State
- Safety Clamp on Inputs
- Q Output Will Default LOW with Inputs Open or at V_{EE}
- V_{BB} Output
- These Devices are Pb-Free, Halogen Free and are RoHS Compliant

© Semiconductor Components Industries, LLC, 2016

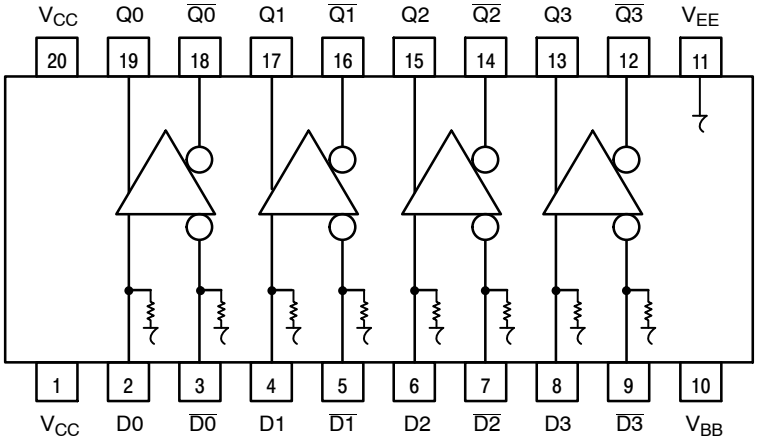

Figure 1. 20-Lead Pinout (Top View) and Logic Diagram

Table 1. PIN DESCRIPTION

PIN	FUNCTION
D[0:3]*, $\overline{D[0:3]}$*	ECL Differential Data Inputs
Q[0:3], $\overline{Q[0:3]}$	ECL Differential Data Outputs
V_{BB}	Reference Voltage Output
V_{CC}	Positive Supply
V_{EE}	Negative Supply

* Pins will default LOW when left open.

Table 2. ATTRIBUTES

Characteristics	Value
Internal Input Pulldown Resistor	75 kΩ
Internal Input Pullup Resistor	N/A
ESD Protection Human Body Model Machine Model Charged Device Model	 > 2 kV > 100 V > 2 kV
Moisture Sensitivity, Indefinite Time Out of Drypack (Note 1)	Pb-Free Pkg
TSSOP−20 WB	Level 3
Flammability Rating Oxygen Index: 28 to 34	 UL 94 V−0 @ 0.125 in
Transistor Count	259 Devices
Meets or exceeds JEDEC Spec EIA/JESD78 IC Latchup Test	

1. For additional information, see Application Note AND8003/D.

Table 3. MAXIMUM RATINGS

Symbol	Parameter	Condition 1	Condition 2	Rating	Unit
V_{CC}	PECL Mode Power Supply	V_{EE} = 0 V		6	V
V_{EE}	NECL Mode Power Supply	V_{CC} = 0 V		−6	V
V_I	PECL Mode Input Voltage NECL Mode Input Voltage	V_{EE} = 0 V V_{CC} = 0 V	$V_I \le V_{CC}$ $V_I \ge V_{EE}$	6 −6	V
I_{out}	Output Current	Continuous Surge		50 100	mA
I_{BB}	V_{BB} Sink/Source			± 0.5	mA
T_A	Operating Temperature Range			−40 to +85	°C
T_{stg}	Storage Temperature Range			−65 to +150	°C
θ_{JA}	Thermal Resistance (Junction-to-Ambient)	0 lfpm 500 lfpm	TSSOP−20 WB	140 100	°C/W
θ_{JC}	Thermal Resistance (Junction-to-Case)	Standard Board	TSSOP−20 WB	23 to 41	°C/W
T_{sol}	Wave Solder (Pb-Free)			265	°C

Stresses exceeding those listed in the Maximum Ratings table may damage the device. If any of these limits are exceeded, device functionality should not be assumed, damage may occur and reliability may be affected.

Table 4. 10EP DC CHARACTERISTICS, PECL (V_{CC} = 3.3 V, V_{EE} = 0 V (Note 1))

		−40°C			25°C			85°C			
Symbol	Characteristic	Min	Typ	Max	Min	Typ	Max	Min	Typ	Max	Unit
I_{EE}	Power Supply Current	42	50	65	44	52	66	46	54	68	mA
V_{OH}	Output HIGH Voltage (Note 2)	2165	2290	2415	2230	2355	2480	2290	2415	2540	mV
V_{OL}	Output LOW Voltage (Note 2)	1365	1490	1615	1430	1555	1680	1490	1615	1740	mV
V_{IH}	Input HIGH Voltage (Single-Ended)	2090		2415	2155		2480	2215		2540	mV
V_{IL}	Input LOW Voltage (Single-Ended)	365		1690	1430		1755	1490		1815	mV
V_{BB}	Output Voltage Reference	1790	1890	1990	1855	1955	2055	1915	2015	2115	mV
V_{IHCMR}	Input HIGH Voltage Common Mode Range (Differential) (Note 3)	2.0		3.3	2.0		3.3	2.0		3.3	V
I_{IH}	Input HIGH Current			150			150			150	μA
I_{IL}	Input LOW Current	0.5			0.5			0.5			μA

NOTE: Device will meet the specifications after thermal equilibrium has been established when mounted in a test socket or printed circuit board with maintained transverse airflow greater than 500 lfpm.

1. Input and output parameters vary 1:1 with V_{CC}. V_{EE} can vary +0.3 V to −2.2 V.
2. All loading with 50 Ω to V_{CC} − 2.0 V.
3. V_{IHCMR} min varies 1:1 with V_{EE}, V_{IHCMR} max varies 1:1 with V_{CC}. The V_{IHCMR} range is referenced to the most positive side of the differential input signal.

Table 5. 10EP DC CHARACTERISTICS, PECL (V_{CC} = 5.0 V, V_{EE} = 0 V (Note 1))

Symbol	Characteristic	−40°C			25°C			85°C			Unit
		Min	Typ	Max	Min	Typ	Max	Min	Typ	Max	
I_{EE}	Power Supply Current	42	50	65	44	52	66	46	54	68	mA
V_{OH}	Output HIGH Voltage (Note 2)	3865	3990	4115	3930	4055	4180	3990	4115	4240	mV
V_{OL}	Output LOW Voltage (Note 2)	3065	3190	3315	3130	3255	3380	3190	3315	3440	mV
V_{IH}	Input HIGH Voltage (Single-Ended)	3790		4115	3855		4180	3915		4240	mV
V_{IL}	Input LOW Voltage (Single-Ended)	3065		3390	3130		3455	3190		3515	mV
V_{BB}	Output Voltage Reference	3490	3590	3690	3555	3655	3755	3615	3715	3815	mV
V_{IHCMR}	Input HIGH Voltage Common Mode Range (Differential) (Note 3)	2.0		5.0	2.0		5.0	2.0		5.0	V
I_{IH}	Input HIGH Current			150			150			150	μA
I_{IL}	Input LOW Current	0.5			0.5			0.5			μA

NOTE: Device will meet the specifications after thermal equilibrium has been established when mounted in a test socket or printed circuit board with maintained transverse airflow greater than 500 lfpm.

1. Input and output parameters vary 1:1 with V_{CC}. V_{EE} can vary +2.0 V to −0.5 V.
2. All loading with 50 Ω to V_{CC} − 2.0 V.
3. V_{IHCMR} min varies 1:1 with V_{EE}, V_{IHCMR} max varies 1:1 with V_{CC}. The V_{IHCMR} range is referenced to the most positive side of the differential input signal.

Table 6. 10EP DC CHARACTERISTICS, NECL (V_{CC} = 0 V; V_{EE} = −5.5 V to −3.0 V (Note 1))

Symbol	Characteristic	−40°C			25°C			85°C			Unit
		Min	Typ	Max	Min	Typ	Max	Min	Typ	Max	
I_{EE}	Power Supply Current	42	50	65	44	52	66	46	54	68	mA
VOH	Output HIGH Voltage (Note 2)	−1135	−1010	−885	−1070	−945	−820	−1010	−885	−760	mV
V_{OL}	Output LOW Voltage (Note 2)	−1935	−1810	−1685	−1870	−1745	−1620	−1810	−1685	−1560	mV
V_{IH}	Input HIGH Voltage (Single-Ended)	−1210		−885	−1145		−820	−1085		−760	mV
V_{IL}	Input LOW Voltage (Single-Ended)	−1935		−1610	−1870		−1545	−1810		−1485	mV
V_{BB}	Output Voltage Reference	−1510	−1410	−1310	−1445	−1345	−1245	−1385	−1285	−1185	mV
V_{IHCMR}	Input HIGH Voltage Common Mode Range (Differential) (Note 3)	V_{EE} + 2.0		0.0	V_{EE} + 2.0		0.0	V_{EE} + 2.0		0.0	V
I_{IH}	Input HIGH Current			150			150			150	μA
I_{IL}	Input LOW Current	0.5			0.5			0.5			μA

NOTE: Device will meet the specifications after thermal equilibrium has been established when mounted in a test socket or printed circuit board with maintained transverse airflow greater than 500 lfpm.

1. Input and output parameters vary 1:1 with V_{CC}.
2. All loading with 50 Ω to V_{CC} − 2.0 V.
3. V_{IHCMR} min varies 1:1 with V_{EE}, V_{IHCMR} max varies 1:1 with V_{CC}. The V_{IHCMR} range is referenced to the most positive side of the differential input signal.

Table 7. 100EP DC CHARACTERISTICS, PECL (V_{CC} = 3.3 V, V_{EE} = 0 V (Note 1))

Symbol	Characteristic	−40°C			25°C			85°C			Unit
		Min	Typ	Max	Min	Typ	Max	Min	Typ	Max	
I_{EE}	Power Supply Current	47	55	63	50	58	66	54	62	70	mA
V_{OH}	Output HIGH Voltage (Note 2)	2155	2280	2405	2155	2280	2405	2155	2280	2405	mV
V_{OL}	Output LOW Voltage (Note 2)	1355	1480	1605	1355	1480	1605	1355	1480	1605	mV
V_{IH}	Input HIGH Voltage (Single-Ended)	2075		2420	2075		2420	2075		2420	mV
V_{IL}	Input LOW Voltage (Single-Ended)	1355		1675	1355		1675	1355		1675	mV
V_{BB}	Output Voltage Reference	1775	1875	1975	1775	1875	1975	1775	1875	1975	mV
V_{IHCMR}	Input HIGH Voltage Common Mode Range (Differential) (Note 3)	2.0		3.3	2.0		3.3	2.0		3.3	V
I_{IH}	Input HIGH Current			150			150			150	μA
I_{IL}	Input LOW Current	0.5			0.5			0.5			μA

NOTE: Device will meet the specifications after thermal equilibrium has been established when mounted in a test socket or printed circuit board with maintained transverse airflow greater than 500 lfpm.

1. Input and output parameters vary 1:1 with V_{CC}. V_{EE} can vary +0.3 V to −2.2 V.
2. All loading with 50 Ω to V_{CC} − 2.0 V.
3. V_{IHCMR} min varies 1:1 with V_{EE}, V_{IHCMR} max varies 1:1 with V_{CC}. The V_{IHCMR} range is referenced to the most positive side of the differential input signal.

Table 8. 100EP DC CHARACTERISTICS, PECL (V_{CC} = 5.0 V, V_{EE} = 0 V (Note 1))

Symbol	Characteristic	−40°C			25°C			85°C			Unit
		Min	Typ	Max	Min	Typ	Max	Min	Typ	Max	
I_{EE}	Power Supply Current	47	55	63	50	58	66	54	62	70	mA
V_{OH}	Output HIGH Voltage (Note 2)	3855	3980	4105	3855	3980	4105	3855	3980	4105	mV
V_{OL}	Output LOW Voltage (Note 2)	3055	3180	3305	3055	3180	3305	3055	3180	3305	mV
V_{IH}	Input HIGH Voltage (Single-Ended)	3775		4120	3775		4120	3775		4120	mV
V_{IL}	Input LOW Voltage (Single-Ended)	3055		3375	3055		3375	3055		3375	mV
V_{BB}	Output Voltage Reference	3475	3575	3675	3475	3575	3675	3475	3575	3675	mV
V_{IHCMR}	Input HIGH Voltage Common Mode Range (Differential) (Note 3)	2.0		5.0	2.0		5.0	2.0		5.0	V
I_{IH}	Input HIGH Current			150			150			150	μA
I_{IL}	Input LOW Current	0.5			0.5			0.5			μA

NOTE: Device will meet the specifications after thermal equilibrium has been established when mounted in a test socket or printed circuit board with maintained transverse airflow greater than 500 lfpm.

1. Input and output parameters vary 1:1 with V_{CC}. V_{EE} can vary +2.0 V to −0.5 V.
2. All loading with 50 Ω to V_{CC} − 2.0 V.
3. V_{IHCMR} min varies 1:1 with V_{EE}, V_{IHCMR} max varies 1:1 with V_{CC}. The V_{IHCMR} range is referenced to the most positive side of the differential input signal.

Table 9. 100EP DC CHARACTERISTICS, NECL (V_{CC} = 0 V; V_{EE} = −5.5 V to −3.0 V (Note 1))

Symbol	Characteristic	−40°C			25°C			85°C			Unit
		Min	Typ	Max	Min	Typ	Max	Min	Typ	Max	
I_{EE}	Power Supply Current	47	55	63	50	58	66	54	62	70	mA
V_{OH}	Output HIGH Voltage (Note 2)	−1145	−1020	−895	−1145	−1020	−895	−1145	−1020	−895	mV
V_{OL}	Output LOW Voltage (Note 2)	−1945	−1820	−1695	−1945	−1820	−1695	−1945	−1820	−1695	mV
V_{IH}	Input HIGH Voltage (Single-Ended)	−1225		−880	−1225		−880	−1225		−880	mV
V_{IL}	Input LOW Voltage (Single-Ended)	−1945		−1625	−1945		−1625	−1945		−1625	mV
V_{BB}	Output Voltage Reference	−1525	−1425	−1325	−1525	−1425	−1325	−1525	−1425	−1325	mV
V_{IHCMR}	Input HIGH Voltage Common Mode Range (Differential) (Note 3)	V_{EE} + 2.0		0.0	V_{EE} + 2.0		0.0	V_{EE} + 2.0		0.0	V
I_{IH}	Input HIGH Current			150			150			150	μA
I_{IL}	Input LOW Current	0.5			0.5			0.5			μA

NOTE: Device will meet the specifications after thermal equilibrium has been established when mounted in a test socket or printed circuit board with maintained transverse airflow greater than 500 lfpm.

1. Input and output parameters vary 1:1 with V_{CC}.
2. All loading with 50 Ω to V_{CC} − 2.0 V.
3. V_{IHCMR} min varies 1:1 with V_{EE}, V_{IHCMR} max varies 1:1 with V_{CC}. The V_{IHCMR} range is referenced to the most positive side of the differential input signal.

Table 10. AC CHARACTERISTICS (V_{CC} = 0 V; V_{EE} = −3.0 V to −5.5 V or V_{CC} = 3.0 V to 5.5 V; V_{EE} = 0 V (Note 1))

Symbol	Characteristic	−40°C			25°C			85°C			Unit
		Min	Typ	Max	Min	Typ	Max	Min	Typ	Max	
f_{max}	Maximum Frequency (Figure 2)		> 3			> 3			> 3		GHz
t_{PLH}, t_{PHL}	Propagation Delay to Output Differential 10 Series 100 Series	 125 150	 200 220	 275 300	 150 180	 220 250	 300 320	 200 200	 260 290	 350 360	ps
t_{JITTER}	CLOCK Random Jitter (RMS) @ ≤ 1.0 GHz @ ≤ 1.5 GHz @ ≤ 2.0 GHz @ ≤ 2.5 GHz @ ≤ 3.0 GHz	 	 0.132 0.143 0.148 0.129 0.129	 0.2 0.3 0.3 0.3 0.3	 	 0.147 0.159 0.146 0.131 0.142	 0.2 0.3 0.3 0.3 0.3	 	 0.154 0.156 0.169 0.147 0.168	 0.3 0.3 0.3 0.3 0.3	ps
V_{PP}	Input Voltage Swing (Differential Configuration)	150	800	1200	150	800	1200	150	800	1200	mV
t_r t_f	Output Rise/Fall Times Q, (20% − 80%)	100	160	220	100	170	230	120	190	250	ps

NOTE: Device will meet the specifications after thermal equilibrium has been established when mounted in a test socket or printed circuit board with maintained transverse airflow greater than 500 lfpm.

1. Measured using a 750 mV source, 50% duty cycle clock source. All loading with 50 Ω to V_{CC} − 2.0 V.

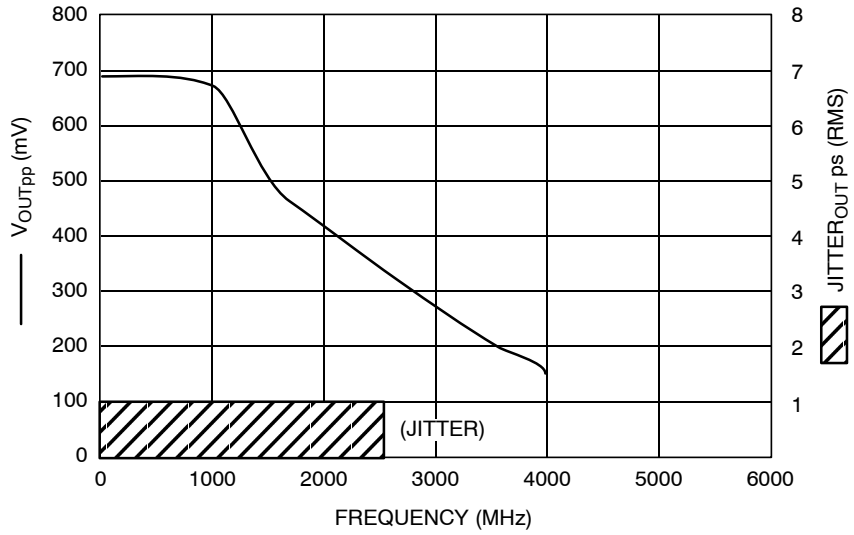

Figure 2. F_{max}/Jitter

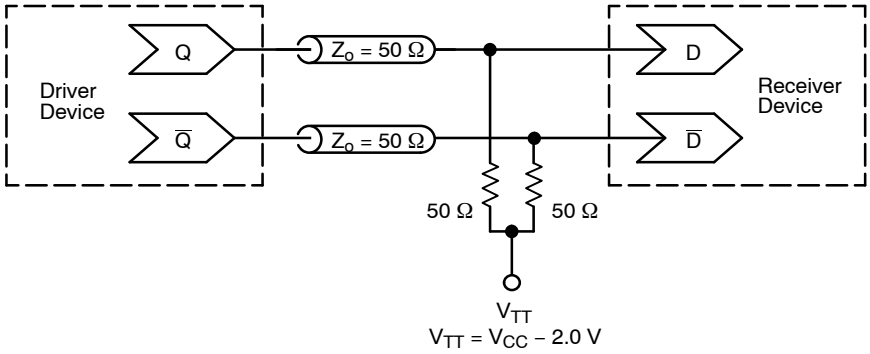

Figure 3. Typical Termination for Output Driver and Device Evaluation (See Application Note AND8020/D – Termination of ECL Logic Devices.)

Resource Reference of Application Notes

AN1405/D – ECL Clock Distribution Techniques

AN1406/D – Designing with PECL (ECL at +5.0 V)

AN1503/D – ECLinPS™ I/O SPiCE Modeling Kit

AN1504/D – Metastability and the ECLinPS Family

AN1568/D – Interfacing Between LVDS and ECL

AN1672/D – The ECL Translator Guide

AND8001/D – Odd Number Counters Design

AND8002/D – Marking and Date Codes

AND8020/D – Termination of ECL Logic Devices

AND8066/D – Interfacing with ECLinPS

AND8090/D – AC Characteristics of ECL Devices

ECLinPS is a trademark of Semiconductor Components Industries, LLC (SCILLC) or its subsidiaries in the United States and/or other countries.

MECHANICAL CASE OUTLINE
PACKAGE DIMENSIONS

ON Semiconductor®

TSSOP−20 WB
CASE 948E
ISSUE D

DATE 17 FEB 2016

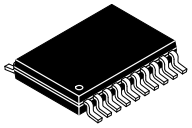

SCALE 2:1

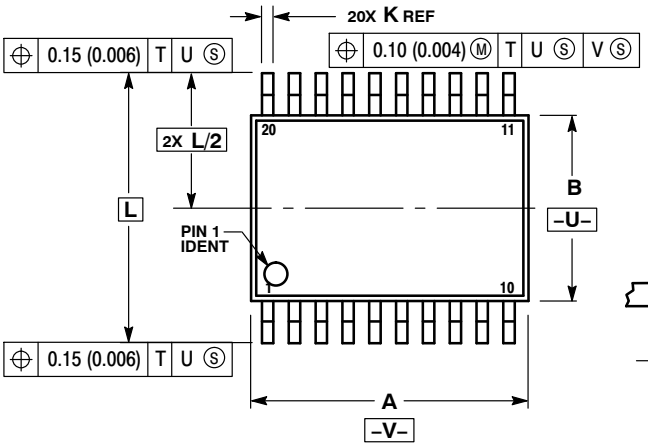

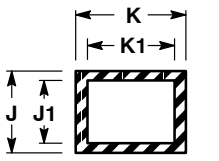

SECTION N−N

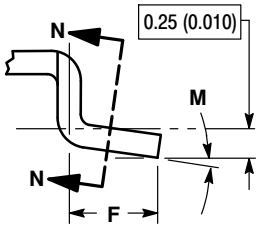

DETAIL E

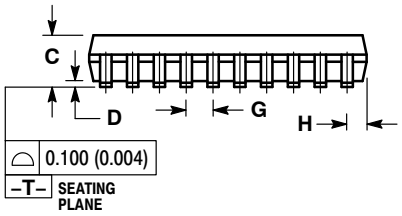

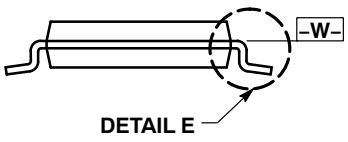

NOTES:
1. DIMENSIONING AND TOLERANCING PER ANSI Y14.5M, 1982.
2. CONTROLLING DIMENSION: MILLIMETER.
3. DIMENSION A DOES NOT INCLUDE MOLD FLASH, PROTRUSIONS OR GATE BURRS. MOLD FLASH OR GATE BURRS SHALL NOT EXCEED 0.15 (0.006) PER SIDE.
4. DIMENSION B DOES NOT INCLUDE INTERLEAD FLASH OR PROTRUSION. INTERLEAD FLASH OR PROTRUSION SHALL NOT EXCEED 0.25 (0.010) PER SIDE.
5. DIMENSION K DOES NOT INCLUDE DAMBAR PROTRUSION. ALLOWABLE DAMBAR PROTRUSION SHALL BE 0.08 (0.003) TOTAL IN EXCESS OF THE K DIMENSION AT MAXIMUM MATERIAL CONDITION.
6. TERMINAL NUMBERS ARE SHOWN FOR REFERENCE ONLY.
7. DIMENSION A AND B ARE TO BE DETERMINED AT DATUM PLANE −W−.

	MILLIMETERS		INCHES	
DIM	MIN	MAX	MIN	MAX
A	6.40	6.60	0.252	0.260
B	4.30	4.50	0.169	0.177
C	---	1.20	---	0.047
D	0.05	0.15	0.002	0.006
F	0.50	0.75	0.020	0.030
G	0.65 BSC		0.026 BSC	
H	0.27	0.37	0.011	0.015
J	0.09	0.20	0.004	0.008
J1	0.09	0.16	0.004	0.006
K	0.19	0.30	0.007	0.012
K1	0.19	0.25	0.007	0.010
L	6.40 BSC		0.252 BSC	
M	0°	8°	0°	8°

SOLDERING FOOTPRINT

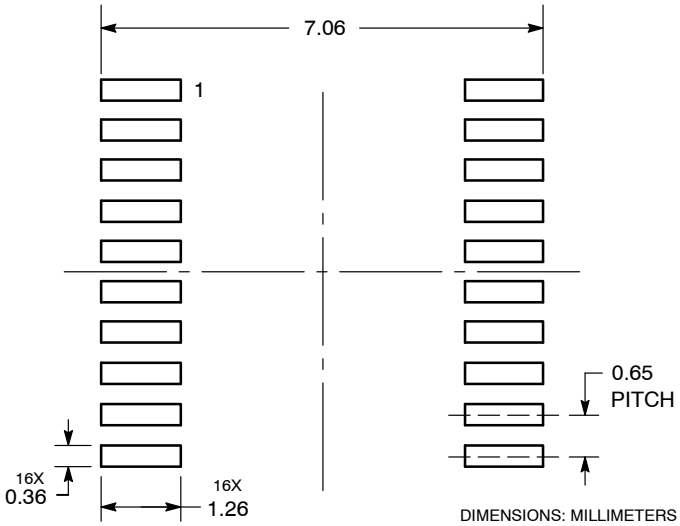

DIMENSIONS: MILLIMETERS

GENERIC MARKING DIAGRAM*

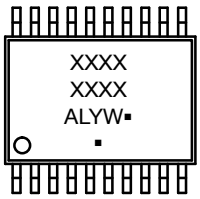

A = Assembly Location
L = Wafer Lot
Y = Year
W = Work Week
▪ = Pb−Free Package

(Note: Microdot may be in either location)

*This information is generic. Please refer to device data sheet for actual part marking. Pb−Free indicator, “G” or microdot “ ▪”, may or may not be present.

DOCUMENT NUMBER:	98ASH70169A	Electronic versions are uncontrolled except when accessed directly from the Document Repository. Printed versions are uncontrolled except when stamped “CONTROLLED COPY” in red.
DESCRIPTION:	TSSOP−20 WB	PAGE 1 OF 1

ON Semiconductor and ON are trademarks of Semiconductor Components Industries, LLC dba ON Semiconductor or its subsidiaries in the United States and/or other countries. ON Semiconductor reserves the right to make changes without further notice to any products herein. ON Semiconductor makes no warranty, representation or guarantee regarding the suitability of its products for any particular purpose, nor does ON Semiconductor assume any liability arising out of the application or use of any product or circuit, and specifically disclaims any and all liability, including without limitation special, consequential or incidental damages. ON Semiconductor does not convey any license under its patent rights nor the rights of others.

© Semiconductor Components Industries, LLC, 2019

onsemi, ONSEMI , and other names, marks, and brands are registered and/or common law trademarks of Semiconductor Components Industries, LLC dba "**onsemi**" or its affiliates and/or subsidiaries in the United States and/or other countries. **onsemi** owns the rights to a number of patents, trademarks, copyrights, trade secrets, and other intellectual property. A listing of **onsemi**'s product/patent coverage may be accessed at www.onsemi.com/site/pdf/Patent−Marking.pdf. **onsemi** reserves the right to make changes at any time to any products or information herein, without notice. The information herein is provided "as−is" and **onsemi** makes no warranty, representation or guarantee regarding the accuracy of the information, product features, availability, functionality, or suitability of its products for any particular purpose, nor does **onsemi** assume any liability arising out of the application or use of any product or circuit, and specifically disclaims any and all liability, including without limitation special, consequential or incidental damages. Buyer is responsible for its products and applications using **onsemi** products, including compliance with all laws, regulations and safety requirements or standards, regardless of any support or applications information provided by **onsemi**. "Typical" parameters which may be provided in **onsemi** data sheets and/or specifications can and do vary in different applications and actual performance may vary over time. All operating parameters, including "Typicals" must be validated for each customer application by customer's technical experts. **onsemi** does not convey any license under any of its intellectual property rights nor the rights of others. **onsemi** products are not designed, intended, or authorized for use as a critical component in life support systems or any FDA Class 3 medical devices or medical devices with a same or similar classification in a foreign jurisdiction or any devices intended for implantation in the human body. Should Buyer purchase or use **onsemi** products for any such unintended or unauthorized application, Buyer shall indemnify and hold **onsemi** and its officers, employees, subsidiaries, affiliates, and distributors harmless against all claims, costs, damages, and expenses, and reasonable attorney fees arising out of, directly or indirectly, any claim of personal injury or death associated with such unintended or unauthorized use, even if such claim alleges that **onsemi** was negligent regarding the design or manufacture of the part. **onsemi** is an Equal Opportunity/Affirmative Action Employer. This literature is subject to all applicable copyright laws and is not for resale in any manner.

PUBLICATION ORDERING INFORMATION

LITERATURE FULFILLMENT:
Email Requests to: orderlit@onsemi.com

onsemi Website: www.onsemi.com

TECHNICAL SUPPORT
North American Technical Support:
Voice Mail: 1 800−282−9855 Toll Free USA/Canada
Phone: 011 421 33 790 2910

Europe, Middle East and Africa Technical Support:
Phone: 00421 33 790 2910
For additional information, please contact your local Sales Representative

◊