Sinusoidal Sensorless Three-Phase Brushless DC Motor Controller and Predriver

LV8961HUW

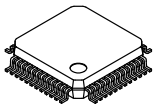

SQFP48K
CASE 131AN

MARKING DIAGRAM

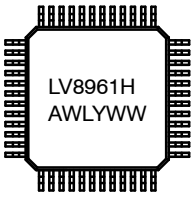

A = Assembly Site
WL = Wafer Lot Number
Y = Year of production, Last Number
WW = Work Week Number
LV8961H = Specific Device Code

ORDERING INFORMATION

Device	Package	Shipping†
LV8961HUWR2G	SQFP48K (Pb−Free)	2,500 / Tape & Reel

†For information on tape and reel specifications, including part orientation and tape sizes, please refer to our Tape and Reel Packaging Specification Brochure, BRD8011/D.

Overview

The LV8961 is a high performance sinusoidal sensorless three−phase BLDC motor controller with predrivers for automotive applications. An integrated two−stage charge pump provides gate current for a wide range of ultra low Rdson NFETs. The device offers a rich set of system protection and diagnostic functions such as overcurrent, overvoltage, short−circuit, undervoltage, overtemperature and many more. It supports open−loop as well as closed−loop speed control based on Back ElectroMotive Force (BEMF) observation. The user configurable startup, speed setting and proportional/integral (PI) control coefficients, make LV8961 suitable for a wide range of motor− and load combinations. With a built−in linear regulator for powering an external circuit and a watchdog timer, the LV8961 offers a very small system solution. A one−time programmable (OTP) non−volatile memory in addition to RAM and an SPI interface is provided for parameter setting and monitoring of the system status. With the operating junction temperature tolerance up to 175°C, the LV8961 is an ideal solution for stand−alone automotive and industrial BLDC motor control systems.

Features

- AEC−Q100 Qualified and PPAP Capable
- Operating Junction Temperature up to 175°C
- Operating Voltage Range from 5.5 V to 28 V with Tolerance from 4.5 V to 40 V
- Embedded Proprietary Sensorless Trapezoidal and Sinusoidal Commutation
- Selectable Number of BEMF Zero−crossing Detection Window from 6, 3, 2, and 1 per Electrical Cycle
- Simple and Effective Lead Angle Adjustment Setting by Register
- Supports Open-loop as well as Closed-loop Speed Control
- Integrated Predrivers for Driving Six N−MOSFETs
- Two-stage Charge Pump for Continuous 100% Duty Cycle Operation
- 5 V / 3.3 V Regulator and Watchdog Timer Applications Using an External Microcontroller
- Configurable Speed Settings with Linear Characteristic
- PI Control Include Acceleration/Deceleration Adjustment
- Direct Access to PWM Duty and FG Cycle via SPI Interface
- Various System Protection Features Including:
  - Shoot through Protection Using Configurable Dead Time
  - Drain-source Short Detection
  - Cycle-by-cycle Current Limit and Overcurrent Shutdown (Threshold Value can be Selectable by Register)
  - Overvoltage and Undervoltage Shutdown
  - Overtemperature Warning and Shutdown
  - Input PWM Fault Detection
  - Abnormal FG Cycle Monitoring
  - Motor Pin Open Detection

Typical Applications

- Pumps (Fuel, Oil, Coolant, Hydraulic Controls, Vacuum, Solar Boilers, …)
- Fans and Blowers (HVAC, Radiator, Condenser, Battery, Inverter, Charger, …)
- White Goods and Industrial BLDC Motor Control

© Semiconductor Components Industries, LLC, 2018

LV8961H BLOCK DIAGRAM

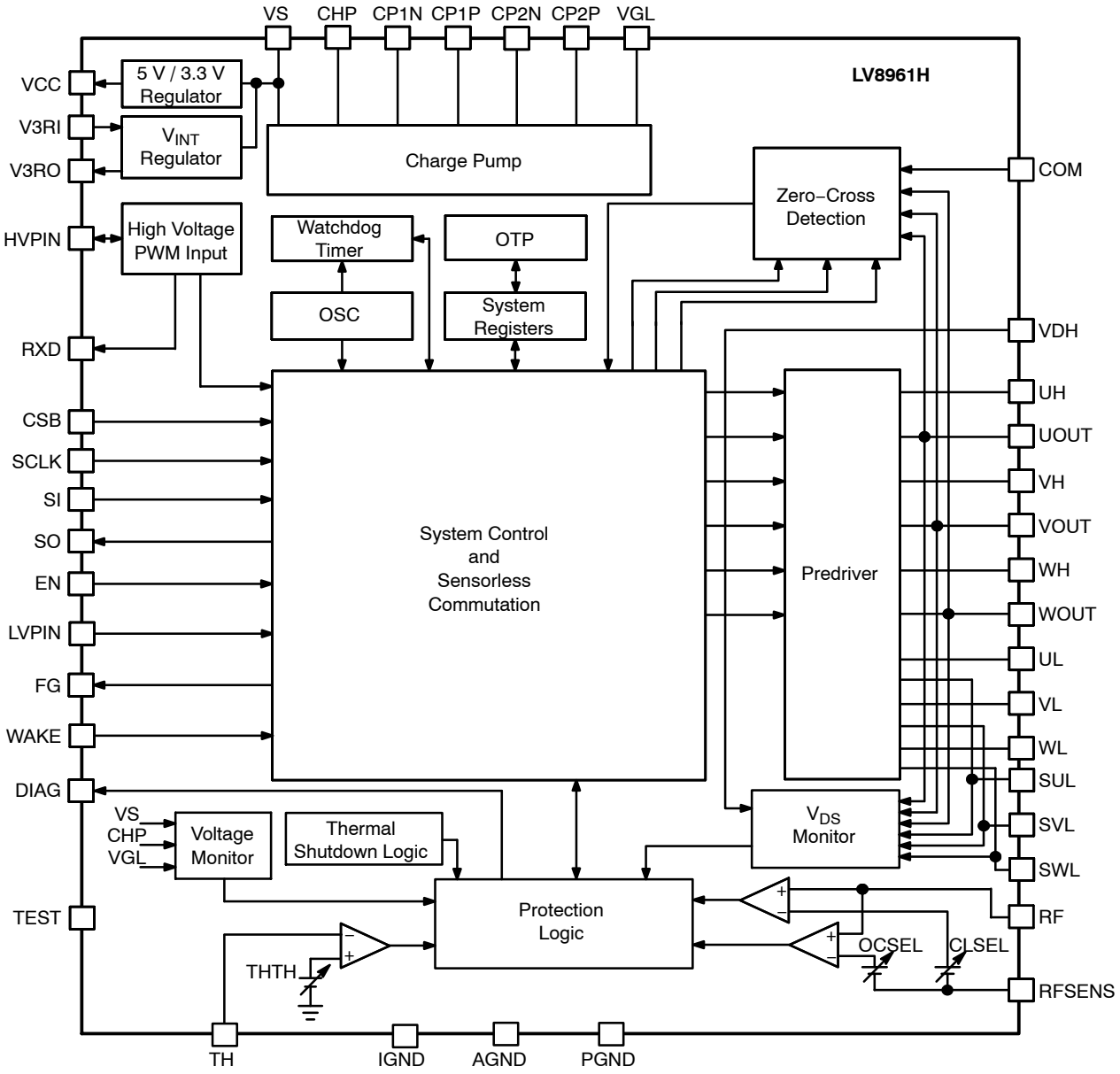

Figure 1. LV8961H Block Diagram

APPLICATION BLOCK DIAGRAMS

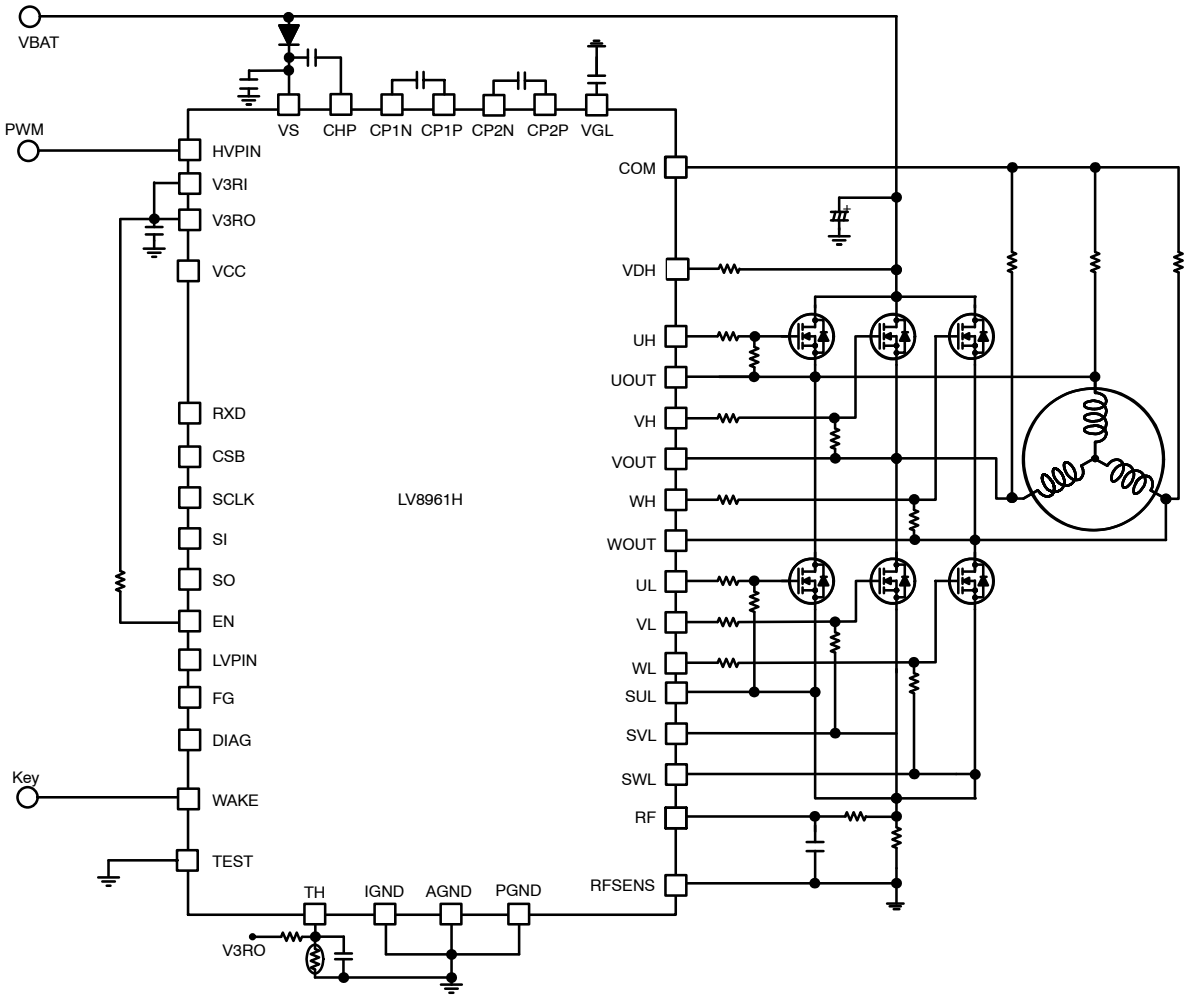

Figure 2. Example of Stand−alone Configuration

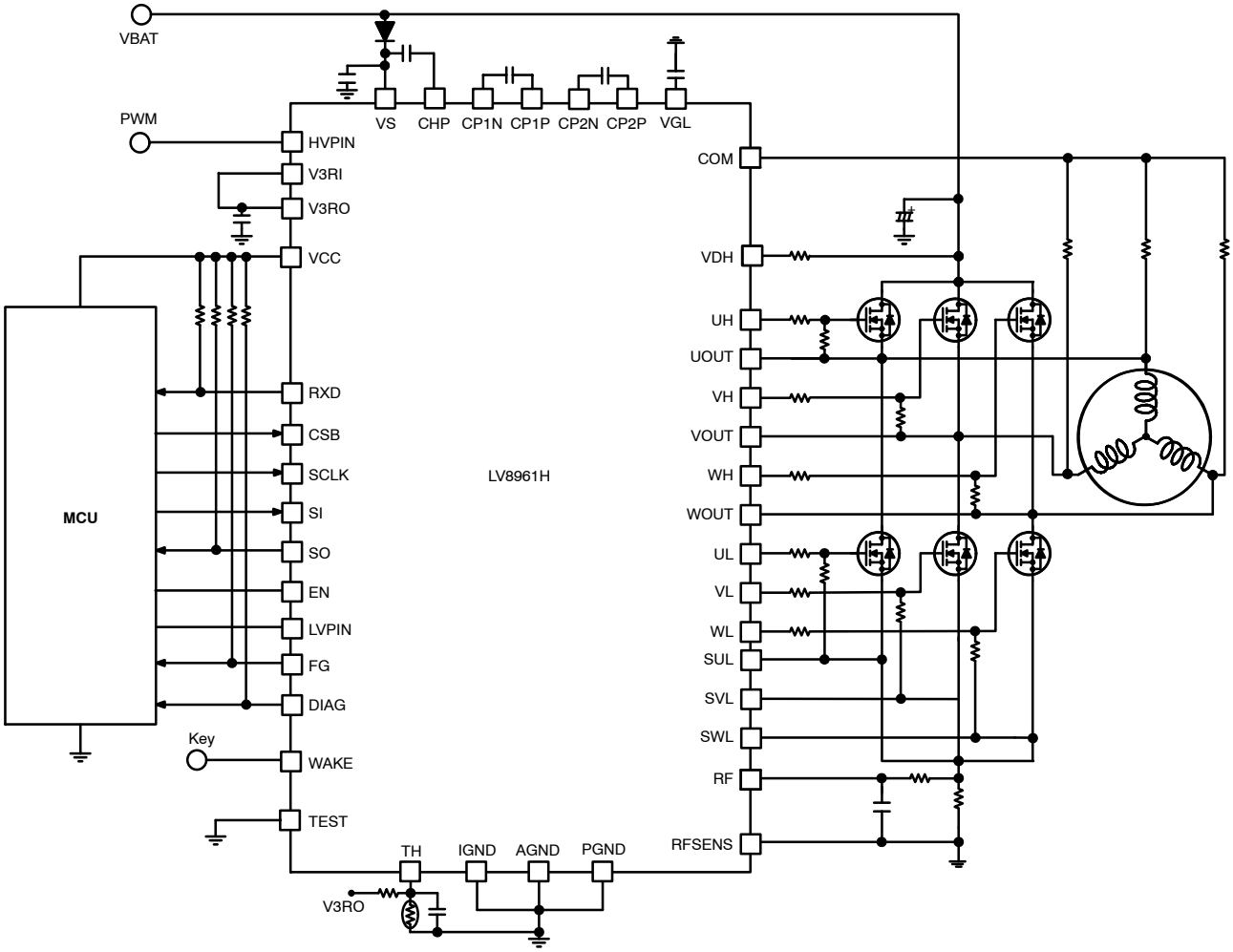

Figure 3. Example of MCU Based Control Configuration

PIN ASSIGNMENTS

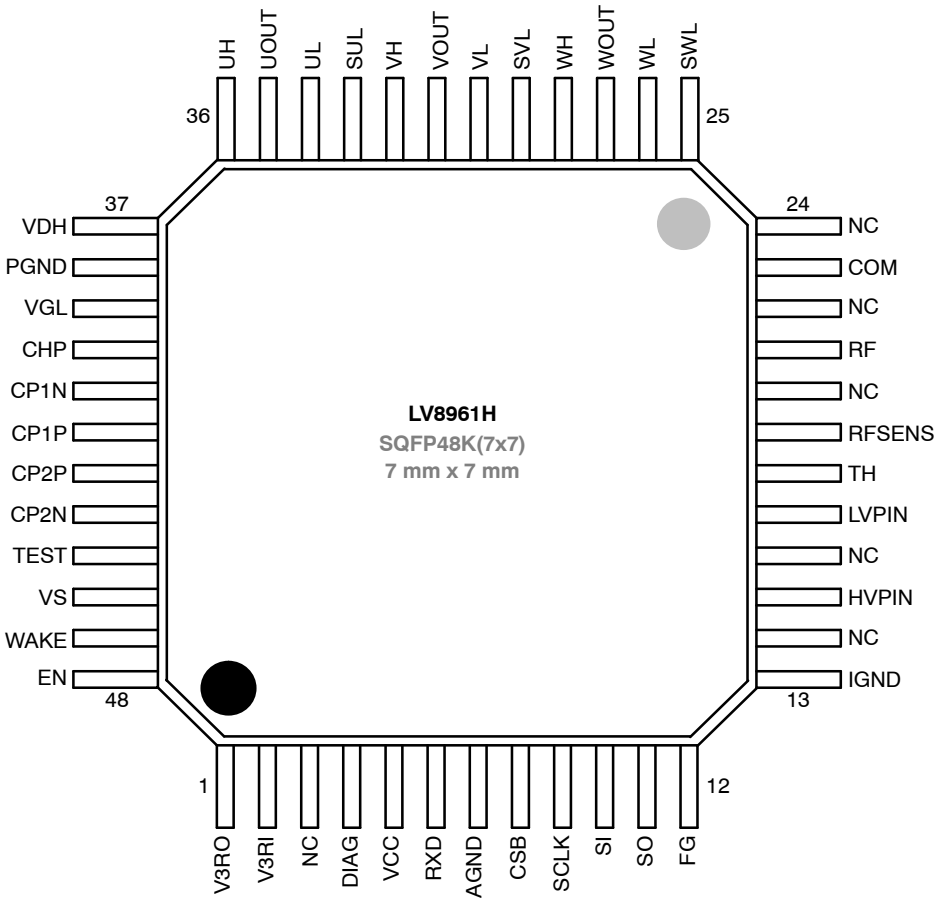

Figure 4. LV8961H Pinout

PIN DESCRIPTION

Pin Name	Pin No	TYPE	Description	Page
V3RO	1	TYPE 2	3 V regulator output pin. Connect capacitor between this pin and AGND	19
V3RI	2	TYPE 1	3 V regulator input pin (internally connected to control, and logic circuits). Connect to V3RO pin	19
NC	3, 14, 16, 20, 22, 24		No Connections	
DIAG	4	TYPE 4	Programmable open drain diagnostic output	21
VCC	5	TYPE 2	5 V or 3.3 V regulator output pin. (Selected by internal register setting) Power supply for microcontroller. Connect capacitor to AGND for stability	19
RXD	6	TYPE 4	Open drain logic level output of HVPIN received data. Use pull-up to a voltage less than or equal to VS	21
AGND	7		Analog GND pin	
CSB	8	TYPE 5	Active low SPI interface chip selection pin	26
SCLK	9	TYPE 3	SPI interface clock input pin	26
SI	10	TYPE 3	Active high SPI interface serial data input pin	26
SO	11	TYPE 4	Open drain SPI interface serial data output pin	26
FG	12	TYPE 4	Open drain BEMF transition output pin. The frequency division ratio is selectable via register settings	21
IGND	13	TYPE 12	HV PWMIN Block GND pin. Must be connected to AGND on the PCB	
HVPIN	15	TYPE 12	High voltage PWM input with a V_{VS}/2 threshold	21
LVPIN	17	TYPE 3	Digital level PWM input pin for direct drive or speed register selection details. Input polarity can be programmed for either active high or active low	21
TH	18	TYPE 1	Thermistor input pin for power stage temperature detection. If the input voltage is below the threshold voltage, an error is triggered. The error threshold is programmable. To disable tie to V3RO	23
RFSENS	19	TYPE 13	Shunt resistance reference pin. Connect this pin to the GND side of the Shunt resistor with Kelvin leads	22
RF	21	TYPE 13	Output current detect pin. Connect this pin to higher terminal of the shunt resistor with Kelvin leads	22
COM	23	TYPE 9	COM input pin. Connect this pin to the motor neutral point if available. This point may be derived from a resistive network with 1 k resistors to the phases	15
SWL SVL SUL	25 29 33	TYPE 8 TYPE 8 TYPE 8	Current return path for low−side predriver. Short−circuit shutoff level is measured between this pin and its corresponding phase pin	21
WL VL UL	26 30 34	TYPE 8 TYPE 8 TYPE 8	Predriver output pin for the low−side NFET. Use gate resistors for wave−shaping	21
WOUT VOUT UOUT	27 31 35	TYPE 7 TYPE 7 TYPE 7	Current return path for high−side predriver and reference for high−side short−circuit shutoff	21
WH VH UH	28 32 36	TYPE 7 TYPE 7 TYPE 7	Predriver output pin for the high−side NFET. Use gate resistors for wave−shaping	21
VDH	37	TYPE 14	Sense input for supply voltage and short−circuit detection of high−side power Fets. Connect through 100 Ω resistor to common drain of the power bridge	21
PGND	38	TYPE 10, 11	GND pin for the charge pump	
VGL	39	TYPE 10	Power supply pin for low−side predriver. Connect decoupling capacitor between this pin and GND	19
CHP	40	TYPE 11	Power supply pin for high−side predriver. Connect decoupling capacitor between this pin and VS	19

PIN DESCRIPTION (continued)

Pin Name	Pin No	TYPE	Description	Page
CP1N	41	TYPE 10	Charge transfer pin of the Charge pump (1N). Connect capacitor between CP1P and CP1N	19
CP1P	42	TYPE 10	Charge transfer pin of the Charge pump (1P). Connect capacitor between CP1P and CP1N	19
CP2P	43	TYPE 11	Charge transfer pin of the Charge pump (2P). Connect capacitor between CP2P and CP2N	19
CP2N	44	TYPE 11	Charge transfer pin of the Charge pump (2N). Connect capacitor between CP2P and CP2N	19
TEST	45	TYPE 15	Factory test pin. Connect to GND	
VS	46		Power supply pin	
WAKE	47	TYPE 6	WAKE pin. “H” = Operating mode, “L” or “Open” = Sleep mode. In Sleep mode all predrivers are high impedance. To protect the power stage, pull-down resistors on the gate lines may be required	18
EN	48	TYPE 3	Motor stage Enable pin. “H” = Normal enabled mode; “L” or “Open” = Standby mode. In Standby mode all predrivers are driven low. Motor freewheeling	18

PIN CIRCUIT

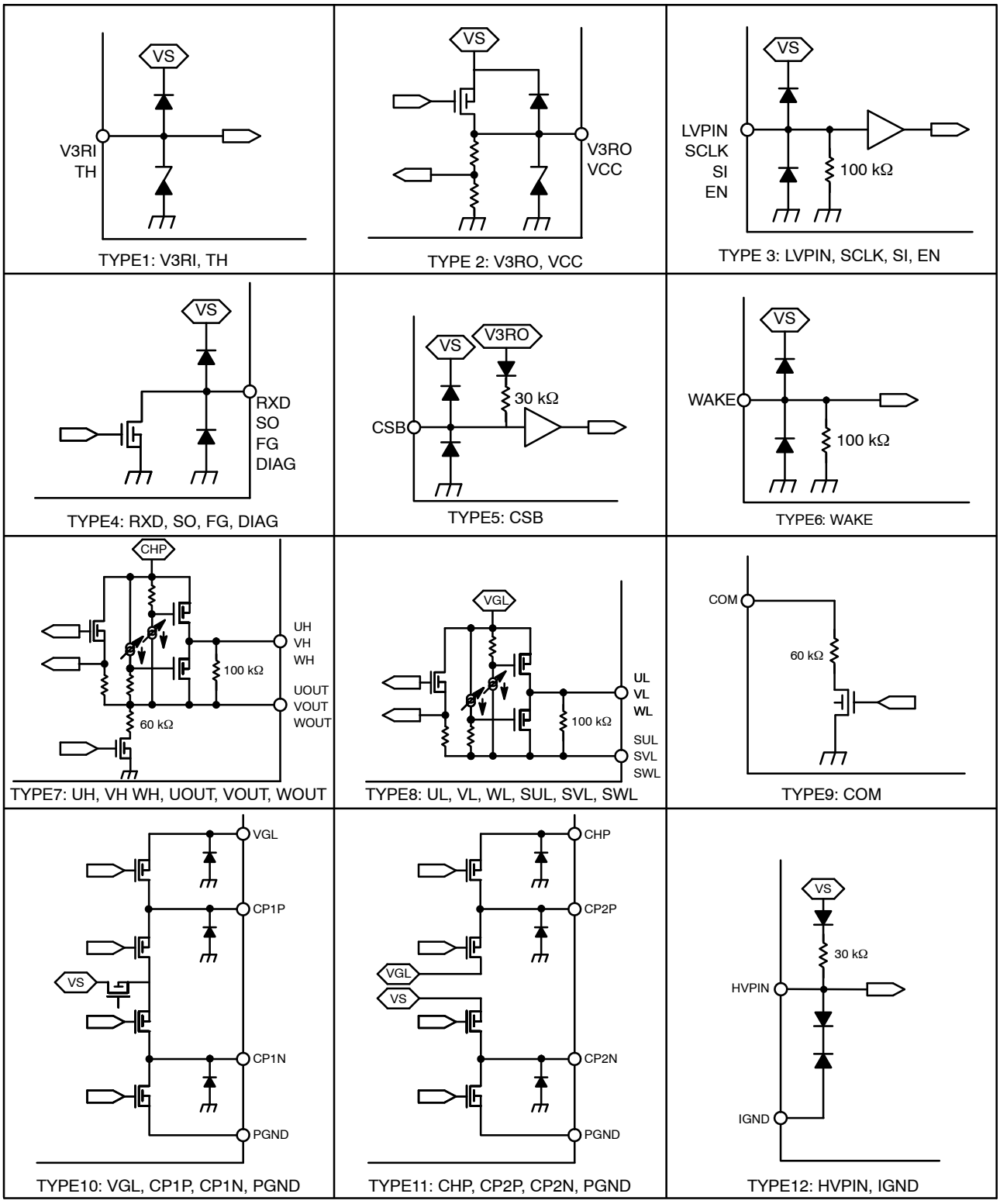

Figure 5. Pin Circuit

PIN CIRCUIT (continued)

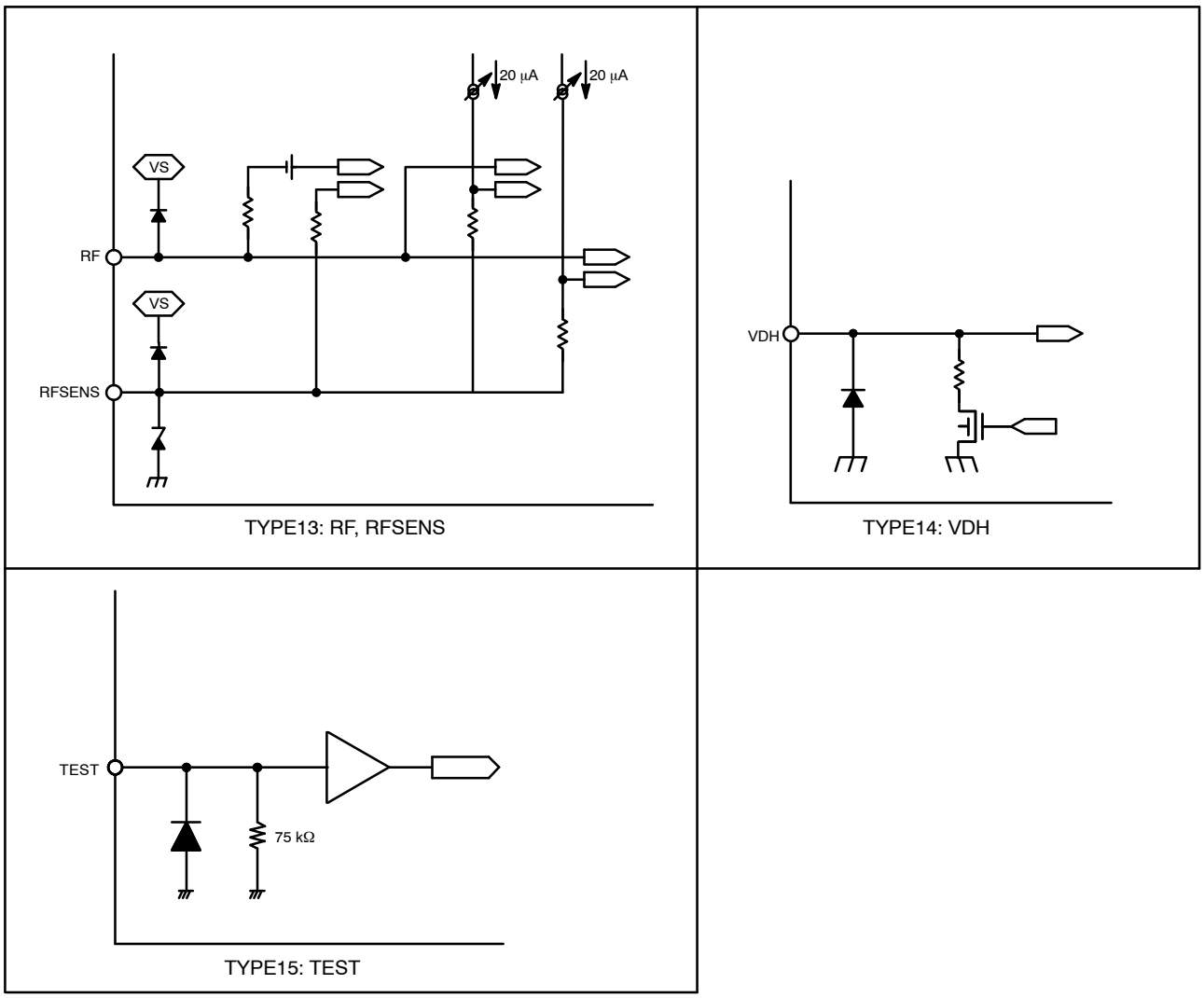

Figure 6. Pin Circuit (continued)

ABSOLUTE MAXIMUM RATINGS

Parameter	Pins	Ratings	Unit
Supply Voltage	VS	−0.3 to 40	V
Sense Input for Supply Voltage	VDH	−0.3 to 40	V
Charge Pump Voltage (High Side)	CHP	−0.3 to 40	V
Charge Pump Voltage (Low Side)	VGL	−0.3 to 16	V
Logic Power Supply	VR3I, VR3O	−0.3 to 3.6	V
5 V Regulator Voltage	VCC	−0.3 to 5.5	V
Digital I/O Voltage1	WAKE,EN	−0.3 to 40	V
Digital I/O Voltage2	CSB, SCLK, SI, LVPIN, TEST	−0.3 to 5.5	V
Digital Output Voltage	DIAG, FG, SO, RXD	−0.3 to 40	V
High Voltage PWMIN Voltage	HVPIN	−10 to 40	V
RF Input Voltage	RF	−3 to 3.6	V
RFSENS Input Voltage	RFSENS	−0.3 to 1.0	V
TH Input Voltage	TH	−0.3 to 3.6	V
Voltage Tolerance	UOUT, VOUT, WOUT, COM	−3 to 40	V
High−side Output	UH, VH, WH	−3 to 40	V
Low−side Output	UL, VL, WL	−3 to 16	V
Low−side Source Output Voltage	SUL, SVL, SWL	−3 to 3.6	V
Voltage between HS Gate and Phase	UH−UOUT,VH−VOUT,WH−WOUT	−0.3 to 40	V
Voltage between LS Gate and Source	UL−SUL, VL−SVL, WL−SWL	−0.3 to 16	V
Output Current	UH,VH,WH,UL,VL,WL pulsed (duty 5%)	50 400	mA
Open Drain Output Current	DIAG, FG, SO, RXD	10	mA
Thermal Resistance ($R_{\theta jA}$)	with Board (Note 1)	47	°C/W
ESD Human Body Model	AEC Q100−002	2	kV
ESD Charged Device Model	AEC Q100−011	750	V
Storage Temperature		−55 to 150	°C
Junction Temperature		−40 to 150	°C
	(Note 2)	150 to 175	°C

Stresses exceeding those listed in the Maximum Ratings table may damage the device. If any of these limits are exceeded, device functionality should not be assumed, damage may occur and reliability may be affected.

1. 76.2 × 114.3 × 1.6 mm, glass epoxy board.
2. Operation outside the Operating Junction temperature is not guaranteed. Operation above 150°C should not be considered without a written agreement from **onsemi** Engineering staff.

ELECTRICAL CHARACTERISTICS

(Valid at a junction temperature range from −40°C to 150°C, for supply Voltage 6.0 V ≤ VS ≤ 28 V. Typical values at 25°C and VS = 12 V unless specified otherwise)

Parameter	Symbol	Condition	Min	Typ	Max	Unit
Supply−voltage Range	VS	Normal mode	6	12	28	V
		Device fully functional	5.5	–	28	V
		Full logic functionality, driver stage off	4.5	–	40	V
Supply Current into VS	I_{s1}	V3RO = V3RI EN = L	–	15	25	mA
	Is_2	Sleep Mode	–	40	80	μA
Operational junction Temperature	Topj		−40	–	150	°C
OUTPUT BLOCK (UH, VH, WH, UL, VL, WL)						
Low−side Output On−resistance 1	RON(L1)	“L” level Io = 10mA	–	6	15	Ω
Low−side Output On−resistance 2	RON(L2)	“H” level Io = −10mA	–	12	22	Ω
High−side Output On−resistance 1	RON(H1)	“L” level Io = 10mA	–	6	15	Ω
High−side Output On−resistance 2	RON(H2)	“H” level Io = −10mA	–	12	22	Ω
DRIVE OUTPUT BLOCK (PWM BLOCK)						
Drive Output PWM Frequency	fPWMO		18.5	19.5	20.5	kHz
Output PWM Duty Cycle Resolution	ΔPWMDUTY	(Note 3)	–	–	0.1	%
3 V CONSTANT VOLTAGE OUTPUT						
Output Voltage	V3RO		3.135	3.3	3.465	V
Voltage Regulation	ΔV3R1	VS = 6.0 to 28 V	–	–	50	mV
Load Regulation	ΔV3REG2	Io = 5 mA to 25 mA	–	–	50	mV
Current Limit	IV3RO	Not for external loads > 5 mA	50	–	–	mA
VCC 5 V CONSTANT VOLTAGE OUTPUT						
Output Voltage	VC5RO	VS = 6.0 to 28 V	4.75	5.00	5.25	V
Voltage Regulation	ΔVC5R1	VS = 6.0 to 28 V	–	–	50	mV
Load Regulation	ΔVC5R2	Io = 5 mA to 25 mA	–	–	50	mV
Current Limit	IVCC5V		50	–	–	mA
VCC 3 V CONSTANT VOLTAGE OUTPUT						
Output Voltage	VC3RO		3.135	3.3	3.465	V
Voltage Regulation	ΔVC3R1	VS = 6.0 to 28 V	–	–	50	mV
Load Regulation	ΔVC3R2	Io = 5 mA to 25 mA	–	–	50	mV
Current Limit	IVCC3V3		50	–	–	mA
LOW−SIDE GATE VOLTAGE OUTPUT (VGL PIN)						
Low−side Output Voltage1	VGLH1	6.0 <VS ≤ 8.0 V Io = −10 mA	8.0	12.0	14.0	V
Low−side Output Voltage2	VGLH2	8.0 < VS ≤ 20 V Io = −10 mA	10.0	12.0	14.0	V
Low−side Output Voltage3	VGLH3	20 < VS ≤ 28V Io = −10mA	7.0	–	–	V

ELECTRICAL CHARACTERISTICS (continued)
(Valid at a junction temperature range from −40°C to 150°C, for supply Voltage 6.0 V ≤ VS ≤ 28 V. Typical values at 25°C and VS = 12 V unless specified otherwise)

Parameter	Symbol	Condition	Min	Typ	Max	Unit
HIGH−SIDE OUTPUT VOLTAGE (CHP PIN)						
Internal Charge Pump Oscillator frequency	FCP	SSCG = 0	49.6	52.1	54.6	kHz
Boost Voltage1	VGHH1	6.0 ≤ VS ≤ 8.0 V Io = −10 mA	VS +6.0	VS +12.0	VS +14.0	V
Boost Voltage2	VGHH2	8.0 < VS ≤ 20 V Io = −10 mA	Vs +9.0	VS +12.0	VS +14.0	V
Boost Voltage3	VGHH3	20 < VS ≤ 28 V Io = −10 mA	VS +6.0	−	−	V
CHP Voltage Limit	VCHPLIM	VS = 28 V	34	36.5	38	V
PWMIN INPUT PIN IN LOW FREQUENCY MODE						
Input PWM Frequency Range	fLPWM	PWMF = 0 Low frequency mode	5.3	−	1000	Hz
PWM Signal Timeout	TLPWMIN	PWMF = 0 Low frequency mode	−	210	220	ms
PWMIN INPUT PIN IN HIGH FREQUENCY MODE						
Input PWM Frequency Range	fHPWM	PWMF = 1 High frequency mode PWMINSEL=1 LVPIN is used for PWM input	5.3	−	18500	Hz
DIGITAL INPUT PIN (CSB)						
High level Input Voltage	VIH1		0.8×V3RO	−	−	V
Low level Input Voltage	VIL1		−	−	0.2×V3RO	V
Input Hysteresis Voltage	VIHYS1		0.1	0.35	0.6×V3RO	V
Pull−up Resistance	RDVI1		15	30	60	kΩ
DIGITAL INPUT PIN (SCLK, SI, LVPIN)						
High level Input Voltage	VIH2		0.8×V3RO	−	−	V
Low level Input Voltage	VIL2		−	−	0.2×V3RO	V
Input Hysteresis Voltage	VIHYS2		0.1	0.35	0.6×V3RO	V
Pull−down Resistance	RDVI2		50	100	200	kΩ
WAKE INPUT PIN						
High level Input Voltage	VIH3		2.5	−	−	V
Low level Input Voltage	VIL3		−	−	0.6	V
Internal Pull−down Resistance	RDVI3		50	100	200	kΩ
EN INPUT PIN						
High level Input Voltage	VIH4		0.8×V3RO	−	−	V
Low level Input Voltage	VIL4		−	−	0.2×V3RO	V
Input Hysteresis Voltage	VIHYS4		0.1	0.35	0.6×V3RO	V
Pull−down Resistance	RDVI4		50	100	200	kΩ
TEST INPUT PIN						
High level Input Voltage	VIH5		0.8×V3RO			V
Low level Input Voltage	VIL5				0.2×V3RO	V
Input Hysteresis Voltage	VIHYS5		0.1	0.35	0.6×V3RO	V
Pull−down Resistance	RDVI5		37.5	75	150	kΩ

ELECTRICAL CHARACTERISTICS (continued)
(Valid at a junction temperature range from −40°C to 150°C, for supply Voltage 6.0 V ≤ VS ≤ 28 V. Typical values at 25°C and VS = 12 V unless specified otherwise)

Parameter	Symbol	Condition	Min	Typ	Max	Unit
DIGITAL OUTPUT PIN (SO, FG, DIAG, RXD)						
Output Voltage	VOL	Io = 1 mA pull−up current	–	–	0.2	V
Output Leakage Current	ILOLK		–	–	10	μA
CURRENT LIMIT / OVERCURRENT PROTECTION (RF, RFSENS)						
Current Limit Voltage 1	VRF11	Voltage between RF and RFSENS, CLSEL = 0	40	50	60	mV
Current Limit Voltage 2	VRF12	Voltage between RF and RFSENS, CLSEL = 1	90	100	110	mV
Overcurrent Detection Voltage Threshold 1	VRF21	Voltage between RF and RFSENS, OCSEL = 00 The difference voltage between VRF21 and the actual current limit voltage	15	25	35	mV
Overcurrent Detection Voltage Threshold 2	VRF22	Voltage between RF and RFSENS, OCSEL = 01 The difference voltage between VRF22 and the actual current limit voltage	40	50	60	mV
Overcurrent Detection Voltage Threshold 3	VRF23	Voltage between RF and RFSENS, OCSEL = 10 The difference voltage between VRF23 and the actual current limit voltage	65	75	85	mV
Overcurrent Detection Voltage Threshold 4	VRF24	Voltage between RF and RFSENS, OCSEL = 11 The difference voltage between VRF24 and the actual current limit voltage	90	100	110	mV
EXTERNAL THERMAL PROTECTION (TH)						
Threshold Voltage Falling	VTH0 VTH1 VTH2 VTH3	THTH[1:0] = 00 THTH[1:0] = 01 THTH[1:0] = 10 THTH[1:0] = 11	Typ −35	350 300 250 200	Typ +35	mV
Hysteresis Range	VTHHYS		25	50	75	mV
THERMAL PROTECTION						
Thermal Warning Temperature	 TTW0 TTW1	(Junction Temperature) (Note 3) TSTS = 0 TSTS = 1	 125 150	–	–	°C
Thermal Warning Temperature Hysteresis	TTWHYS	(Junction Temperature) (Note 3)	–	25	–	°C
Thermal Shutdown Temperature	 TTSD0 TTSD1	(Junction Temperature) (Note 3) TSTS = 0 TSTS = 1	 150 175	–	–	°C
Thermal Shutdown Temperature Hysteresis	TTSDHYS	(Junction Temperature) (Note 3)		25	–	°C
VOLTAGE MONITORING (VS, CHP, VGL, VCC)						
VS Undervoltage Detection	VSLV		4.8	–	5.1	V
VS Undervoltage Detection Hysteresis	VSLVHYS		0.1	0.25	0.4	V
VS Overvoltage Detection	VSHV		30.5	–	35.5	V
Overvoltage Detection Hysteresis	VSHVHYS		1.5	2.0	2.5	V

ELECTRICAL CHARACTERISTICS (continued)
(Valid at a junction temperature range from −40°C to 150°C, for supply Voltage 6.0 V ≤ VS ≤ 28 V. Typical values at 25°C and VS = 12 V unless specified otherwise)

Parameter	Symbol	Condition	Min	Typ	Max	Unit
VOLTAGE MONITORING (VS, CHP, VGL, VCC)						
VDH Overvoltage Detection	VDHHV		30.5	–	35.5	V
VDH Overvoltage Detection Hysteresis	VDHHVHYS		1.5	2.0	2.5	V
CHP Undervoltage Detection	CHPLV		VS+4.5	–	VS+5.5	V
CHP undervoltage Detection Hysteresis	CHPLVHYS		0.2	0.4	0.7	V
VGL Undervoltage Detection	VGLLV		4.5	–	5.5	V
VGL Undervoltage Detection Hysteresis	VGLLVHYS		0.2	0.4	0.7	V
VCC3.3 Undervoltage Detection	VCLV3	REGSEL = 0, VCEN = 1, VCLVPO = 0	2.3	–	2.7	V
VCC3.3 Undervoltage Detection Hysteresis	VCLVHYS3	REGSEL = 0, VCLVPO = 0	0.1	0.25	0.4	V
VCC5.0 Undervoltage Detection	VCLV5	REGSEL = 1, VCEN = 1, VCLVPO = 0	3.8	–	4.2	V
VCC5.0 Undervoltage Detection Hysteresis	VCLVHYS5	REGSEL = 1, VCLVPO = 0	0.1	0.25	0.4	V
HVPIN PIN						
Internal Pull−up Resistance	RI5		15	30	60	kΩ
High Level Input Voltage	VIH5		0.6×VS	–	VS	V
Low Level Input Voltage	VIL5		0	–	0.4×VS	V
Input Hysteresis Voltage	VIHYS5		0.05×VS	–	0.2×VS	V

Product parametric performance is indicated in the Electrical Characteristics for the listed test conditions, unless otherwise noted. Product performance may not be indicated by the Electrical Characteristics if operated under different conditions.
3. Not tested in production. Guaranteed by design.

DETAILED FUNCTIONAL DESCRIPTION

The LV8961H integrates full sensorless brushless DC motor commutation and Proportional/Integral (PI) speed control. A robust startup algorithm combined with OTP registers for important system parameters make this IC a solution of choice for many BLDC applications which need to turn a motor in one direction only such as pumps, fans, etc.

Building a BLDC application with the LV8961H is even simpler than building a DC motor. Only a PWM pulse train is necessary to control the motor – either directly or via speed control. Switch−only applications are also possible. Speed and error information can be fed back to the control unit via FG and DIAG outputs.

If more complex operation and flexibility are required the LV8961H can be combined with a small microcontroller. The LV8961H implements motor commutation and includes all necessary support circuitry for the microcontroller such as:

- 5 V / 3.3 V Power supply
- Integrated watchdog timer
- External Temperature Sensor

In case of system errors such as a missing control signal, or a watchdog error, the LV8961H includes auto−run settings. If one of those errors occur and connection to the microcontroller is lost, the motor can continue running at a predefined fixed duty cycle of 25%, 50%, 75% or 100% and TAG_L or TAG_H.

Motor Commutation

Motor position is detected using the BEMF of the un−driven phase of a rotating three−phase motor relative to its neutral point connected to COM. BEMF monitoring can be detected at 2 points in each phase of U/V/WOUT, and there are 6 zero−crossing signal in 3 phase in total with 6 un−driven windows. Once an adequate BEMF level has been detected voltages applied via PWM to the other two phases of the motor maintain rotation. The digital equivalent of the BEMF signal appears at FG.

Two different PWM patterns can be selected via register SLMD to match motors with trapezoidal or sinusoidal BEMF.

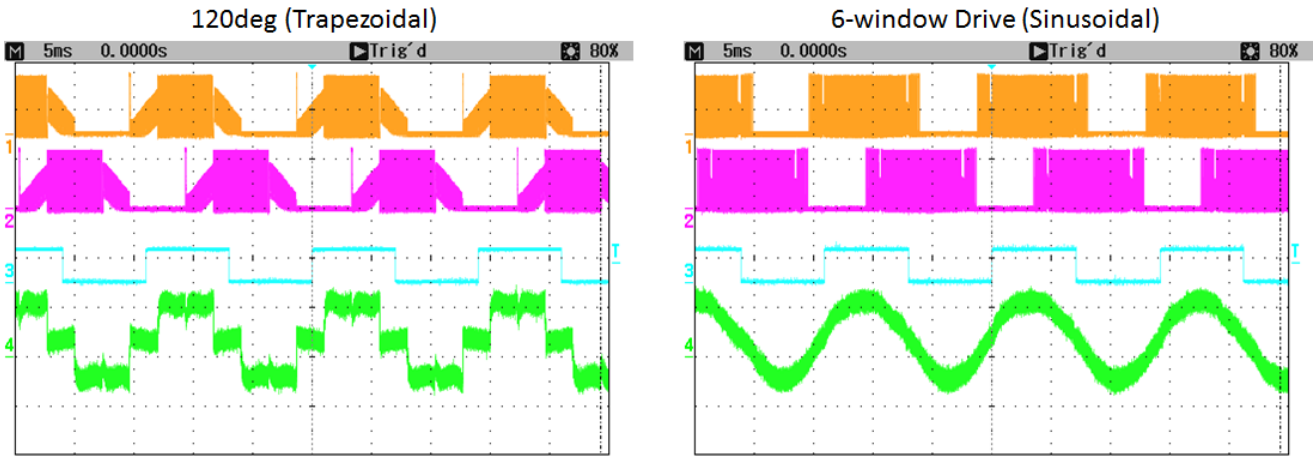

Figure 7. Trapezoidal vs. Sinusoidal Drive
(CH1, 2 = U, V Phase Voltage, CH3 = FG, CH4 = U Phase Current)

With sinusoidal drive, each phase is driven with 6 windows for BEMF monitoring. This results in sinusoidal drive current with lower total harmonic distortion, reducing both torque ripple and noise. Trapezoidal drive results in a higher voltage across the motor phases and may be preferable for high torque and high speed operation.

Rotor Position Detection

The rotor position is detected with BEMF zero−cross timing. To detect the BEMF, the short window is opened by making the phase current zero or the phase float. Four types of the window mode are provided.

- 6−window mode
  All zero−crossings (rising and falling) for all three phases will be detected by opening 6 windows per electrical cycle. This offers increased robustness at the expense of increased current waveform distortion. At the startup, this 6−window mode is automatically selected.
- 3−window mode
  One rising zero−crossing for each phase will be detected by opening 3 windows per electrical cycle. The same waveform is applied to the three phases.
- 1−window mode
  One rising zero−crossing in phase U will be detected by opening a window only in phase U. Therefore, the current waveform distortion will be minimized for the other phases.

- 2−window mode
  A rising− and a falling zero−crossing in phase U will be detected by opening 2 windows per electrical cycle only in phase U.

BEMF Window Timing

Figure 8 shows a timing chart of the BEMF window with simplified phase voltage and current waveform illustrations.

In this example (3−window mode), we will introduce two important timing parameters: MSKRSTNUM0 and MSKRSTNUM1:

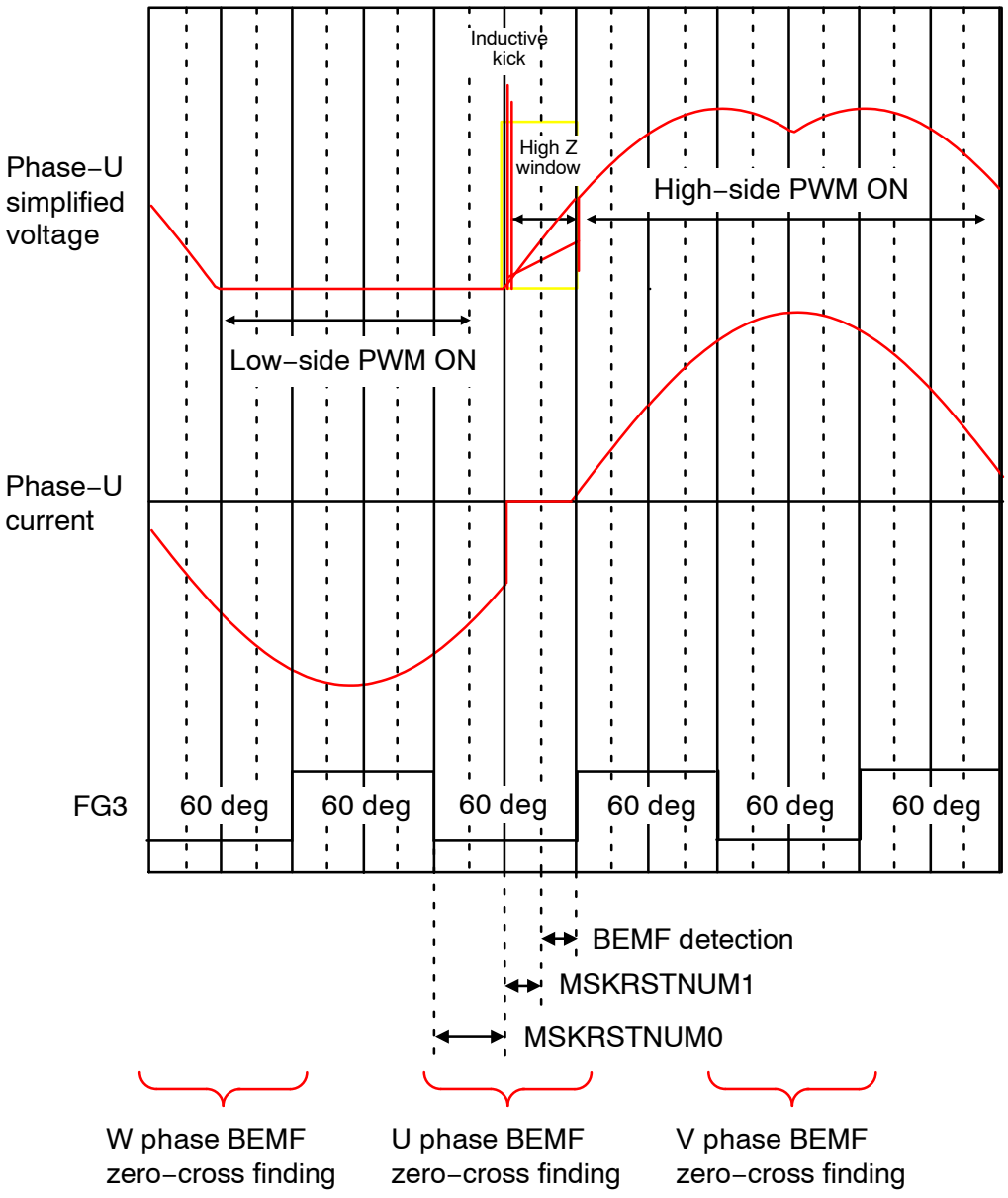

Figure 8. BEMF Window Timing Parameters

(1) MSKRSTNUM0_***

Where, *** is ONE (for 1−window mode), TWO (for 2−window mode), THR (for 3−window mode), SIX (for 6−window mode), or INI (for startup 6−window mode).

MSKRSTNUM0 defines the time from the beginning of the BEMF detection window (reserved for that phase) until the moment where the phase output turns off (= start of the HiZ window).

MSKRSTNUM0_THR[3:0] = x
x < 8 → (15 + x * 3.75) deg
x ≥ 8 → (41.25 + (x – 7) * 1.875) deg

Example:
x = 4 → (15 + x * 3.75) deg → (15 + 4 * 3.75) deg = 30 deg

(2) MSKRSTNUM1_***

Where, *** is ONE (for 1−window mode), TWO (for 2−window mode), THR (for 3−window mode), SIX (for 6−window mode), or INI (for startup 6−window mode).

MSKRSTNUM1 is a blanking (or ignoring) period from the start of the Hiz window defined by MSKRSTNUM0 until BEMF sensing. This blanking time prevents faulty zero−cross detection due to the flyback caused by the window opening.

MSKRSTNUM1_THR[3:0] = x
((x +1) + 1.875) deg

Example:
x = 2 → ((x +1) + 1.875) deg → ((2 +1) + 1.875) deg = 5.625 deg

These window parameters are used commonly with the sinusoidal waveform shaping mode and trapezoidal waveform shaping mode.

Table 1.

WINDSEL	The Number of Window		Window Timing Parameters
	SLMD = L Trapezoidal	SLMD = H Sinusoidal	
0	6	6	MSKRSTNUM1_SIX MSKRSTNUM0_SIX
1	6	3	MSKRSTNUM1_THR MSKRSTNUM0_THR
2	6	2	MSKRSTNUM1_TWO MSKRSTNUM0_TWO
3	6	1	MSKRSTNUM1_ONE MSKRSTNUM0_ONE

Maximum Motor Speed

The maximum physical motor speed of the application is limited by the internal clock to approximately 48000 electrical RPM. If this is exceeded the LV8961H coasts the motor until BEMF detection and drive can resume.

Lead Angle Setting

LV8961H can adjust the lead angle according to the output Duty as depicted in Figure 9. It is set by the registers LASET_L, LASET_H and LASET_LIM.

LASET_L sets lead angle when the output duty is 0%, and LASET_H sets lead angle when the output duty is 100%.

And then LASET_LIM sets the upper limit when an application requires it.

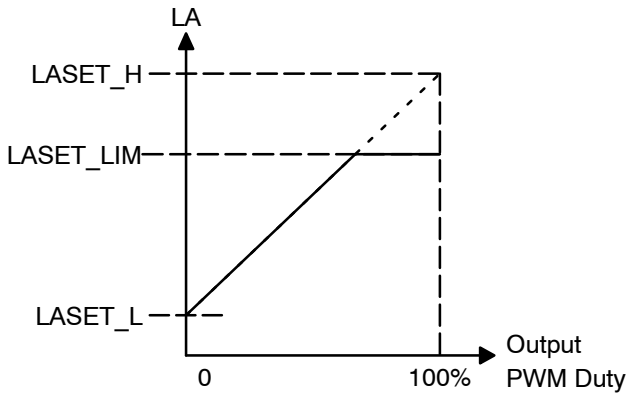

Figure 9. Lead Angle adjustment

Motor Startup

BEMF is used for rotor position sensing but for BEMF generation the motor has to be rotating. A stopped motor will initially be driven open−loop until BEMF can be detected.

Open−loop operation is motor parameter dependent. The most critical parameters depend on load and motor inertia: initial commutation frequency and PWM duty cycle (which affects motor flux density).

In the LV8961H, the initial commutation frequency is programmed with register STOSC. Flux density is regulated by limiting startup current with a current ramp. During this ramp the current limit is increased in 16 steps from 0 to the maximum current defined by the external shunt. The ramp time from 102 ms to 6.55 s is defined in register SSTT. Register CLREFEN_STOP allows to disable the current ramp if necessary.

Fixed motor speed will be applied until either a valid BEMF has been detected in all three phases or the startup timer expires.

Motor Lock

This timer begins after the end of the current ramp and can be programmed from 400 ms to 6.4 s in register CPTM. If the timer expires a locked rotor error is flagged. In automatic retry mode, the LV8961H will restart after standby mode for time of eight times of CPTM.

Motor Connect Open Detection

When the motor cannot be started for a certain period of time and it is in the startup mode, this IC flows current to each coil, then determines IC is in a constraint state when current flows, or an open state when no current flows. The detection time for the current to flow can be selected by OPDTM register.

Spin−up of Rotating Motors

The LV8961H can perform freewheeling detection before applying the open−loop spin−up algorithm described above. If the motor is already turning in the right direction the IC will continue with closed−loop commutation. If the motor is turning in the wrong direction, the IC will wait for the motor to stop and then perform open−loop startup.

There are two scenarios where this behavior might not be desirable:

1. Fast Startup is required
   Freewheeling detection takes up to one electrical revolution of the motor, which may be inacceptable for some applications. In this case freewheeling detection can be disabled by setting FRREN
2. Windmilling backwards
   Should the motor be driven by some external force as it is freewheeling in the wrong direction the LV8961H will potentially wait forever. Should startup under these conditions be required, freewheeling detection must be disabled as well

Chip Activation, Shutdown and System States

After power up of VS and WAKE above 2.5 V the LV8961H wakes up. Standby mode is entered after VS has exceeded 5.5 V (min.).

A high level on WAKE activates the IC from sleep mode which enables the internal linear regulator at V3RO. Once the voltage on V3RO as sensed on V3RI has passed the power on reset (POR) threshold the system oscillator starts, and after 32 counts of the system clock (1.6 μs typical) releases the internal digital reset which simultaneously starts the external regulator VCC and the charge pump, and loads the system register contents from OTP into the internal registers. During the entire wake−up sequence of 8 ms (typ.) DIAG is masked for charge pump and VCC undervoltage. After wake−up is complete, the IC enters Standby mode and DIAG is activated to display internal errors. During Standby mode full SPI access is possible.

A high on EN takes the LV8961H from Standby to Normal mode. Normal mode allows motor control and SPI access is limited. A low on EN disables the motor stage regardless of the PWM input and returns the part back to Standby mode.

The IC is shut down by taking WAKE to low level. WAKE has priority over the state of EN, if EN hold functionality is desired; it needs to be implemented with an external diode from EN to WAKE.

System States

LV8961H has three operating modes. The operating modes are controlled by WAKE and EN.

Sleep Mode

Sleep mode is a power saving mode. All circuits are powered down, charge pump is inactive and the SPI port is unusable. Activating WAKE allows the transition from the sleep mode to either Standby or Normal mode.

Standby Mode

In Standby mode the OTP content has been transferred into the main registers. In this mode all outputs are turned off. Any internal writable register that is not locked can be configured by SPI interface.

Normal Mode

In normal mode, outputs can be controlled and all blocks are active. All registers can be read through the SPI interface.

Mode	WAKE	EN	Internal Bias	Logic	VCC	Charge Pump	Drivers
Sleep	L	x	Disable	Reset	Disable	Disable	High−Z
Standby	H	L	Enable	Active	Enable	Enable	Low
Normal	H	H	Enable	Active	Enable	Enable	Enable

Supply Voltage Transients

The LV8961H is well suited to operate during typical automotive transients. It is fully functional during start−stop transients, as it maintains all specified parameters for supply voltages from 6 V < VS < 28 V. If the supply voltage falls below 5 V, for example during cold cranking, undervoltage error is flagged, but digital functionality is maintained until the internal regulator falls below its undervoltage lockout level of 2.2 V. The VCC regulator must be configured for 3.3 V if low transient operation is desired.

If overvoltage protection is enabled in MRCONF8 an overvoltage error is indicated if the supply rises beyond 28 V(min). In both under− and overvoltage error modes, the power stage drivers UH, VH, WH and UL, VL, and WL go low, turning the external power stage high impedance and letting the motor freewheel. The LV8961H will re−engage the motor after conditions have returned to normal.

System Power Supplies

Three power supplies are integrated into the LV8961H:

- An internal 3.3 V regulator provides power to the digital and interface section
- The VCC regulator can be configured to provide 5 V or 3.3 V to an external processor and other loads

- A two−stage charge pump allows 100% duty cycle operation and maintains full enhancement to the power stage at low input voltages

Internal Regulator V3RO, V3RI

The internal regulator is supplied from VS and provides 3.3 V at V3RO. V3RI is connected to the power supply inputs of the control− and logic circuit blocks. V3RO and V3RI need to be connected externally and decoupled to the GND plane for stability. V3RO should not be connected to external loads.

VCC Regulator

The VCC regulator may power external loads, VCC becomes active during Standby mode and can be configured via register REGSEL to provide 5 V or 3.3 V. WARNING: the microcontroller can be damaged if the wrong REGSEL value is selected. Undervoltage error is flagged if the output voltage drops below VCLV5 in 5 V operation, or VCLV3 in 3.3 V operation.

The VCC regulator can be enabled or disabled with register VCEN.

Charge Pump Circuit for CHP and VGL

LV8961H has an integrated charge pump circuit for low−side and high−side predriver supply. Low−side drive voltage at VGL is 12 V(typ.) and high−side drive voltage at CHP is VS + 12 V(typ.). For functionality see Figure 10.

Undervoltage protection for the low−side drivers activates if VGL falls below VGLLV in which case the output FET's will be turned off and VGL undervoltage error is flagged in register MRDIAG. Overvoltage protection for the high−side drivers activates if VS becomes greater than 28 V(min). In that event the driver stage is disabled, overvoltage error is flagged in register MRDIAG, and both VGL and CHP are discharged to prevent output circuit destruction.

The charge pump circuit operates nominally at 52.1 kHz. A SSCG function is provided to add a spread−spectrum component for EMI reduction.

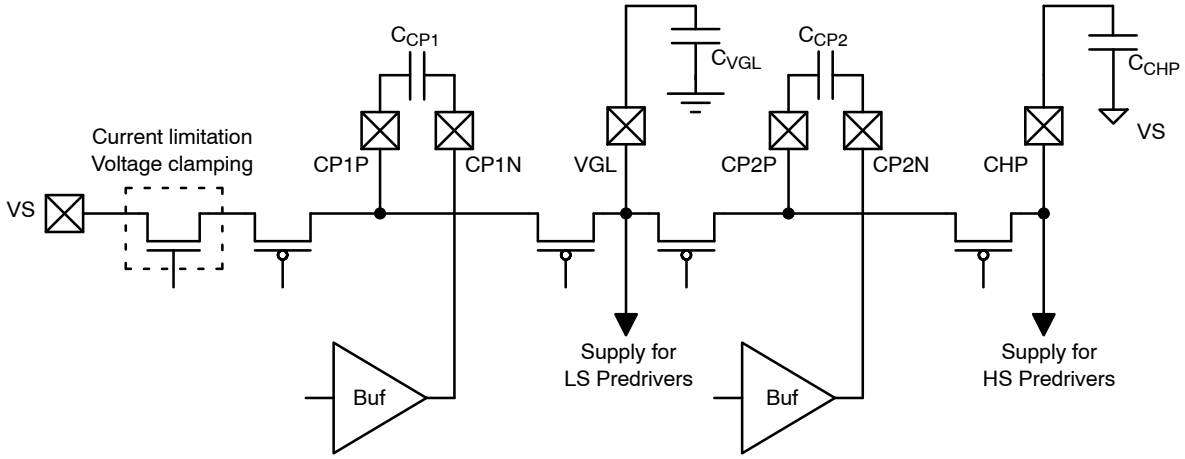

Figure 10. Charge Pump Circuit

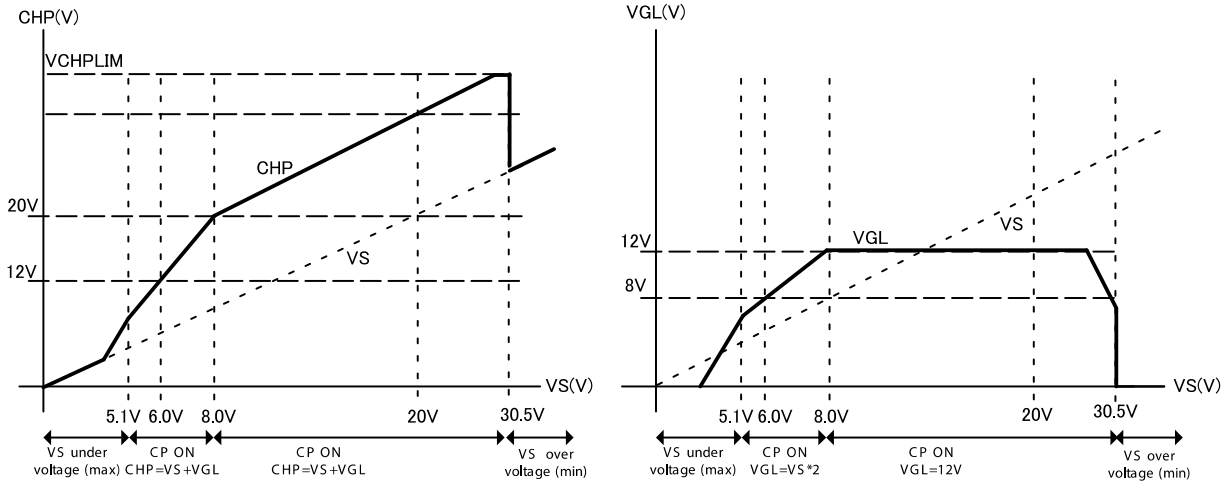

Figure 11. High−Side and Low−Side Gate Voltages

INPUT PWM and SPEED CONTROL

The LV8961H provides three speed control methods through the input PWM signal:

1. Indirect PWM translation
2. Closed−loop speed control
3. Direct register command

Indirect PWM Translation

This is the preferred mode for stand−alone operation. The frequency range has two modes, high and low frequency. In the high frequency mode, it corresponds to frequency input up to 18.5 kHz. In the low frequency mode, it is limited to the frequency input up to 1 kHz, and when the frequency input is above 1 kHz, it is ignored. Frequency mode can be configured in high frequency mode by setting register PWMF to 1. In both modes the input PWM signal is compared against minimum PWM frequency thresholds to allow for more robust operation. Frequencies below 5.3 Hz (typ.) are considered as 0% or 100% duty cycle (no frequency).

The duty cycle of the PWM input signal is measured with a resolution of 10 bits. There is an inherent delay to detect and utilize this duty cycle information. It is the delay time from input PWM input signal to output PWM. The delay time is determined by

$$T_{PWM} + 19.8\ \mu s\ (max.)$$

Where, T_{PWM} is the period of the PWM input signal. 19.8 μs is fixed value.

If faster startup is necessary, see section "Fast Startup" below. If no frequency is detected after 210ms (typ.) the PWMPO flag is set in system warning register MRDIAG1. Even without PWM input the LV8961H can run as described below in section "Fast Startup".

If a valid frequency was detected, the LV8961H evaluates the input duty cycle and translates it into an output duty cycle as shown in Figure 12. The output PWM frequency is fixed to 19.5 kHz (typ.).

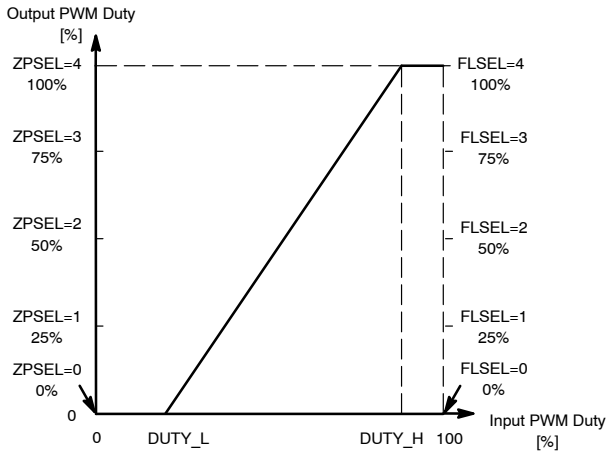

Figure 12. Duty Cycle Translation

Input duty cycles lower than the minimum Duty setting by DUTY_L register are considered a motor−off command and will also reset the error registers. Input duty cycles higher than the maximum Duty setting by DUTY_H register are considered a full drive command. Input to output duty cycle translation is described by the following formula:

	0	$0 \le d_{IN} \le$ DUTY_L
$d_{OUT} =$	$\frac{100}{DUTY_H - DUTY_L} \times (d_{IN} - DUTY_L)$	DUTY_L < d_{IN} < DUTY_H
	100	DUTY_H $\le d_{IN} \le$ 100

Closed−loop Speed Control

For stand−alone operation, the LV8961H offers a PI controller for motor speed which is activated by clearing bit SCEN. Frequencies below 5.3 Hz(typ.) are considered as 0% or 100% duty cycle (no frequency). The output PWM frequency is fixed to 19.5 kHz (typ.).

LV8961H provides Linear characteristic target speed setting as shown in Figure 13.

Direct Register Command

LV8961H allows user to access the register directly, which is connected to the control logic, and set the PWM duty cycle command from the PWMDTIN register. This mode can be configured by setting register SPIINSEL to 1. Also, FG frequency information can be obtained from the STATUS register by setting register STATSEL to 0h, and It can minimize delay that occurs when the PWM frequency is low.

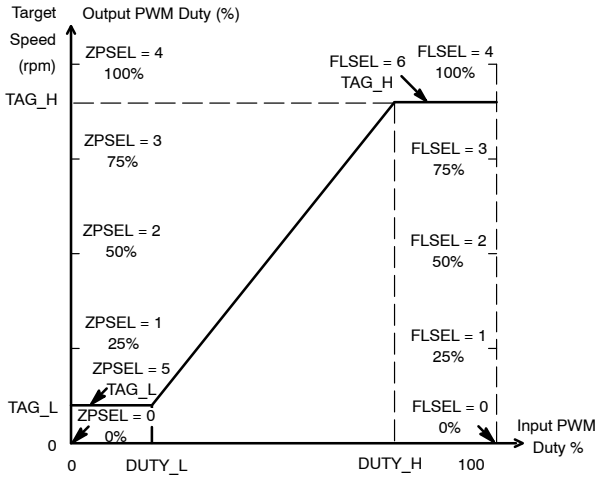

Figure 13. Target Speed by Input PWM Duty Cycle

The Control Algorithm

The LV8961H controls the motor speed by comparing the selected target speed to the actual motor speed and incorporating a PI controller with configurable gains for the P, I and T components which are stored in register MRSPCT7, MRSPCT8 and MRSPCT9 respectively.

Ramping of Speed Control Values

While tight control is required for optimal speed tracking, it may be undesirable during large input changes as it may

lead to sudden supply loading, increasing noise and motor wear. To limit the slope of the control signal, register USTEPSEL and DSTEPSEL imposes a ramp on an input step to slew the speed response of the motor.

Decreasing motor speed too fast results in energy recuperation back into the system. To limit overvoltage during energy recuperation, the variable DWNSET allows to prevent energy recuperation entirely by switching the synchronous rectification off.

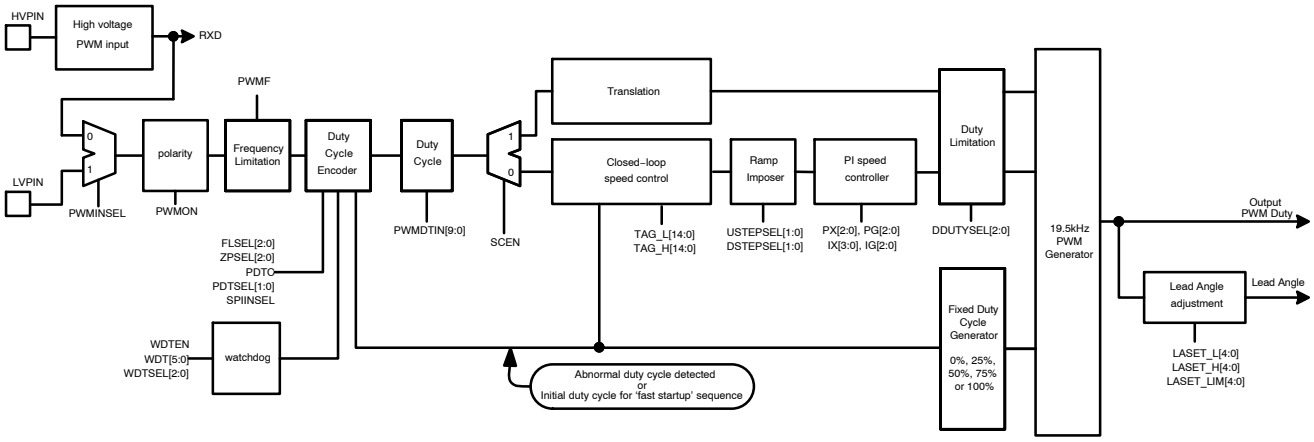

Figure 14. PWM Command Flow and Related Registers

Fast Startup

It may be desirable to have the motor start immediately after EN goes high and not wait for PWM input duty cycle evaluation. Two register settings enable motor operation during this evaluation time: bit PDTC determines if the motor should be running during this time at all, and PDTSEL selects a motor duty cycle of 25, 50, 75 or 100%. This is used as the initial value of the duty cycle command for the closed−loop speed control mode. To guarantee smooth transition from fast startup to PWM operation it is important to apply a comparable external PWM duty cycle at startup.

Abnormal Duty Cycle Operation (100% or 0%)

For normal duty cycle controlled operation the PWM signal is expected to have a frequency between 5.3 Hz or more. If no frequency is detected, the LV8961H will flag PWMPO error and enter 0% or 100% duty cycle mode depending on the level of the PWM signal (all low or all high). Operation during this mode can be selected to be either no motor operation, or motor operation at a fixed motor duty cycle of 25, 50, 75 or 100% and TAG_L or TAG_H as defined by the variables FLSEL or ZPSEL. These PWM values do not enter into the speed control loop.

Limit the Amount of Change of Output Duty

The register DDUTYSEL allows to limit the amount of change in output duty to avoid sudden acceleration and deceleration.

Speed Feedback FG

The motor speed is shown at open drain output FG where the transitions are direct representations of the BEMF signal transitions on the motor. The relationship between motor rotation and FG pulses is defined in register FGOF.

Fault Output DIAG

A low on open drain output DIAG indicates a system fault and a shutdown of the driver stage. Per default all system faults self−recover when the fault condition is removed. For some potentially destructive faults such as overcurrent, FET short−circuit and locked rotor conditions, it is possible to latch the fault condition. For more information on system diagnostics see section “System Errors and Warnings”.

High Voltage PWM Interface

The PWM interface translates a VS level signal with a threshold of 50%(Typ) VS to a digital signal appearing at RXD pin. This signal can be used for input PWM translation from outside units to the microcontroller.

Predriver Circuit

The predriver circuit of the LV8961H includes 3 half−bridge drivers which control external NFETs for the motor phases U, V and W. The high−side drivers UH, VH, WH switch their gate connection either to CHP or the respective phase connection UOUT, VOUT and WOUT. The low−side drivers are switched from VGL to the corresponding source connection SUL, SVL, SWL. Both high− and low−side switches are not current controlled. Slope control has to be implemented with external components.

Current shoot through protection of the bridge drivers is implemented by a dead time counter that delays the turning−on of the complementary switch. The dead time can be programmed from 200 ns < t_{FDTI} < 6.4 µs into 5bit parameter FDTI.

To protect against external shorts the drain−source voltage of the active external Power FETs is monitored as well. 4 bit register FSCDL selects a short−circuit shutoff voltage 100 mV < V_{FSCLD} < 1.6 V. To suppress false triggering during the rising edge of FET activation, FSCDT selects the masking time.

Current Limit and Overcurrent Shutoff

An integrated current sense amplifier implements current limiting and overcurrent shutoff by measuring the motor phase current across a single shunt between RF and RFSENS.

Figure 15 shows a summary of the current limit and the overcurrent shutoff, and the descriptions for each function are in the following sections.

In Sleep mode, the high− and low−side gate outputs of each U, V, W phase become High Z.

A 100 KΩ pull−down resistor is built−in between UH and UOUT of the high−side predriver output so that the gate and source of the external FET do not become High Z.

The low−side output also has a built−in 100 kΩ pull−down resistor between the UL and SUL terminals (similar for V and W phases).

An external resistor (typ. 100 kΩ) is visible in the application circuit between the gate and source of the FET.

Cycle−by−cycle Current Limit

If the voltage between RF and RFSENS exceeds VRF1, the active bridge is turned off until the next PWM period. VRF1 can be selectable 100 mV(Typ) or 50 mV(Typ) by register CLSEL. To suppress switching transients a current limit blanking time 0.2 μs < t_{CLMASK} < 3.2 μs can be programmed into register CLMASK.

During soft start this current limit is ramped from 0 to VRF1 in 16 steps during a programmable time 102 ms < t_{SSTT} < 6.55 s as defined in register SSTT.

Overcurrent Shutoff

If the bit OCPEN is set and the voltage between RF and RFSENS exceeds VRF2, the LV8961H goes into overcurrent shutoff and all predrivers are driving low turning the power FETs high impedance. VRF2 can be selectable VRF1 + 25 mV, +50 mV, +75 mV and +100 mV by register OCSEL. To suppress switching transients an overcurrent shutoff blanking time 0.2 μs < t_{OCMASK} < 3.2 μs can be programmed into register OCMASK.

Table 2. SUMMARY OF POWER STAGE PROTECTIONS

Current	Purpose	Flag	Sense point	Threshold	Turn−off	Recovery
Cycle−by−cycle	Limiter	CLDO	Sense Resistor VRF	VRF1 100 mV or 50 mV	PWM FET	Next PWM cycle
Short to VS	Protector	OCPO	Sense Resistor VRF	VRF1+25 mV, +50 mV, +75 mV and 100 mV	All FET	50 ms later
		FSPO	FET VDS MOUT−SXL	Configurable		
Short to GND	Protector	FSPO	FET VDS VDH−MOUT	Configurable	All FET	50 ms later

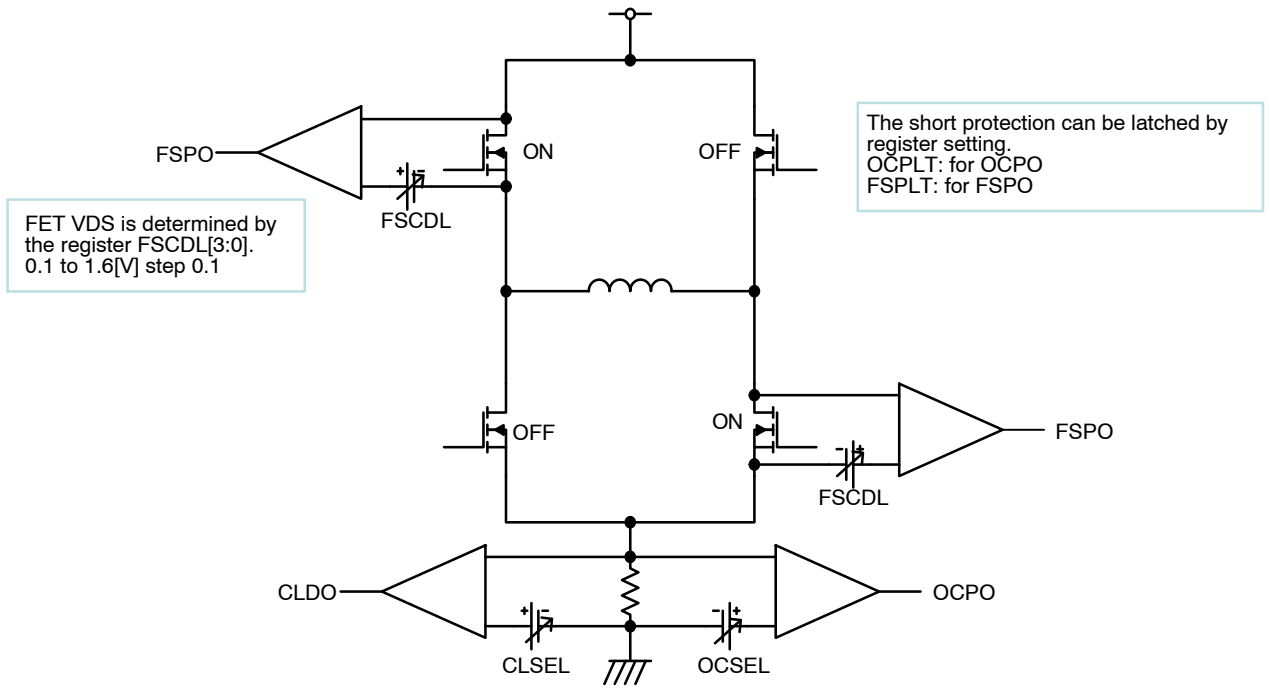

Figure 15. Current Limit vs. Overcurrent Shutoff

Temperature Sensing

The LV8961H measures the die temperature and implements internal thermal warning and shutoff. It is also possible to protect external devices by monitoring the voltage at pin TH. Internal and external overtemperature can shut down the driver section.

Internal Overtemperature Measurement

A thermal warning is issued if the internal temperature of the device reaches approximately 25°C below the overtemperature shutoff level. The shutoff level is selected by bit TSTS as 150°C or 175°C(min).

External Overtemperature Shutoff

An analog comparator triggers external overtemperature error if the voltage at pin TH falls below the two bit programmable level 0.2 V < V_{THTH} < 0.35 V as defined by register THTH. For external temperature measurement connect a resistor between V3RO and TH and an NTC between TH and AGND. The programmed threshold voltage at V_{THTH} should be reached at the intended thermal shutdown temperature of the external component to be protected. During the overtemperature condition, the predrivers are disabled and a flag, THPO in MRDIAG0 is set.

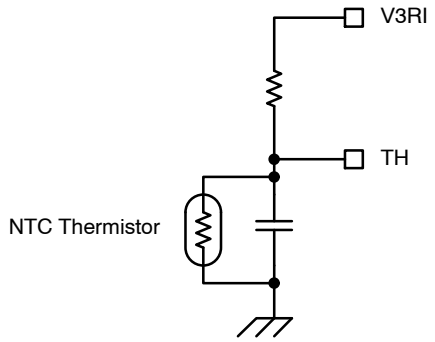

Figure 16. Example Circuit for External Temperature Sensing

Watchdog Operation

The LV8961H includes a watchdog timer to monitor a companion microcontroller and disable the motor if the microcontroller stops working properly. Bit WDTEN enables and disables the watchdog timer. Access to this bit can be blocked – see section “OTP Register” for details. The enabled watchdog will issue an error whenever the watchdog time 1.6 ms < t_{WDT} < 102.4 ms expires. A write of 00h to register MRRST resets the watchdog timer.

A watchdog timeout can result in either a motor stop, or motor operation at four predefined duty cycles of 25%, 50%, 75% or 100% and TAG_L or TAG_H as defined by WDTSEL. The duty cycle is directly applied to the power stage, not through the speed selection registers. The microprocessor is not reset.

System Errors and Warnings

All system errors and most warnings cause a transition on DIAG. The polarity of this transition can be selected in bit DIAGSEL. The ability of stand−alone applications without microcontroller to react to errors and warnings is limited. For this case various auto−retry strategies are implemented.

If a companion microcontroller exists, more complex error handling is possible and DIAG should be connected to an interrupt input of the microcontroller. Errors that may cause serious damage such as short−circuit, overcurrent and locked rotor can be latched by enabling the corresponding latch bit in MRCONF9. In this case the LV8961H will keep the output stage disabled until the latch is cleared by one of the following actions:

- Power on reset
- EN low
- Input the output duty 0% or 0 rpm command
- SPI write of FFh to MRRST

If bit DLTO is set ONLY latched errors will cause a transition of DIAG. To detect the other less serious errors and warnings, the diagnostic registers MRDIAG0 /MRDIAG1/MRDIAG2 have to be read regularly via SPI access.

Table 3. ERROR AND WARNING DIAGNOSTIC REGISTER (Note 4)

ADDR	Bit	Error	Description	Enabled Set	Latched Set	Self−Recovery Timing
0201h	0	OCPO	Overcurrent Error	OCPEN	OCPLT	After 50 ms (typ.) the motor will restart
0201h	1	VSLVPO	VS Undervoltage	N/A	N/A	Motor is restarted when voltage recovers
0201h	2	VSOVPO	VS Overvoltage	OVPEN	N/A	Motor is restarted when voltage recovers
0201h	3	CHPLVPO	CHP Undervoltage	N/A	N/A	Motor is restarted when voltage recovers
0201h	4	VGLLVPO	VGL Undervoltage	N/A	N/A	Motor is restarted when voltage recovers

Table 3. ERROR AND WARNING DIAGNOSTIC REGISTER (Note 4) (continued)

ADDR	Bit	Error	Description	Enabled Set	Latched Set	Self−Recovery Timing
0201h	5	FSPO	FET Short−Circuit	FSPEN	FSPLT	After 50 ms (typ.) the motor will restart
0201h	6	THPO	External Overtemperature	THPEN	N/A	Motor is restarted when temperature recovers
0201h	7	CPO	Locked Rotor	CPEN	CPLT	Wait 8 t_{CPTM} periods (see "Motor Lock")
0202h	0	THWPO	Chip Junction Warning	THWEN	N/A	Only warning
0202h	1	THSPO	Chip Junction Overtemperature	N/A	N/A	Motor is restarted when temperature recovers
0202h	2	WDTPO	Watchdog Timeout	WDTEN	N/A	Motor is restarted when WDT is reset
0202h	3	CLDO	Current Limit Warning	CLDOEN	N/A	Only warning
0202h	4	OOPO	Motor Open Detect	OOPOEN	N/A	Same as Motor Lock protect
0202h	5	RCSMPO	Register Checksum Error	N/A	N/A	Write MRRST = 55h or MRODL = 00h or MRODL = FFh
0202h	6	VCLVPO	VCC undervoltage	VCLVPEN	N/A	Motor is restarted when voltage recovers
0202h	7	PWMPO	PWM Input Fault	FLSEL ZPSEL PPDOSEL	N/A	Motor is restarted when PWM input recovers
0203h	0	VDHOVPO	VDH overvoltage	VDHOVPEN	N/A	Motor is restarted when voltage recovers
0203h	1	STUPO	Startup Operation	N/A	N/A	Only warning
0203h	2	SPCO	Loss of speed lock	N/A	N/A	Only warning
0203h	3	FGERPO	FG error protection output	FGERACCEN FGERDECEN	N/A	Wait t_{RCVTM} periods
0203h	4	REGAZ	Register data all 0 output	N/A	N/A	Only warning
0203h	5	OTPAZ	OTP data all 0 output	N/A	N/A	Only warning

4. See register MRCONF 7 to 12 for error and warning activation, masking and latching options.

Detection of Loss of Commutation Synchronization

Three methods are provided to detect the loss of commutation synchronization which is significant for sensorless motor control applications.

1. Open load
2. Abnormal rotational speed change
3. Locked rotor

They are explained in the following sections.

Open Load Detection

LV8961H can detect an open motor phase connection by means of setting OOPOEN = 1.

When this function is enabled, then after the detection of a blocked rotor (CPO=1), a testcurrent is briefly pulsed from UH to VL, from VH to WL and from WH to UL. The current will increase and stop when the current limit is reached (outputs are switched off). When the current limit is not reached within the time set by OPDTM, the outputs are switched off and an open connection is assumed. However, a motor phase is considered open (bit OOPO=1) only if both sequences related to that motorphase don't reach in time the current limit. Therefore it is important to set OPDTM sufficiently long.

It can be checked which U, V, W connector is open by reading the status register. One connector opening of U, V, W can be distinguished, but when two or three openings overlap, it is judged that everything is open so it cannot be distinguished what is not open. Also, if only one of UH−VL, VH−WL, WH−UL combinations don't reach the current limit, it is judged that all phases are connected.

When automatic recovery mode is set, OOPO returns to 0 when the time set in the CPTM register (the constraint protection detection time multiplied by 8) has elapsed. When latch mode is set, OOPO returns to 0 by EN = L input, PWM 0% input, or MRRST command.

Because the open load detection is performed after the constraint protection detection, CPO = 1 is output.

Figure 17 shows an example where automatic recovery mode is set and phase−V is detected to be open.

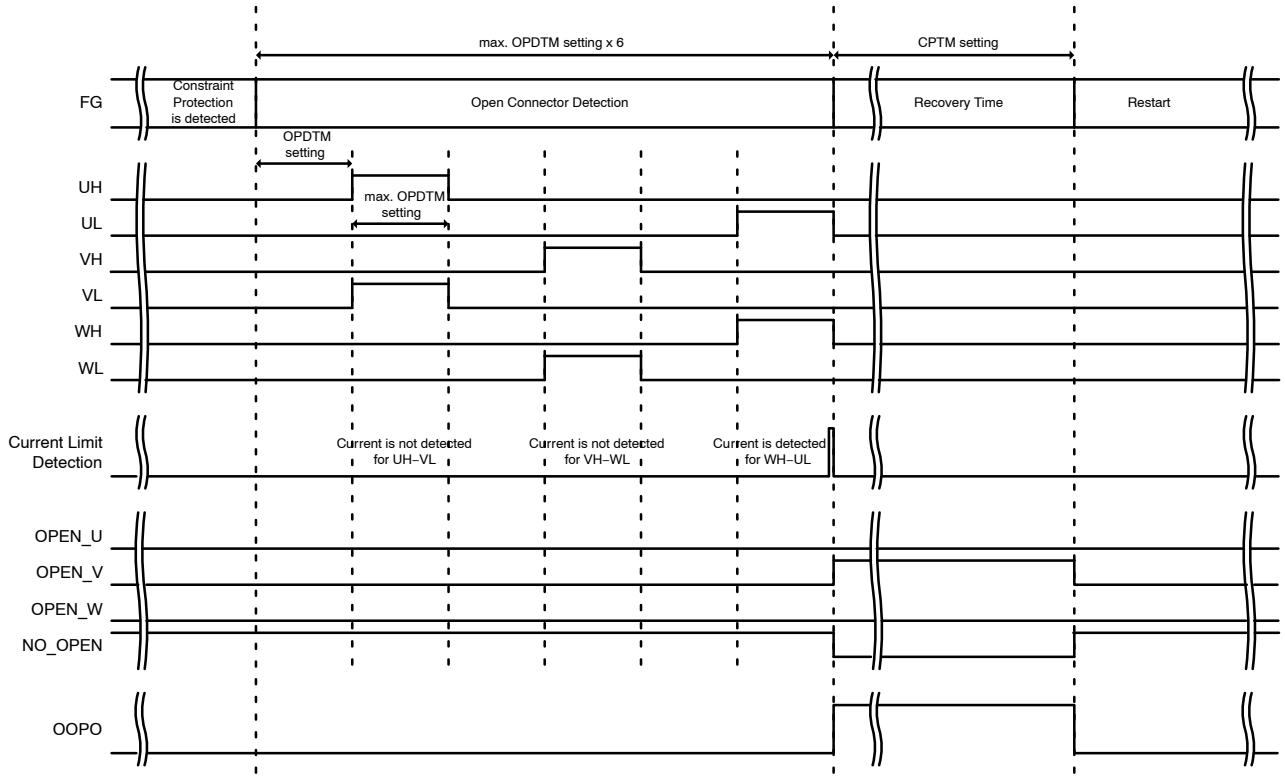

Figure 17. Timing Chart of OOPO

Abnormal Rotational Speed Change Detection

The abnormal rotational speed change detection is activated for acceleration through bit FGERACCEN and for deceleration by means of FGERDECEN.

An abnormal acceleration is detected if the number of detected BEMF zero−crossings immediately after the mask is opened is equal or larger than the number represented by FGERACC.

An abnormal deceleration is detected if no zero−crossings are observed during the time represented by FGERDEC (Table 4).

Table 4. FGERDEC SETTING

FGERDEC[2:0]	Detection Setting
0	(previous 60 electrical degrees period) × 1.25
1	(previous 60 electrical degrees period) × 1.5
2	(previous 60 electrical degrees period) × 1.75
3	(previous 60 electrical degrees period) × 2
4	(previous 60 electrical degrees period) × 3
5	(previous 60 electrical degrees period) × 4
6	(previous 60 electrical degrees period) × 6
7	(previous 60 electrical degrees period) × 8

If it is judged that the rotation speed is abnormal, LV8961H restarts from free−run detection after the recovery time set by RCVTM has elapsed.

Upon detection of abnormal rotational speed change, all predriver outputs are switched off and bits FGERACCO resp. FGERDECO are set. They will reset when the recovery time (RCVTM) elapses.

The protection state also returns to normal state by either EN = L input, sensorless logic reset pulse by MRRST.

When FGERACCEN/FGERDECEN = 0, although the rotation speed abnormality is detected, state transition to the protection state does not occur.

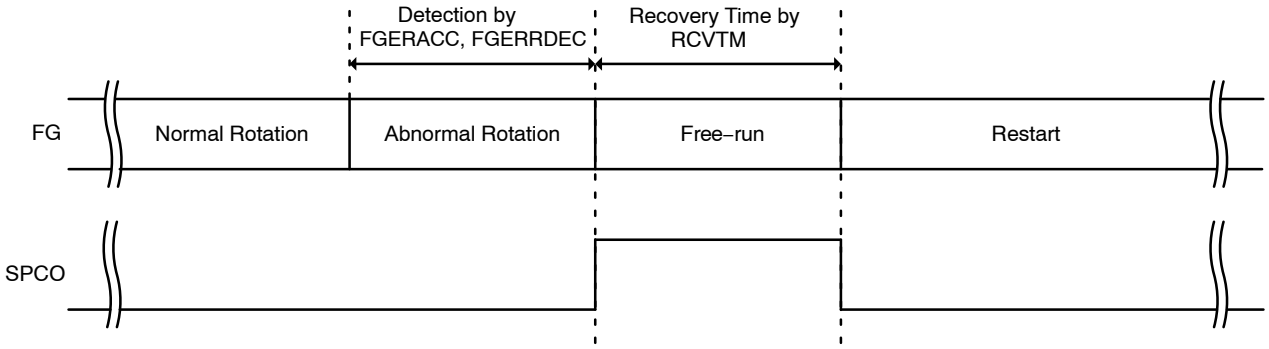

Figure 18. Timing Chart of SPCO

Locked Rotor Detection

Open−loop startup continues for the time programmed into CPTM (MRCONF6[6:3]). If no BEMF is detected during that time a locked rotor error is indicated.

Table 5. MRCONF6

ADDR	Data Name	D[7]	D[6]	D[5]	D[4]	D[3]	D[2]	D[1]	D[0]
0106h	MRCONF6	0	CPTM[3:0]				THTH[1:0]		TSTS

CPTM[3:0 : Constrained movement Protection TiMe

The locked rotor is detected by counting the time LV8961H is in the startup mode without BEMF detection. If consecutive seven BEMF zero−crossings are not detected within the time programmed into CPTM register, the driver outputs are turned off and the locked rotor is flagged.

In auto−recovery mode, the motor will remain off for the open−loop startup timeout duration multiplied by 8, before another startup is attempted.

Detection time has maximum 1 ms error, because it is sampled by 1 ms clock.

Table 6. MRDIAG0

ADDR	Data Name	D[7]	D[6]	D[5]	D[4]	D[3]	D[2]	D[1]	D[0]
0201h	MRDIAG0	CPO	THPO	FSPO	VGLLVPO	CHPLVPO	VSOVPO	VSLVPO	OCPO

CPO : Constrained movement Protection Output

If no BEMF is detected during the entire open−loop startup time as programmed in CPTM, then either the rotor is blocked, or startup parameters are not correct. The drivers will be disabled.

SPI Interface

In the LV8961H the SPI interface is used to perform general communications for status reporting, control and programming. The SPI format is MODE−0 MSB first.

SPI communication with the LV8961H follows the established industry standard practices. Data is transferred MSB first, and it is captured at the rising edge of the clock which stays in logical low during idle. Figure 19 shows LV8961H SPI format. When the first SI bit “R/W” is LOW, the register data will be transferred from LV8961H to the master device. When “R/W” is HIGH, the register data is transferred from the master device to the LV8961H register.

The address data is composed of 16 bits and has a function of accessing from the address specified by the data Length [2:0] setting to the address of continuous 8 bytes by one communication. In addition, the LV8961H offers CRC check feature to ensure SPI communication. Therefore, Format 1 in Figure 19 requires a minimum 5 bytes data length with one access. Format 2 in Figure 19 is prepared to access with a short data length. It can be used for addresses requiring access in a short time and is set by the data BASEL[3:0].

When the repeating access to the same register access is required, a shorter bit−length alias of the target address can reduce the total length of the SPI serial communication data train. In LV8961H, the base address pointers are provided as an alias of the full−bit address. The base address can be specified with the register “BAREG[15:0]”. And, BAREG[15:0] is activated as the base address pointer when the bit−field “BASEL[3:0]” value in the SPI serial data train is 15. Without BAREG setting, 14 preset base addresses,

which might be read or written frequently and repeatedly, are provided. The following table shows the those addresses selected by the bit−field BASEL[3:0].

Table 7.

BASEL[3:0]	Register name	Register address	Description
0	NA	NA	Direct addressing in full−bit
1	MRACK0	0000h	55h fixed value read−only
2	MRSPCT0	0002h	Current control parameters
3	MRSPCT1	0003h	Lead angle parameters
4	MRSPCT3	0005h	Startup parameters
5	MRSPCT7	0009h	Speed control PI parameters
6	MRSPCT10	000Ch	Speed control parameters
7	MRSPCT11	000Dh	Speed curve parameters
8	MRSPCT19	0015h	BEMF window parameters
9	MRDIAG0	0201h	Diagnosis flags
10	MRSTAT0	0205h	Status
11	MRRST	0300h	Reset related
12	MRCTL0	0301h	PWM duty cycle input
13	MRCTL2	0303h	commutation parameter
14	MRCTL5	0306h	STATUS selection
15	Selectable	Selectable	Any register selected with the register

The base address is the first one, and the consecutive multiple address can be accessed by setting the bit−field “LENGTH[2:0]”.

For example, to write the duty cycle data to the register PWMDTIN[9:0] (located in MRCTL0 0301h and MRCTL1 0302h), the following three data patters are applicable and typical.

1. Writing twice by one byte (total 64 bits)

Table 8.

1	2	3	4	5	6	7	8	9 to 16	17 to 24	25 to 32
WR	Length			BASEL				Address[15:8]	Address[7:0]	Data LSB
1	0	0	0	0	0	0	0	03	01h	PWMDTIN[7:0]

Table 9.

33	34	35	36	37	38	39	40	41 to 48	49 to 56	57 to 64
WR	Length			BASEL				Address[15:8]	Address[7:0]	Data MSB
1	0	0	0	0	0	0	0	03h	02h	PWMDTIN[9:8]

2. Writing once by two−byte with the full address (total 40 bits)

Table 10.

1	2	3	4	5	6	7	8	9 to 16	17 to 24	25 to 32	33 to 40
WR	Length			BASEL				Address[15:8]	Address[7:0]	Data LSB	Data MSB
1	0	0	1	0	0	0	0	03h	01h	PWMDTIN[7:0]	PWMDTIN[9:8]

3. Writing once by two−byte with the base address (total 24 bits)

Table 11.

1	2	3	4	5	6	7	8	9 to 16	17 to 24
WR	Length			BASEL				Data LSB	Data MSB
1	0	0	1	1	1	0	0	PWMDTIN[7:0]	PWMDTIN[9:8]

Where, the bit sequence of data bytes is;

Table 12.

sequence	1st	2nd	3rd	4th	5th	6th	7th	8th
PWNDTIN LSB	[7]	[6]	[5]	[4]	[3]	[2]	[1]	[0]

Table 13.

sequence	1st	2nd	3rd	4th	5th	6th	7th	8th
PWNDTIN MSB	NA	NA	NA	NA	NA	NA	[9]	[8]

There are two items to be especially careful of with the general communication scheme:

1. Communications must be full duplex and simultaneous. It is not allowed to send one transaction and then read data on a second transaction as the status register information will be updated on the first transaction and then be out of date for the second. Some systems break transactions into separate read and write operations which is not acceptable with the LV8961H.
2. It is important the system master uses the clock and data polarities and phases as shown above. Both the clock and data on some systems can be inverted for various reasons but must arrive at the LV8961H per the above drawing. Common errors include SCLK inversion such that the leading edge arrives as a downward transition rather than a rising edge, or having the data to clock phase incorrect. Data phase must be such that the data only changes during a clock falling edge and is completely stable during a clock rising edge. This means a good margin of one half of a bit time exists to eliminate transmission delay hazards.

The first byte returned on all transactions is always the status register, GSDAT, and contains information such as the busy flag during programming operations.

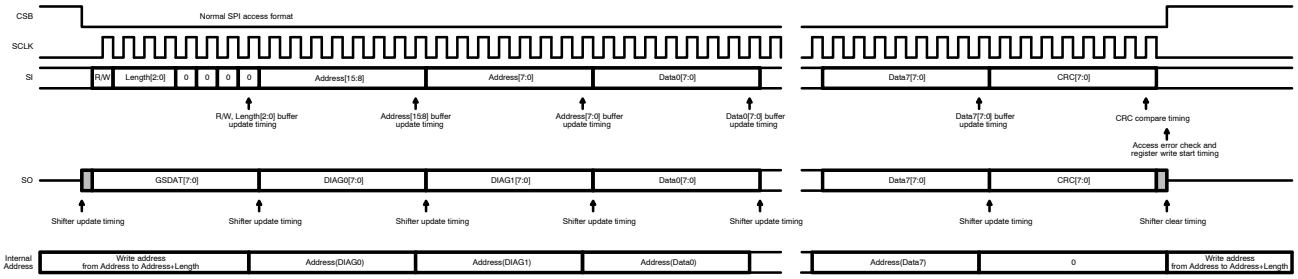

Format 1 : Normal SPI access format

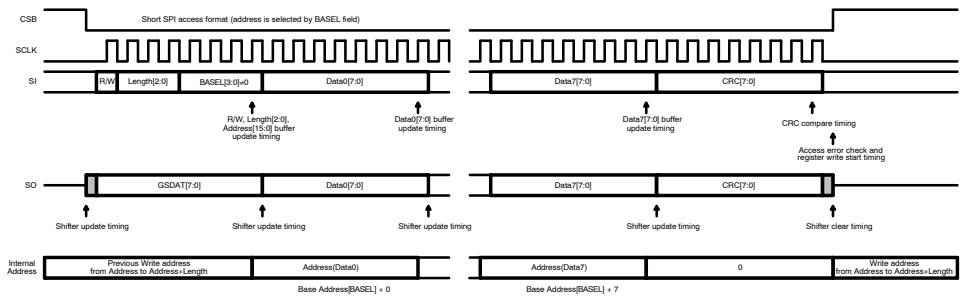

Format 2 : Short SPI access format

Figure 19. SPI Format

The header byte structure of the SPI format can be described by the following C language program.

```
enum readwrite {RD, WR};
enum regCount {cnt1, cnt2, cnt3, cnt4, cnt5, cnt6, cnt7, cnt8};
enum baseReg {na, MRACK0, MRSPCT0, MRSPCT1, MRSPCT3, MRSPCT7, MRSPCT10, MRSPCT11,\
  MRSPCT19, MRDIAG0, MRSTAT0, MRRST, MRCTL0, MRCTL2, MRCTL5, BY_BAREG};

union {
  uint8_t bytewise;
  struct {
    baseReg   BASEL:  4;
    regCount  Length: 3;
    readwrite RW:     1;
  };
} header;
```

The checksum (CRC) code of the SPI data train is calculated by the following function.

```
#define CHAR_BIT      8         /* number of bits in a char */
#define MSB_CRC8    (0x4D)      /* polynominal*/

uint8_t GetCRC8_2(uint8_t seed, const void *buff, size_t data_size)
{
  uint8_t *p = (uint8_t *)buff;
  uint8_t crc8;
  int i;

  for (crc8 = seed; data_size != 0; data_size--){
    crc8 ^= *p++;

    for (i = 0; i < CHAR_BIT; i++){
      if (crc8 & 0x80){
        crc8 <<= 1; crc8 ^= MSB_CRC8;
      }
      else{
        crc8 <<= 1;
      }
    }
  }
  return crc8;
}
```

An example SPI communication is shown below. It shows the case that the two bytes from the register MRACK0 within one transaction, using the base address scheme.

```
uint8_t SPI_WR_BUF[32];
uint8_t SPI_RD_BUF[32];

void example_main()
{
  int i;

  header.RW = RD;          /* read */
  header.Length = cnt2;    /* 2 bytes */
  header.BASEL = MRACK0;   /* from MRACK0 */
  Serial.print("Header = ");
  Serial.print(header.bytewise, HEX);
  Serial.println("h");

  SPI_WR_BUF[0] = header.bytewise;
  SPI_WR_BUF[1] = 0;               /* dummy data */
  SPI_WR_BUF[2] = 0;               /* dummy data */
  SPI_WR_BUF[3] = GetCRC8_2((uint8_t)0, SPI_WR_BUF, 3);
  Serial.print("CRC = ");
  Serial.print(SPI_WR_BUF[3], HEX);
  Serial.println("h");

  digitalWrite(CSB_pin, LOW);
  for (i = 0; i < 4; ++i)
  {
    SPI_RD_BUF[i] = SPI.transfer(SPI_WR_BUF[i]);
    Serial.print(SPI_WR_BUF[i], HEX); Serial.print("h, ");
    Serial.print(SPI_RD_BUF[i], HEX); Serial.println("h");
  }
  digitalWrite(CSB_pin, HIGH);
}
```

This output is shown below.

```
Header = 11h
CRC = 66h

WR,  RD
11h, 02h
00h, 55h
00h, AAh
66h, B3h
```

GSDAT Field

Global status is always output to this field. Global status contains following information.

GSDAT[7:0]

Bit 7	6	5	4	3	2	1	Bit 0	
ORBEN	SACF	DIAGS	LATCH	OBSY	SMOD[2:0]			
					0	0	0	Sleep mode
					0	0	1	Device startup time
					0	1	0	Standby mode
					0	1	1	N/A
					1	0	0	N/A
					1	0	1	Normal mode without FG output
					1	1	0	Normal mode with FG output
					1	1	1	Sleep mode
0	x	0	0	0	x	x	x	Normal operation
				1				OTP busy with read/write access
			1					Latched shutdown condition
		1						Failure condition
	0							Last SPI access OK
	1							Last SPI access failed*
1								OTP integrity test mode

The following SPI failures are detectable and reported collectively in GSDAT as general SPI failures:

- Any access to an address which are outside the defined address space
- The number of SCLK transitions is not 16 within one word transfer
- Any access to MRCONF, MRACS, ORCONF, ORACS while OBSY = 1 (during write operations)
- Write access to MRODL register while OBSY=1 (during write operations)
- Write access to any of the main registers after setting MSAENB = 1 (Implies MRxxxx registers are locked)
- Write access to any of the OTP registers after OSAENB = 1 (Implies ORxxxx registers are locked)
- Write access attempt to a read−only or locked register
- SI signal changed at positive edge of SCLK (Incorrect data/sclk phase setup)

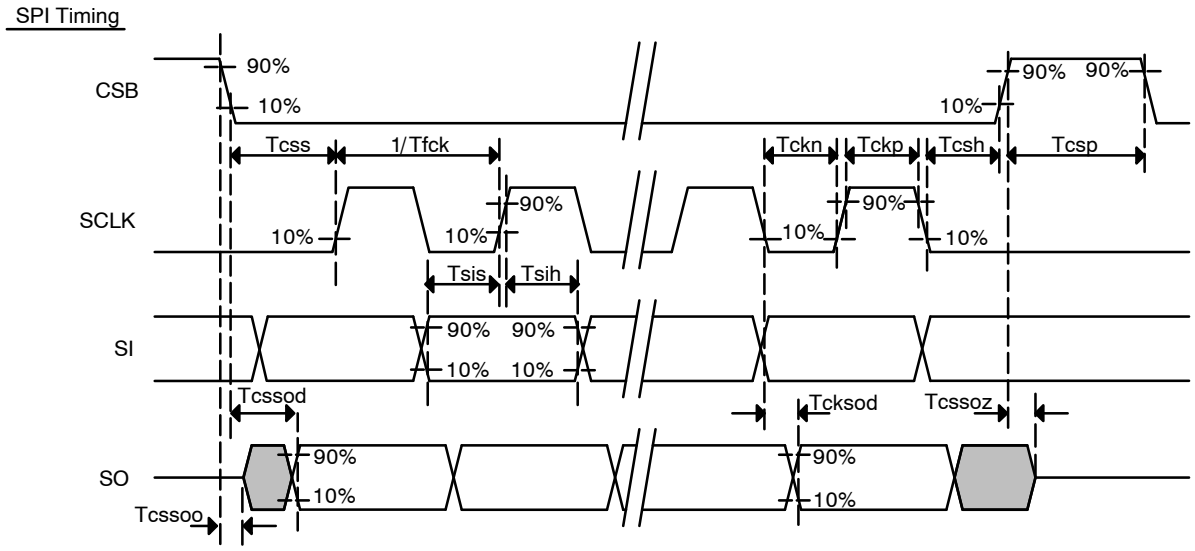

Figure 20. SPI Timing Chart

SPI TIMING

(T_J = −40 to 150°C, VS = 4.5 to 28 V, Pull−up resistance of SO pin = 2.4 kΩ, Output load of SO pin = 30 pF)

Symbol	Comment	Min	Typ	Max	Unit
Tfck	SCLK clock frequency			500	kHz
Tckp	SCLK high pulse width	950			ns
Tckn	SCLK low pulse width	950			ns
Tcss	CSB setup time	950			ns
Tcsh	CSB hold time	950			ns
Tcsp	CSB high pulse width	1900			ns
Tsis	SI setup time	450			ns
Tsih	SI hold time	450			ns
Tcssod	CSB fall edge to SO delay time			950	ns
Tcksod	SCLK fall edge to SO delay time			950	ns
Tcssoo	CSB fall edge to SO data out time	0			ns
Tcssoz	CSB rise edge to SO High Z out time			950	ns

Register Description

SPI Register Map

The SPI interface allows read access to the entire address space of the main registers. The main registers can only be written in Standby mode and then only if the write lock bit MSAENB has never been set high.

SPEED CONTROL OVERVIEW

Write Enable	Limitation by OBSY	ADDR	Data Name	D[7]	D[6]	D[5]	D[4]	D[3]	D[2]	D[1]	D[0]
Read−Only	Read−Only	−	GSDAT	ORBEN	SACF	DIAGS	LATCH	OBSY	SMOD[2:0]		
Read−Only	Read−Only	0000h	MRACK0	0	1	0	1	0	1	0	1
		0001h	MRACK1	1	0	1	0	1	0	1	0
MSAENB=L	OBSY=L	0002h	MRSPCT0	0	0	CLSEL	CLDWN OFF	OCSEL[1:0]		CLMSPD[1:0]	
		0003h	MRSPCT1	0	0	SSTT[5:0]					
		0004h	MRSPCT2	STOSC[7:0]							
		0005h	MRSPCT3	SLMD	0	0	LASET_L[4:0]				
		0006h	MRSPCT4	0	0	0	LASET_H[4:0]				
		0007h	MRSPCT5	0	0	0	LASET_LIM[4:0]				
		0008h	MRSPCT6	MSKRSTNUM0_SIX[3:0]				MSKRSTNUM1_SIX[3:0]			
		0009h	MRSPCT7	0	PX[2:0]			0	PG[2:0]		
		000Ah	MRSPCT8	IX[3:0]				0	IG[2:0]		
		000Ch	MRSPCT10	0	DDUTYSEL[2:0]			USTEPSEL[1:0]		DSTEPSEL[1:0]	
		000Dh	MRSPCT11	DUTY_L[7:0]							
		000Eh	MRSPCT12	DUTY_H[7:0]							
		000Fh	MRSPCT13	TAG_L[7:0]							
		0010h	MRSPCT14	0	TAG_L[14:8]						
		0011h	MRSPCT15	TAG_H[7:0]							
		0012h	MRSPCT16	0	TAG_H[14:8]						
Always OK		0013h	MRSPCT17	0	0	0	0	0	0	0	RECALC
MSAENB=L		0015h	MRSPCT19	0	0	0	0	0	0	WINDSEL[1:0]	
		0016h	MRSPCT20	MSKRSTNUM0_INI[3:0]				MSKRSTNUM1_INI[3:0]			
		0017h	MRSPCT21	MSKRSTNUM0_THR[3:0]				MSKRSTNUM1_THR[3:0]			
		0018h	MRSPCT22	MSKRSTNUM0_TWO[3:0]				MSKRSTNUM1_TWO[3:0]			
		0019h	MRSPCT23	MSKRSTNUM0_ONE[3:0]				MSKRSTNUM1_ONE[3:0]			
		001Ah	MRSPCT24	0	0	0	0	0	0	0	RBSEL

MRACK0

ADDR	Data Name	D[7]	D[6]	D[5]	D[4]	D[3]	D[2]	D[1]	D[0]
0000h	MRACK0	0	1	0	1	0	1	0	1

MRACK0[7:0]: Main Register Access ChecK

MRACK0[7:0] read data is fixed to 55h

This read−only register is used to check IC and SPI interface. 55h is read from this register in standby and normal mode, FFh during sleep mode.

MRACK1

ADDR	Data Name	D[7]	D[6]	D[5]	D[4]	D[3]	D[2]	D[1]	D[0]
0001h	MRACK1	1	0	1	0	1	0	1	0

MRACK1[7:0]: Main Register Access ChecK
MRACK1[7:0] read data is fixed to AAh

This read−only register is used to check IC and SPI interface. AAh is read from this register in standby and normal mode, FFh during sleep mode.

MRSPCT0 (DEFAULT: 00h)

ADDR	Data Name	D[7]	D[6]	D[5]	D[4]	D[3]	D[2]	D[1]	D[0]
0002h	MRSPCT0	0	0	CLSEL	CLDWNOFF	OCSEL[1:0]		CLMSPD[1:0]	

CLSEL: Current Limit threshold SELection
CLSEL=0: Threshold voltage 50 mV
CLSEL=1: Threshold voltage 100 mV

CLDWNOFF: Current Limit semi−powerDoWN OFF
CLDWNOFF=0: function ON
CLDWNOFF=1: function OFF

OCSEL[1:0]: OverCurrent threshold SELection
CLSEL=0
OCSEL[1:0]=0h: Threshold voltage 75 mV
OCSEL[1:0]=1h: Threshold voltage 100 mV
OCSEL[1:0]=2h: Threshold voltage 125 mV
OCSEL[1:0]=3h: Threshold voltage 150 mV
CLSEL=1
OCSEL[1:0]=0h: Threshold voltage 125 mV
OCSEL[1:0]=1h: Threshold voltage 150 mV
OCSEL[1:0]=2h: Threshold voltage 175 mV
OCSEL[1:0]=3h: Threshold voltage 200 mV

CLMSPD[1:0]: Current LiMit Semi−PowerDown level
CLMSPD[1:0]=0h: 0.1%
CLMSPD[1:0]=1h: 1.3%
CLMSPD[1:0]=2h: 2.5%
CLMSPD[1:0]=3h: 5.07%

MRSPCT1 (Default: 00h)

ADDR	Data Name	D[7]	D[6]	D[5]	D[4]	D[3]	D[2]	D[1]	D[0]
0003h	MRSPCT1	0	0	SSTT[5:0]					

SSTT[5:0]: Soft STart Time
SSTT[5:0]=00h: Soft start time 0.102 s
SSTT[5:0]=x: Soft start time 0.102 * (1 + x) s
SSTT[5:0]=3Fh: Soft start time 6.55 s
Soft start allows startup of motors with higher inertia by ramping the current. The soft start algorithm divides the current limit voltage 100 mV (Typ) into 16 sections and increases the value from 6.25 mV to 100 mV to switch over the current limit value. Case of 50 mV, increases the value from 3.125 mV to 50 mV.

MRSPCT2 (Default: 00h)

ADDR	Data Name	D[7]	D[6]	D[5]	D[4]	D[3]	D[2]	D[1]	D[0]
0004h	MRSPCT2	STOSC[7:0]							

STOSC[7:0]: STartup OSCillator
STOSC[7:0]=00h: 1.024 ms
STOSC[7:0]=x: 1.024 * (1 + x) ms
STOSC[7:0]=FFh: 262.14 ms

MRSPCT3 (Default: 00h)

ADDR	Data Name	D[7]	D[6]	D[5]	D[4]	D[3]	D[2]	D[1]	D[0]
0005h	MRSPCT3	SLMD	0	0	LASET_L[4:0]				

SLMD: SinusoidaL Mode Driving
SLMD=0: Trapezoidal drive with 120 degrees energization.
SLMD=1: Sinusoidal drive with 6 windows BEMF detection.

This bit selects whether the motor phases are driven with a trapezoidal or sinusoidal signal.

LASET_L[4:0]: Lead Angle SETting at Low output duty cycle (0%)

LASET_L[4:0]=00h: Lead angle 0 deg.
LASET_L[4:0]=x: Lead angle (x * 1.875) deg
LASET_L[4:0]=1Fh: Lead angle 58.125 deg.

It is possible to advance the commutation point towards zero−crossing of the BEMF signal. This helps to achieve BEMF field−weakening for higher rotational speeds and to compensate for delays in high speed operation.

MRSPCT4 (Default: 00h)

ADDR	Data Name	D[7]	D[6]	D[5]	D[4]	D[3]	D[2]	D[1]	D[0]
0006h	MRSPCT4	0	0	0	LASET_H[4:0]				

LASET_H[4:0]: Lead Angle SETting at High output duty cycle (100%)

LASET_H[4:0]=00h: Lead angle 0 deg.
LASET_H[4:0]=x: Lead angle (x * 1.875) deg
LASET_H[4:0]=1Fh: Lead angle 58.125 deg.

It is possible to advance the commutation point towards zero−crossing of the BEMF signal. This helps to achieve BEMF field−weakening for higher rotational speeds and to compensate for delays in high speed operation.

MRSPCT5 (Default: 00h)

ADDR	Data Name	D[7]	D[6]	D[5]	D[4]	D[3]	D[2]	D[1]	D[0]
0007h	MRSPCT5	0	0	0	LASET_LIM[4:0]				

LASET_LIM[4:0]: Lead Angle SETting max. LIMit

LASET_LIM[4:0]=00h: Lead angle 0 deg.
LASET_LIM[4:0]=x: Lead angle (x * 1.875) deg
LASET_LIM[4:0]=1Fh: Lead angle 58.125 deg.

It is possible to advance the commutation point towards zero−crossing of the BEMF signal. This helps to achieve BEMF field−weakening for higher rotational speeds and to compensate for delays in high speed operation.

MRSPCT6 (Default: 00h)

ADDR	Data Name	D[7]	D[6]	D[5]	D[4]	D[3]	D[2]	D[1]	D[0]
0008h	MRSPCT6	MSKRSTNUM0_SIX[3:0]				MSKRSTNUM1_SIX[3:0]			

MSKRSTNUM0_SIX[3:0]: MaSK Rate SeTting for bemf observation NUMber 0 for 6−window mode

MSKRSTNUM0_SIX[3:0]= x:
(x < 8) −> (15 + x * 3.75) deg.
(x ≥ 8) −> (41.25 + (x – 7) * 1.875) deg.

MSKRSTNUM1_SIX[3:0]: MaSK Rate SeTting for bemf observation NUMber 1 for 6−window mode

MSKRSTNUM1_SIX[3:0]=x:
((x + 1) * 1.875) deg.

MRSPCT7 (Default: 00h)

ADDR	Data Name	D[7]	D[6]	D[5]	D[4]	D[3]	D[2]	D[1]	D[0]
0009h	MRSPCT7	0	PX[2:0]			0	PG[2:0]		

PX[2:0]: Proportional gain eXponent

PX[2:0]=0h: Proportional gain 1 (through)
PX[2:0]=1h: Proportional gain 2
PX[2:0]=2h: Proportional gain 4
PX[2:0]=3h: Proportional gain 8
PX[2:0]=4h: Proportional gain 16
PX[2:0]=5h: Proportional gain 32
PX[2:0]=6h: Proportional gain 64
PX[2:0]=7h: Proportional gain 0 (cut)

PG[2:0]: Proportional Gain

PG[2:0]=0h: Proportional gain 1 (through)
PG[2:0]=1h: Proportional gain 7/8
PG[2:0]=2h: Proportional gain 6/8
PG[2:0]=3h: Proportional gain 5/8
PG[2:0]=4h: Proportional gain 4/8
PG[2:0]=5h: Proportional gain 3/8
PG[2:0]=6h: Proportional gain 2/8
PG[2:0]=7h: Proportional gain 1/8

MRSPCT8 (Default: 00h)

ADDR	Data Name	D[7]	D[6]	D[5]	D[4]	D[3]	D[2]	D[1]	D[0]
000Ah	MRSPCT8	IX[3:0]				0	IG[2:0]		

IX[3:0]: Integral gain eXponent

IX[3:0]=0h: Integral gain 1 (through)
IX[3:0]=1h: Integral gain 2
IX[3:0]=2h: Integral gain 4
IX[3:0]=3h: Integral gain 8
IX[3:0]=4h: Integral gain 16
IX[3:0]=5h: Integral gain 32
IX[3:0]=6h: Integral gain 64
IX[3:0]=7h: Integral gain 0 (cut)
IX[3:0]=8h: Integral gain 1 (through)
IX[3:0]=9h: Integral gain 1/2
IX[3:0]=Ah: Integral gain 1/4
IX[3:0]=Bh: Integral gain 1/8
IX[3:0]=Ch: Integral gain 1/16
IX[3:0]=Dh: Integral gain 1/32
IX[3:0]=Eh: Integral gain 1/64
IX[3:0]=Fh: Integral gain 0 (cut)

IG[2:0]: Integral Gain

IG[2:0]=0h: Integral gain 1 (through)
IG[2:0]=1h: Integral gain 7/8
IG[2:0]=2h: Integral gain 6/8
IG[2:0]=3h: Integral gain 5/8
IG[2:0]=4h: Integral gain 4/8
IG[2:0]=5h: Integral gain 3/8
IG[2:0]=6h: Integral gain 2/8
IG[2:0]=7h: Integral gain 1/8

MRSPCT10 (Default: 00h)

ADDR	Data Name	D[7]	D[6]	D[5]	D[4]	D[3]	D[2]	D[1]	D[0]
000Ch	MRSPCT10	0	DDUTYSEL[2:0]			USTEPSEL[1:0]		DSTEPSEL[1:0]	

DDUTYSEL[2:0]: Detection level of DUTY output changes SELection

DDUTYSEL[2:0]=0h: No limitation.
DDUTYSEL[2:0]=1h: Limit to ±20.3% (±208)
DDUTYSEL[2:0]=2h: Limit to ±17.8% (±182)
DDUTYSEL[2:0]=3h: Limit to ±15.2% (±156)
DDUTYSEL[2:0]=4h: Limit to ±12.7% (±130)
DDUTYSEL[2:0]=5h: Limit to ±10.2% (±104)
DDUTYSEL[2:0]=6h: Limit to ±7.6% (±78)
DDUTYSEL[2:0]=7h: Limit to ±5.1% (±52)

USTEPSEL[1:0]: UpSpeed Transition stEP SELectio. (Case of Motor is 2 poles)

USTEPSEL[1:0]=0h: max. 32766 rpm.

USTEPSEL[1:0]=1h: Upper limit is 400% of current speed and max. 32766 rpm.

USTEPSEL[1:0]=2h: Upper limit is current speed and max. 16384 rpm.

USTEPSEL[1:0]=3h: Upper limit is 25% of current speed and max. 4096 rpm.

DSTEPSEL[1:0]: DownSpeed Transition stEP SELection. (Case of Motor is 2 poles)

DSTEPSEL[1:0]=0h: Upper limit is current speed and max. 32766 rpm.

DSTEPSEL[1:0]=1h: Upper limit is 25% of current speed and max. 4096 rpm.

DSTEPSEL[1:0]=2h: Upper limit is 6.25% of current speed and max. 1024 rpm.

DSTEPSEL[1:0]=3h: Upper limit is 1.5625% of current speed and max. 256 rpm.

MRSPCT11 (Default: 00h)

ADDR	Data Name	D[7]	D[6]	D[5]	D[4]	D[3]	D[2]	D[1]	D[0]
000Dh	MRSPCT11	DUTY_L[7:0]							

DUTY_L[7:0]: input pwm DUTY cycle Low limit

DUTY_L[7:0]=00h: Lower limit 0.098%
DUTY_L[7:0]=x: Lower limit ((x * 2 + 1) * 100 / 1024) %
DUTY_L[7:0]=FFh: Lower Limit 49.9%

MRSPCT12 (Default: 00h)

ADDR	Data Name	D[7]	D[6]	D[5]	D[4]	D[3]	D[2]	D[1]	D[0]
000Eh	MRSPCT12	DUTY_H[7:0]							

DUTY_H[7:0]: input pwm DUTY cycle High limit
DUTY_H[7:0]=00h: Upper limit 50%
DUTY_H[7:0]=x:
Upper limit ((x * 2) * 100 / 1024 + 50) %
DUTY_H[7:0]=FEh: Upper Limit 99.6%
DUTY_H[7:0]=FFh: Upper Limit 99.9%

MRSPCT13 (Default: 00h)

ADDR	Data Name	D[7]	D[6]	D[5]	D[4]	D[3]	D[2]	D[1]	D[0]
000Fh	MRSPCT13	TAG_L[7:0]							

MRSPCT14 (Default: 00h)

ADDR	Data Name	D[7]	D[6]	D[5]	D[4]	D[3]	D[2]	D[1]	D[0]
0010h	MRSPCT14	0	TAG_L[14:8]						

TAG_L[14:0]: TArGet speed Low.
(Case of Motor is 2 poles)
SCEN=0 (Closed−loop)
TAG_L[14:0]=0000h: Lower limit 0 rpm
TAG_L[14:0]=0001h: Lower limit 2 rpm
TAG_L[14:0]=x:
(x ≥ 4E20h) −> Lower limit 40000 rpm
(x < 4E20h) −> Lower limit x * 2 rpm
TAG_L[14:0]=7FFEh: Lower Limit 40000 rpm
TAG_L[14:0]=7FFFh: Lower Limit 40000 rpm
SCEN=1 (Open−loop)
Ignore TAG_L
0% duty output is fixed.

MRSPCT15 (Default: 00h)

ADDR	Data Name	D[7]	D[6]	D[5]	D[4]	D[3]	D[2]	D[1]	D[0]
0011h	MRSPCT15	TAG_H[7:0]							

MRSPCT16 (Default: 00h)

ADDR	Data Name	D[7]	D[6]	D[5]	D[4]	D[3]	D[2]	D[1]	D[0]
0012h	MRSPCT16	0	TAG_H[14:8]						

TAG_H[14:0]: TArGet speed High.
(Case of Motor is 2 poles)
SCEN=0 (Closed−loop)
TAG_H[14:0]=0000h: Upper limit 0 rpm
TAG_H[14:0]=0001h: Upper limit 2 rpm
TAG_H[14:0]=x:
(x ≥ 4E20h) −> Upper limit 40000 rpm
(x < 4E20h) −> Upper limit x * 2 rpm
TAG_H[14:0]=7FFEh: Upper Limit 40000 rpm
TAG_H[14:0]=7FFFh: Upper Limit 40000 rpm
SCEN=1 (Open−loop)
Ignore TAG_H
100% duty output is fixed.

MRSPCT17 (Default: 00h)

ADDR	Data Name	D[7]	D[6]	D[5]	D[4]	D[3]	D[2]	D[1]	D[0]
0013h	MRSPCT17	0	0	0	0	0	0	0	RECALC

RECALC: RECALCulate target speed from input pwm control table
RECALC=0: No operation.
RECALC=1: Update latched values (SCEN, DUTY_L, DUTY_H, TAG_L and TAG_H) in the target speed calculation module and RECALC will be cleared automatically.

MRSPCT19 (Default: 00h)

ADDR	Data Name	D[7]	D[6]	D[5]	D[4]	D[3]	D[2]	D[1]	D[0]
0015h	MRSPCT19	0	0	0	0	0	0	WINDSEL[1:0]	

WINDSEL[1:0]: Bemf WINdow mode SELection

WINDSEL[1:0]=0h: 6−window

WINDSEL[1:0]=1h: 3−window

WINDSEL[1:0]=2h: 2−window

WINDSEL[1:0]=3h: 1−window

MRSPCT20 (Default: 00h)

ADDR	Data Name	D[7]	D[6]	D[5]	D[4]	D[3]	D[2]	D[1]	D[0]
0016h	MRSPCT20	MSKRSTNUM0_INI[3:0]				MSKRSTNUM1_INI[3:0]			

MSKRSTNUM0_INI[3:0]: MaSK Rate SeTting for bemf observation NUMber 0 for startup 6−window mode

MSKRSTNUM0_INI[3:0]=x:

(x < 8) −> (15 + x * 3.75) deg.

(x ≧ 8) −> (41.25 + (x − 7) * 1.875) deg.

MSKRSTNUM1_INI[3:0]: MaSK Rate SeTting for bemf observation NUMber 1 for startup 6−window mode

*MSKRSTNUM1_INI[3:0]=x: ((x + 1) * 1.875) deg.*

MRSPCT21 (Default: 00h)

ADDR	Data Name	D[7]	D[6]	D[5]	D[4]	D[3]	D[2]	D[1]	D[0]
0017h	MRSPCT21	MSKRSTNUM0_THR[3:0]				MSKRSTNUM1_THR[3:0]			

MSKRSTNUM0_THR[3:0]: MaSK Rate SeTting for bemf observation NUMber 0 for 3−window mode

MSKRSTNUM0_THR[3:0]=x:

(x < 8) −> (15 + x * 3.75) deg.

(x ≧ 8) −> (41.25 + (x − 7) * 1.875) deg.

MSKRSTNUM1_THR[3:0]: MaSK Rate SeTting for bemf observation NUMber 1 for 3−window mode

MSKRSTNUM1_THR[3:0]=x: ((x + 1) * 1.875) deg.

MRSPCT22 (Default: 00h)

ADDR	Data Name	D[7]	D[6]	D[5]	D[4]	D[3]	D[2]	D[1]	D[0]
0018h	MRSPCT22	MSKRSTNUM0_TWO[3:0]				MSKRSTNUM1_TWO[3:0]			

MSKRSTNUM0_TWO[3:0]: MaSK Rate SeTting for bemf observation NUMber 0 for 2−window mode

MSKRSTNUM0_TWO[3:0]=x:

(x < 8) −> (15 + x * 3.75) deg.

(x ≧ 8) −> (41.25 + (x − 7) * 1.875) deg.

MSKRSTNUM1_TWO[3:0]: MaSK Rate SeTting for bemf observation NUMber 1 for 2−window mode

MSKRSTNUM1_TWO[3:0]=x: ((x + 1) * 1.875) deg.

MRSPCT23 (Default: 00h)

ADDR	Data Name	D[7]	D[6]	D[5]	D[4]	D[3]	D[2]	D[1]	D[0]
0019h	MRSPCT23	MSKRSTNUM0_ONE[3:0]				MSKRSTNUM1_ONE[3:0]			

MSKRSTNUM0_ONE[3:0]: MaSK Rate SeTting for bemf observation NUMber 0 for 1−window mode

MSKRSTNUM0_ONE[3:0]=x:

(x < 8) −> (15 + x * 3.75) deg.

(x ≧ 8) −> (41.25 + (x − 7) * 1.875) deg.

MSKRSTNUM1_ONE[3:0]: MaSK Rate SeTting for bemf observation NUMber 1 for 1−window mode

MSKRSTNUM1_ONE[3:0]=x: ((x + 1) * 1.875) deg.

MRSPCT24 (DEFAULT: 00H)

ADDR	Data Name	D[7]	D[6]	D[5]	D[4]	D[3]	D[2]	D[1]	D[0]
001Ah	MRSPCT24	0	0	0	0	0	0	0	RBSEL

RBSEL: Reverse detection Brake SELection

RBSEL=0: Short brake is disabled when reverse rotation is detected.

RBSEL=1: Short brake is enabled when reverse rotation is detected.

If RBSEL is set, short brake (all low−side FET are ON) is done until the rotation stops after reverse rotation is detected.

MOTOR CONFIGURATION REGISTER OVERVIEW

Write Enable	Limitation by OBSY	ADDR	Data Name	D[7]	D[6]	D[5]	D[4]	D[3]	D[2]	D[1]	D[0]
MSAENB=L & EN=L	OBSY=L	0100h	MRCONF0	FRMD	FRREN	SCEN	PWMF	REGSEL	VCEN	SPCFG	PWMIN SEL
		0101h	MRCONF1	FLSEL[2:0]			ZPSEL[2:0]			PDTC	PWM ON
		0102h	MRCONF2	FGST BLMD	FGOF[1:0]		FDTI[4:0]				
		0103h	MRCONF3	CLMASK[3:0]				OCMASK[3:0]			
		0104h	MRCONF4	SROFFT[3:0]				CRMASK[3:0]			
		0105h	MRCONF5	SYNC EN	PPDO SEL	FSCDT[1:0]		FSCDL[3:0]			
		0106h	MRCONF6	0	CPTM[3:0]				THTH[1:0]		TSTS
		0107h	MRCONF7	WDTEN	WDTS EL[2]	WDT[5:0]					
		0108h	MRCONF8	VCLVP EN	CPEN	THWEN	THPEN	FSPEN	OVPEN	OCPEN	DIAGSEL
		0109h	MRCONF9	RCVTM[1:0]		WDTSEL[1:0]		CPLT	FSPLT	OCPLT	DLTO
		010Ah	MRCONF10	VDHO VPEN	OOPO EN	CLDO EN	FGERA CCEN	RCSM PMD	RCSM PEN	OPDTM[1:0]	
		010Bh	MRCONF11	INIODU TYMD	INITA GMD	CLREFE N_ROT	CLREFE N_STOP	ATSYN COFF	0	STSYNC EN	SPIIN SEL
		010Ch	MRCONF12	FGERD ECEN	FGERDEC[2:0]			FGERACC[3:0]			
		010Dh	MRCONF13	0	DWNSET	PDTSEL[1:0]		FSPDTM[1:0]		OVPMASK[1:0]	
		010Eh	MRCONF14	RCSM[7:0]							
		010Fh	MRCONF15	0	0	0	SSCG EN	SSCGCN[1:0]		Internal use	

MRCONF0 (Default: 00h)

ADDR	Data Name	D[7]	D[6]	D[5]	D[4]	D[3]	D[2]	D[1]	D[0]
0100h	MRCONF0	FRMD	FRREN	SCEN	PWMF	REGSEL	VCEN	SPCFG	PWMINSEL

FRMD: Forward / Reverse MoDe
FRMD=0: Forward motor rotation
FRMD=1: Reverse motor rotation

FRREN: FRee Running ENable
FRREN=0: Motor will start with a BEMF detection.
FRREN=1: Motor will start open−loop with startup parameters.

SCEN: external Speed Control ENable
SCEN=0: Speed feedback loop is active. RPM is selected from input duty cycle.
SCEN=1: Power stage duty cycle is translated from input duty cycle.

PWMF: PWM input Frequency selection
PWMF=0: Valid PWM input frequency range from 5.3 Hz to 1 kHz.
PWMF=1: Valid PWM input frequency range from 5.3 Hz to 18.5 kHz.

REGSEL: Vcc REGulator SELection
REGSEL=0: VCC output set to 3.3 V.
REGSEL=1: VCC output set to 5 V.

VCEN: Vcc regulator ENable
VCEN=0: VCC is off.
VCEN=1: VCC is active.

SPCFG: Speed feedback loop calculation Period ConFiGuration
SPCFG=0: Calculate per 360 electrical degrees.
SPCFG=1: Calculate per 120 electrical degrees. (Using speed just before 360 electrical degrees)

PWMINSEL: PWM INput pin SELection
PWMINSEL=0: HVPIN is used for PWM input. (High voltage)
PWMINSEL=1: LVPIN is used for PWM input. (Low voltage)

MRCONF1 (Default: 00h)

ADDR	Data Name	D[7]	D[6]	D[5]	D[4]	D[3]	D[2]	D[1]	D[0]
0101h	MRCONF1	FLSEL[2:0]			ZPSEL[2:0]			PDTC	PWMON

FLSEL[2:0]: Full Load fallback level SELection (PWM input 100% duty mode)
FLSEL[2:0]=0h,7h: Motor is turned off
FLSEL[2:0]=1h: Motor duty cycle 25%
FLSEL[2:0]=2h: Motor duty cycle 50%
FLSEL[2:0]=3h: Motor duty cycle 75%
FLSEL[2:0]=4h: Motor duty cycle 100%
FLSEL[2:0]=5h: Motor duty cycle is decided by TAG_L setting
FLSEL[2:0]=6h: Motor duty cycle is decided by TAG_H setting

ZPSEL[2:0]: Zero Power fallback level SELection (PWM input 0% duty mode)
ZPSEL[2:0]=0h,7h: Motor is turned off
ZPSEL[2:0]=1h: Motor duty cycle 25%
ZPSEL[2:0]=2h: Motor duty cycle 50%
ZPSEL[2:0]=3h: Motor duty cycle 75%
ZPSEL[2:0]=4h: Motor duty cycle 100%
ZPSEL[2:0]=5h: Motor duty cycle is decided by TAG_L setting
ZPSEL[2:0]=6h: Motor duty cycle is decided by TAG_H setting

PDTC: Pending Detection of a Transition Control
PDTC=0: Fast startup operation is disabled.
PDTC=1: Fast startup operation is enabled.
If PDTC is set, the motor is driven with the duty cycle programmed into PDTSEL, as soon as EN is high.
This feature is bridging the initial 200 ms of operation until a valid PWM duty cycle can be decoded.

PWMON: PWM ON polarity
PWMON=0: PWM input signal is active high.
PWMON=1: PWM input signal is active low.

MRCONF2 (Default: 00h)

ADDR	Data Name	D[7]	D[6]	D[5]	D[4]	D[3]	D[2]	D[1]	D[0]
0102h	MRCONF2	FGSTBLMD	FGOF[1:0]		FDTI[4:0]				

FGSTBLMD: Frequency Generator STaBLe MoDe

FGSTBLMD=0: Disable

FGSTBLMD=1: Enable

It affects only for the 6−window mode (WINDSEL = 0). To determine the lead angle timing, the previous BEMF zero−cross interval is sampled. When this function is disabled, the sampling is done every 60 degree electrical cycle. When this function is enabled, the sampling is done every 120 degree, and the previous 60 degree interval will be estimated as 1/2 of 120 degree interval. It ignores the BEMF asymmetric characteristics (or waveform) between rise and fall.

FGOF[1:0]: Frequency Generator Output Frequency (= rotation speed)

FGOF[1:0]=0h: One transition per BEMF detection (FG3)

FGOF[1:0]=1h: One transition per every two BEMF detection (FG3/2)

FGOF[1:0]=2h: One pulse per electrical revolution (FG1)

FGOF[1:0]=3h: One pulse per every two electrical revolutions (FG1/2)

The FG3 signal is a representation of a successfully detected BEMF transition which occurs three times during every electrical revolution.

FDTI[4:0]: Fet Dead TIme

FDTI[4:0]=00h: 6.4 μs

FDTI[4:0]=x: (6.4 – x * 0.2) μs

FDTI[4:0]=1Fh: 0.2 μs

During phase switching between supply and GND it is possible for both low− and high−side drivers to be temporarily on at the same time causing large current spikes. Register FDTI defines a dead time during which both drivers will be kept off during these transitions.

MRCONF3 (Default: 00h)

ADDR	Data Name	D[7]	D[6]	D[5]	D[4]	D[3]	D[2]	D[1]	D[0]
0103h	MRCONF3	CLMASK[3:0]				OCMASK[3:0]			

CLMASK[3:0]: Current Limit MASKing time

CLMASK[3:0]=0h: Mask Time 0.2 μs

CLMASK[1:0]=x: Mask Time 0.2 * (1 + x) μs

CLMASK[3:0]=Fh: Mask Time 3.2 μs

In order to prevent noise and glitches causing from false current limiting, this mask time can be programmed.

OCMASK[3:0]: OverCurrent MASKing time

OCMASK[3:0]=0h: Overcurrent mask time 0.2 μs

OCMASK[3:0]=x:
Overcurrent mask time 0.2 * (1 + x) μs

OCMASK[3:0]=Fh: Overcurrent mask time 3.2 μs

The time to detect overcurrent can be programmed with OCMASK.

MRCONF4 (Default: 00h)

ADDR	Data Name	D[7]	D[6]	D[5]	D[4]	D[3]	D[2]	D[1]	D[0]
0104h	MRCONF4	SROFFT[3:0]				CRMASK[3:0]			

SROFFT[3:0]: Synchronous Rectification OFF Time

A reverse current detection at −25% of CLSEL can disable for a programmable time the synchronous rectification, e.g. to avoid that the power supply is lifted when the motor current is reduced quickly.

SROFFT[3:0]=0h: Synchronous rectification off time 4 FG

SROFFT[3:0]=x:
Synchronous rectification off time 4 * (1 + x) FG

SROFFT[3:0]=Fh: Synchronous rectification off time 64 FG

CRMASK[3:0]: Current Reversed MASKing time

This is the masking time of the reverse current detection before triggering SROFFT.

CRMASK[3:0]=0h: Mask time 3.2 μs

CRMASK[3:0]=x: Mask time 0.2 * (16 − x) μs

CRMASK[3:0]=Fh: Mask time 0.2 μs

MRCONF5 (Default: 00h)

ADDR	Data Name	D[7]	D[6]	D[5]	D[4]	D[3]	D[2]	D[1]	D[0]
0105h	MRCONF5	SYNCEN	PPDOSEL	FSCDT[1:0]		FSCDL[3:0]			

SYNCEN: SYNChronous rectification ENable (active low)

SYNCEN=0: Synchronous rectification is ON. (Synchronous rectification mode)

SYNCEN=1: Synchronous rectification is OFF. (Asynchronous rectification mode)

SYNCEN defines synchronous rectification mode for the output stage. In synchronous rectification mode, the high and low−side switches are always switched in complementary mode. In asynchronous rectification mode, both complementary switches may be off and the motor current is circling through the body diodes.

PPDOSEL: Pwm Problem Diagnostics Output SELection

PPDOSEL=0: Abnormal PWM input detected result is reflected to DIAG pin.

PPDOSEL=1: Abnormal PWM input detected result is not reflected to DIAG pin.

FSCDT[1:0]: Fet Short−Circuit Detection Time

FSCDT[1:0]=0h: Detection time 3.2 μs

FSCDT[1:0]=1h: Detection time 6.4 μs

FSCDT[1:0]=2h: Detection time 9.6 μs

FSCDT[1:0]=3h: Detection time 12.8 μs

By monitoring FET Vds, the time from FET's ON signal output until detecting shorted status can be set with FSCDT.

FSCDL[3:0]: Fet Short−Circuit Detection Level

FSCDL[3:0]=0h: Detection voltage 0.1 V

FSCDL[3:0]=x: Detection voltage 0.1 * (1 + x) V

FSCDL[3:0]=Fh: Detection voltage 1.6 V

MRCONF6 (Default: 00h)

ADDR	Data Name	D[7]	D[6]	D[5]	D[4]	D[3]	D[2]	D[1]	D[0]
0106h	MRCONF6	0	CPTM[3:0]				THTH[1:0]		TSTS

CPTM[3:0]: Constrained movement Protection TiMe

CPTM[3:0]=0h: Detection time 0.4 s / Restart time 3.2 s

CPTM[3:0]=x: Detection time 0.4 * (1 + x) s / Restart time 0.4 * 8 * (1 + x) s

CPTM[3:0]=Fh: Detection time 6.4 s / Restart time 51.2 s

A locked rotor protection circuit is embedded in order to protect IC and Motor during locked rotor conditions. A locked rotor is detected by counting the time the IC is in Startup mode (without BEMF detection). If no BEMF is detected for the time programmed into CPTM register, the motor is turned off and a locked rotor is flagged.

In auto−recovery mode, the motor will remain off for eight times the Open−Loop Startup Timeout before another startup is attempted.

THTH[1:0]: THreshold of THermometer

THTH[1:0]=0h: Detection voltage 0.35 V

THTH[1:0]=1h: Detection voltage 0.30 V

THTH[1:0]=2h: Detection voltage 0.25 V

THTH[1:0]=3h: Detection voltage 0.20 V

LV8961H has an embedded comparator to monitor the external power FET temperature via an external thermistor. If the voltage at TH exceeds the threshold shown in the table, the power stage is shut off and a THPO error is triggered.

TSTS: Thermal Shutdown Temperature Setting

TSTS=0: Overtemperature warning occurs at 125°C(typ), shutdown at 150°C (typ).

TSTS=1: Overtemperature warning occurs at 150°C (typ), shutdown at 175°C (typ).

The LV8961H monitors its own junction temperature to protect against overtemperature damage. Two different warning− and shutoff levels can be selected.

MRCONF7 (Default: 00h)

ADDR	Data Name	D[7]	D[6]	D[5]	D[4]	D[3]	D[2]	D[1]	D[0]
0107h	MRCONF7	WDTEN	WDTSEL[2]	WDT[5:0]					

WDTEN: WatchDog Timeout Enable

WDTEN=0: Watchdog is disabled.

WDTEN=1: Watchdog is active.

This bit can enable or disable the watchdog.

WDTSEL[2:0]: WatchDog Target duty SELection

1bit [2] of WDTSEL[2:0] register

WDTSEL[2:0]=0h,7h: Motor duty cycle 0%

WDTSEL[2:0]=1h: Motor duty cycle 25%

WDTSEL[2:0]=2h: Motor duty cycle 50%

WDTSEL[2:0]=3h: Motor duty cycle 75%

WDTSEL[2:0]=4h: Motor duty cycle 100%

WDTSEL[2:0]=5h: Motor duty cycle is indicated by TAG_L

WDTSEL[2:0]=6h: Motor duty cycle is indicated by TAG_H

If this register is set, a watchdog timeout causes Halt mode (0% drive) or Drive mode. When Drive mode is selected, the motor duty cycle is defined by this register and TAG_L, TAG_H registers.

WDT[5:0]: WatchDog Timeout duration setting

WDT[5:0]=00h: Detection time 1.6 ms

WDT[5:0]=x:Detection time 1.6 * (1 + x) ms

WDT[5:0]=3Fh: Detection time 102.4 ms

Writing 00h to register MRRST(Address = 0300h) resets the watchdog timer. When the watchdog timer reaches its end detection time, a watchdog error is issued.

MRCONF8 (Default: 00h)

ADDR	Data Name	D[7]	D[6]	D[5]	D[4]	D[3]	D[2]	D[1]	D[0]
0108h	MRCONF8	VCLVPEN	CPEN	THWEN	THPEN	FSPEN	OVPEN	OCPEN	DIAGSEL

xEN: Error and warning mask

VCLVPEN: VCc Low Voltage Protection ENable.

CPEN: Constrained movement Protection ENable.

THWEN: THermal Warning ENable.

THPEN: THermal Protection ENable.

FSPEN: Fet Short Protection ENable

OVPEN: OverVoltage Protection ENable.

OCPEN: OverCurrent Protection ENable.

The higher seven bits in this register allows enabling and disabling of various errors and warnings. Setting xEN=1 masks the error, setting xEN=0 activates the error.

DIAGSEL: DIAG polarity SELection

DIAGSEL=0: The DIAG pin is active low.

DIAGSEL=1: The DIAG pin is active high.

This bit selects the polarity of the DIAG signal.

The DIAG pin is OPEN drain.

MRCONF9 (Default: 00h)

ADDR	Data Name	D[7]	D[6]	D[5]	D[4]	D[3]	D[2]	D[1]	D[0]
0109h	MRCONF9	RCVTM[1:0]		WDTSEL[1:0]		CPLT	FSPLT	OCPLT	DLTO

RCVTM[1:0]: ReCoVery TiMe setting

RCVTM[1:0]=0h: Recovery time 0 s

RCVTM[1:0]=1h: Recovery time 5 s

RCVTM[1:0]=2h: Recovery time 10 s

RCVTM[1:0]=3h: Recovery time 20 s

IC will restart (after an abnormal rotational speed change is detected) when this recovery time elapses.

WDTSEL[1:0]: WatchDog Target duty SELection

2bit [1:0] of WDTSEL[2:0] register

See MRCONF7 register.

xPLT: Protection LaTch selection

CPLT=0: Auto recover after constrained movement detection.

CPLT=1: Latch the IC off after constrained movement detection.

FSPLT=0: Auto recover after FET short detection.

FSPLT=1: Latch the IC off after FET short detection.

OCPLT=0: Auto recover after overcurrent detection.

OCPLT=1: Latch the IC off after overcurrent detection.

Motor constraint, FET short, and overcurrent can cause intolerable large−current flow in the application. To prevent repeated current flow during retry attempts, it is possible to latch these errors.

DLTO: Diagnostics output Latched Transitions Only

DLTO=0: Trigger DIAG for any non−masked error or warning.

DLTO=1: Trigger DIAG only for latched errors as defined by above xPLTs.

MRCONF10 (Default: 00h)

ADDR	Data Name	D[7]	D[6]	D[5]	D[4]	D[3]	D[2]	D[1]	D[0]
010Ah	MRCONF10	VDHOVPEN	OOPOEN	CLDOEN	FGERACCEN	RCSMPMD	RCSMPEN	OPDTM[1:0]	

xEN: Error and warning mask

VDHOVPEN: VDH OverVoltage Protection ENable.

OOPOEN: Open cOnnector Protection Output ENable.

CLDOEN: Current Limit Detection Output ENable.

The higher three bits in this register allow enabling and disabling of various errors and warnings. Setting xEN=1 masks the error, setting xEN=0 activates the error.

FGERACCEN: Frequeny Generator ERrordetection during ACCeleration ENabled

FGERACCEN=0: FG error detection at acceleration is disabled.

FGERACCEN=1: FG error detection at acceleration is enabled

RCSMPMD: Register CheckSuM error then Power Motor Down

RCSMPMD=0: Keep motor running after checksum error detection.

RCSMPMD=1: Power down motor after checksum error detection.

Register checksum error information is always output to DIAG when RCSMEN register is set, and it is independent of RCSMPMD setting.

RCSMPEN: Register CheckSuM Periodical at running motor ENable

RCSMPEN=0: Register checksum calculation is done at following timing.

- Device startup
- Writing OTP
- OTP download by writing MRODL=00h

RCSMPEN=1: Register checksum calculation is done at following timing.

- Device startup
- Writing OTP
- OTP download by writing MRODL=00h
- 1 ms periodically at motor running

OPDTM[1:0]: OPen connector Detection TiMe selection

OPDTM[1:0]=0h: Detection time 160 μs

OPDTM[1:0]=1h: Detection time 320 μs

OPDTM[1:0]=2h: Detection time 640 μs

OPDTM[1:0]=3h: Detection time 1280 μs

When the motor cannot be started for a certain period of time and it is in the startup mode, this IC flows current to each coil, then determines IC is in a constraint state when current flows, or an open state when no current flows. The detection time for the current to flow can be selected by OPDTM.

MRCONF11 (Default: 00h)

ADDR	Data Name	D[7]	D[6]	D[5]	D[4]	D[3]	D[2]	D[1]	D[0]
010Bh	MRCONF11	INIODUTYMD	INITAGMD	CLREFEN_ROT	CLREFEN_STOP	ATSYNCOFF	0	STSYNCEN	SPIINSEL

INIODUTYMD: INItial Output DUTY cycle MoDe (soft start function)

INIODUTYMD=0: Input PWM duty

INIODUTYMD=1: Ramp up from 0%

INITAGMD: INItial max. TArGet output duty cycle MoDe

INITAGMD=0: Input PWM duty

INITAGMD=1: PDTSEL setting

CLREFEN_ROT: Current Limit REFerence ENable (free ROTating status)

CLREFEN_ROT=0: Disable current ramp (soft start) in free−run status.

CLREFEN_ROT=1: Enable current ramp (soft start) in free−run status.

CLREFEN_STOP: Current Limit REFerence ENable (STOP status)

CLREFEN_STOP=0: Disable disable current ramp (soft start) in stop status.

CLREFEN_STOP=1: Enable current ramp (soft start) in stop status.

ATSYNCOFF: AuTomatic SYNChronous rectification OFF (active low)

This bit activates the automatic disabling of synchronous rectification.

ATSYNCOFF=0: Automatic synchronous rectification off function is enabled.

ATSYNCOFF=1: Automatic synchronous rectification off function is disabled.

STSYNCEN: SoftSTart SYNChronous rectification ENable (active low)

STSYNCEN=0: Synchronous rectification at soft start depends on SYNCEN.

STSYNCEN=1: Synchronous rectification at soft start is forced off.

SPIINSEL: duty cycle through SPI INput SELection

SPIINSEL=0: Input duty from pin. (HVPIN/LVPIN)

SPIINSEL=1: Input duty from PWMDTIN register (concatenation of MRCTL1[1:0] and MRCTL0[7:0]).

MRCONF12 (Default: 00h)

ADDR	Data Name	D[7]	D[6]	D[5]	D[4]	D[3]	D[2]	D[1]	D[0]
010Ch	MRCONF12	FGERDECEN	FGERDEC[2:0]			FGERACC[3:0]			

FGERDECEN: Frequeny Generator ERrordetection during DECeleration ENable

FGERDECEN=0: FG error detection at deceleration is disabled.

FGERDECEN=1: FG error detection at deceleration is enabled

FGERDEC[2:0]: Frequeny Generator ERrordetection during DECeleration setting

FGERDEC[2:0]=0h: Limit of zero−cross detection time is (previous 60 electrical degrees period) * 1.25.

FGERDEC[2:0]=1h: Limit of zero−cross detection time is (previous 60 electrical degrees period) * 1.5.

FGERDEC[2:0]=2h: Limit of zero−cross detection time is (previous 60 electrical degrees period) * 1.75.

FGERDEC[2:0]=3h: Limit of zero−cross detection time is (previous 60 electrical degrees period) * 2.

FGERDEC[2:0]=4h: Limit of zero−cross detection time is (previous 60 electrical degrees period) * 3.

FGERDEC[2:0]=5h: Limit of zero−cross detection time is (previous 60 electrical degrees period) * 4.

FGERDEC[2:0]=6h: Limit of zero−cross detection time is (previous 60 electrical degrees period) * 6.

FGERDEC[2:0]=7h: Limit of zero−cross detection time is (previous 60 electrical degrees period) * 8.

FGERACC[3:0]: Frequeny Generator ERrordetection during ACCeleration setting

FGERACC[3:0]=0h:1 time detecting zero−cross of BEMF when the moment the Mask signal is opened.

FGERACC[3:0]=x: (1 + x) consecutive time detecting zero−cross of BEMF when the moment the Mask signal is opened.

FGERACC[3:0]=Fh: 16 consecutive time detecting zero−cross of BEMF when the moment the Mask signal is opened.

MRCONF13 (Default: 00h)

ADDR	Data Name	D[7]	D[6]	D[5]	D[4]	D[3]	D[2]	D[1]	D[0]
010Dh	MRCONF13	0	DWNSET	PDTSEL[1:0]		FSPDTM[1:0]		OVPMASK[1:0]	

DWNSET: slowDoWN SETting

DWNSET=0: Normal mode

DWNSET=1: Synchronous rectification OFF mode

During speed control mode, motor deceleration can lead to energy recuperation and temporary voltage spikes. DWNSET allows for various degrees of energy recuperation:

- Normal Mode
  Results in a tightest control and maximum energy recuperation. The application circuit has to be able to absorb the energy generated.
- Synchronous rectification OFF Mode
  The motor is essentially not driven until it has reached the target speed. This does not feed any energy back into the supply, but may take a long time if motor inertia is high and losses are low.

PDTSEL[1:0]: Pending Detection of a Transition SELection

PDTSEL[1:0]=0h: Motor duty cycle 25%

PDTSEL[1:0]=1h: Motor duty cycle 50%

PDTSEL[1:0]=2h: Motor duty cycle 75%

PDTSEL[1:0]=3h: Motor duty cycle 100%

If PDTC is set, the motor is driven with the duty cycle programmed into PDTSEL, as soon as EN is high.

This feature is bridging the initial 200 ms of operation until a valid PWM duty cycle can be decoded.

FSPDTM[1:0]: Fet Short Protection Debounce TiMe setting

FSPDTM[1:0]=0h: Debounce time 1.6 μs

FSPDTM[1:0]=1h: Debounce time 3.2 μs

FSPDTM[1:0]=2h: Debounce time 4.8 μs

FSPDTM[1:0]=3h: Debounce time 6.4 μs

OVPMASK[1:0]: OverVoltage Protection MASKing time

The time to detect overvoltage condition on VS and VDH can be set by OVPMASK.

OVPMASK[1:0]=0h: Detection time 0.8 μs

OVPMASK[1:0]=1h: Detection time 1.6 μs

OVPMASK[1:0]=2h: Detection time 3.2 μs

OVPMASK[1:0]=3h: Detection time 6.4 μs

MRCONF14 (Default: 00h)

ADDR	Data Name	D[7]	D[6]	D[5]	D[4]	D[3]	D[2]	D[1]	D[0]
010Eh	MRCONF14	RCSM [7:0]							

RCSM[7:0]: Register CheckSuM

This register is the data downloaded from OTP memory ORCONF34. Basically, users don't need to care of it.

MRCONF15 (Default: 00h)

ADDR	Data Name	D[7]	D[6]	D[5]	D[4]	D[3]	D[2]	D[1]	D[0]
010Fh	MRCONF15	0	0	0	SSCGEN	SSCGCN[1:0]		Internal use	

SSCGEN: Spread Spectrum Charge pump Generation ENable

SSCGEN=0: Spread spectrum is OFF.

SSCGEN=1: Spread spectrum is ON.

The Charge pump may have radiation noise issues due to switching at 52.1 kHz(typ). By activating SSCG it is possible to disperse frequency components of the charge pump switching frequency.

SSCGCN[1:0]: Spread Spectrum Charge pump Generation Clock Number

SSCGCN[1:0]=0h: Change CPCLK frequency every 1 clock.

SSCGCN[1:0]=1h: Change CPCLK frequency every 2 clocks.

SSCGCN[1:0]=2h: Change CPCLK frequency every 4 clocks.

SSCGCN[1:0]=3h: Change CPCLK frequency every 8 clocks.

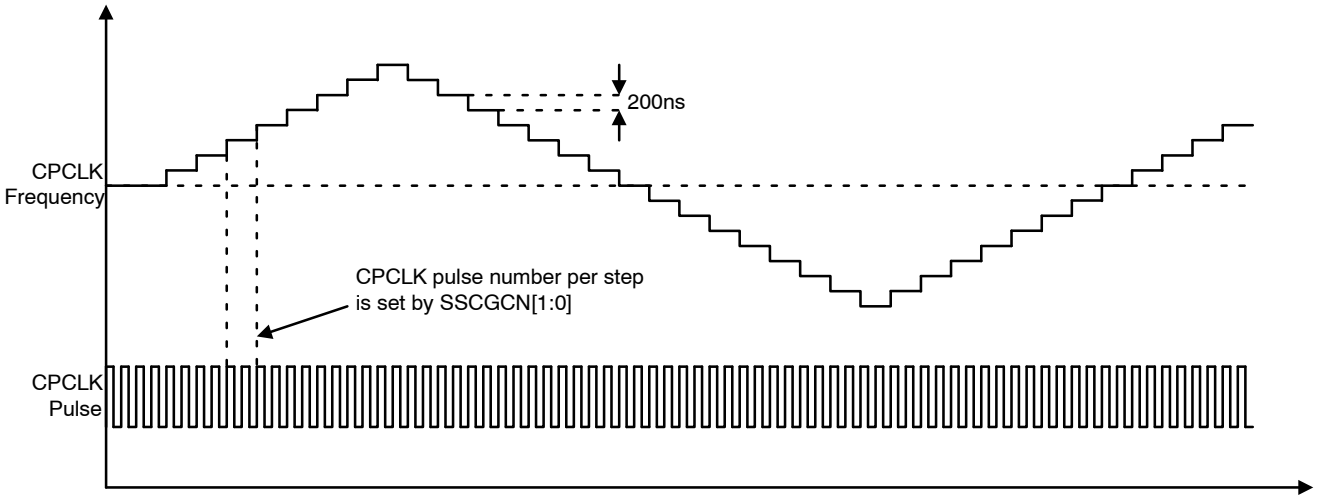

Figure 21.

SYSTEM DIAGNOSTICS AND TEST REGISTER OVERVIEW

Write Enable	Limitation by OBSY	ADDR	Data Name	D[7]	D[6]	D[5]	D[4]	D[3]	D[2]	D[1]	D[0]
Read−Only	Read−Only	0200h	MRACS	0	0	0	0	0	RCSMEN	OSAENB	MSAENB
		0201h	MRDIAG0	CPO	THPO	FSPO	VGLLVPO	CHPLVPO	VSOVPO	VSLVPO	OCPO
		0202h	MRDIAG1	PWMPO	VCLVPO	RCSMPO	OOPO	CLDO	WDTPO	THSPO	THWPO
		0203h	MRDIAG2	0	0	OTPAZ	REGAZ	FGERPO	SPCO	STUPO	VDHOVPO
		0204h	MRDIAG3	0	0	0	0	0	0	CHPOVPO	CRDTO
		0205h	MRSTAT0	STATUS[7:0]							
		0206h	MRSTAT1	STATUS[15:8]							
		0207h	MRSTAT2	STATUS[23:16]							
Always OK	Always OK	0300h	MRRST	Write 00h: Reset WDT / Write 55h Reset Register Checksum Error / Write FFh: Reset latch off							
		0301h	MRCTL0	PWMDTIN[7:0]							
		0302h	MRCTL1	BRK	0	0	0	0	0	PWMDTIN[9:8]	
		0303h	MRCTL2	Internal use							
		0304h	MRCTL3	Internal use							
		0305h	MRCTL4	0	0	0	0	0	0	Internal use	
		0306h	MRCTL5	0	0	0	0	STATSEL[3:0]			
		0307h	MRCTL6	BAREG[7:0]							
		0308h	MRCTL7	BAREG[15:8]							
EN=L	OBSY=L	0400h	MRODL	Write 00h: Execute OTP data download, Write FFh: Execute register checksum calculation							
		0401h	MRORB	0	0	0	0	0	0	ORBEN	ORBLV

MRACKS

ADDR	Data Name	D[7]	D[6]	D[5]	D[4]	D[3]	D[2]	D[1]	D[0]
0200h	MRACS	0	0	0	0	0	RCSMEN	OSAENB	MSAENB

This data, which is a read−only register, is downloaded from OTP memory ORCONF33.

<*BR*>

RCSMEN: Register CheckSuM ENable

RCSMEN=0: Register checksum diagnostic function is disabled.

RCSMEN=1: Register checksum diagnostic function is enabled

OSAENB: Otp registers Spi Access ENable Bar (Disable)

OSAENB=0: Write access permitted.

OSAENB=1: Write access denied.

OSAENB controls write access to the OTP registers.

MSAENB: Main registers Spi Access ENable Bar (Disable)

MSAENB=0: Write access permitted.

MSAENB=1: Write access denied.

MSAENB controls write access to the main registers.

MRDIAG0

ADDR	Data Name	D[7]	D[6]	D[5]	D[4]	D[3]	D[2]	D[1]	D[0]
0201h	MRDIAG0	CPO	THPO	FSPO	VGLLVPO	CHPLVPO	VSOVPO	VSLVPO	OCPO

CPO: Constrained movement Protection Output

CPO=0: Normal

CPO=1: Detect locked rotor error

No BEMF was detected during the entire open−loop startup time as programmed in CPTM. Either the rotor is blocked, or startup parameters are not correct. The drivers are disabled.

THPO: fet THermal Protection Output

THPO=0: Normal

THPO=1: Detect FET thermal error

FSPO: Fet Short Protection Output

FSPO=0: Normal

FSPO=1: Detect FET short error

The drain−source voltage threshold across one of the external power FETs has been exceeded during operation. The threshold voltage is programmed in register FSCDL. Errors are suppressed for a blanking time as programmed in register FSCDT, both in register MRCONF5.

For the high−side FETs this voltage is measured between pin VS and the corresponding phase connection UOUT, VOUT, WOUT. For the low−side FETs it is measured between the phase connection and the pins SUL, SVL and SWL. Make sure to minimize potential voltage drops in the sense paths.

VGLLVPO: VGL Low Voltage Protection Output

VGLLVPO=0: Normal

VGLLVPO=1: Detect VGL undervoltage error

The voltage at VGL has dropped below 5.5 V (max). The drivers are disabled to protect against low gate enhancement.

CHPLVPO: CHarge Pump Low Voltage Protection Output

CHPLVPO=0: Normal

CHPLVPO=1: Detect CHP low voltage error

The voltage between VS and VCP has dropped below 5.5 V (max). The drivers are disabled to protect against low gate enhancement.

VSOVPO: VS OverVoltage Protection Output

VSOVPO=0: Normal

VSOVPO=1: Detect VS over voltage error

The voltage at VS has exceeded 28 V (min). The driver stage and the charge pump are disabled to protect against overvoltage at the charge pump.

VSLVPO: VS Low Voltage Protection Output

VSLVPO=0: Normal

VSLVPO=1: Detect VS undervoltage error

The voltage at VS has fallen below 5.1 V (max). The driver stage is disabled to protect against internal threshold issues.

OCPO: OverCurrent Protection Output

OCPO=0: Normal

OCPO=1: Detect overcurrent error

The voltage between current sense pins RFSENS and RF has exceeded overcurrent threshold voltage for longer than the overcurrent limit mask time programmed in register OCMASK in MRCONF3. The driver stage is disabled to protect against damage.

MRDIAG1

ADDR	Data Name	D[7]	D[6]	D[5]	D[4]	D[3]	D[2]	D[1]	D[0]
0202h	MRDIAG1	PWMPO	VCLVPO	RCSMPO	OOPO	CLDO	WDTPO	THSPO	THWPO

PWMPO: PWM input abnormal Protection Output

PWMPO=0: Normal

PWMPO=1: Detect PWM input error

The PWM input does not oscillate with the appropriate frequency or is steady high (100%) or low (0%). Depending on the settings FLSEL, ZPSEL in MRCONF1, the driver stage will turn off, or operate at a predefined duty cycle (emergency mode).

VCLVPO: VCc Low Voltage Protection Output

VCLVPO=0: Normal

VCLVPO=1: Detect VCC undervoltage error

VCC undervoltage error. Depending on the setting of REGSEL in MRCONF0, VCC is either 5 V (typ) or 3.3 V (typ). Undervoltage is flagged if VCC falls below 4.2 V (max) or 2.7 V (max) respectively.

RCSMPO: Register CheckSuM Protection Output

RCSMPO=0: Normal

RCSMPO=1: Detect register checksum error

RCSMPO is set when EN=1, RCSMEN=1, RCSMPEN=1 and register checksum error is detected. If RCSMPMD is set, the driver stage will be off.

RCSMPO is cleared by writing 55h to register MRRST.

OOPO: Open cOnnector Protection Output

OOPO=0: Normal

OOPO=1: Detect open connector

CLDO: Current Limit Detection Output

CLDO=0: Normal

CLDO=1: Detect current limitation

WDTPO: WatchDog Timer Protection Output

WDTPO=0: Normal

WDTPO=1: Detect WDT error

The watchdog has timed out. This flag will be high if the watchdog was not reset during the time defined by register WDT in MRCONF7. If the watchdog is enabled the driver stage will either be off or run in emergency mode with the settings defined by register WDTSEL in MRCONF7, MRCONF9.

Flag WDTPO is high even if the watchdog is disabled.

THSPO: THermal Shutdown Protection Output

THSPO=0: Normal

THSPO=1: Detect thermal shutdown error

The IC temperature is too high and the drivers are shut off. The overtemperature shutoff level is defined by TSTS in MRCONF6 to be either 150°C (min.) or 175°C (min.).

THWPO: THermal Warning Protection Output

THWPO=0: Normal

THWPO=1: Detect thermal warning error

The IC temperature has exceeded the warning level. The overtemperature warning level is defined by TSTS in MRCONF6 to be either 125°C (min.) or 150°C (min.).

MRDIAG2

ADDR	Data Name	D[7]	D[6]	D[5]	D[4]	D[3]	D[2]	D[1]	D[0]
0203h	MRDIAG2	0	0	OTPAZ	REGAZ	FGERPO	SPCO	STUPO	VDHOVPO

OTPAZ: OTP All bits Zero

OTPAZ=0: OTP contains at least one zapped bit.

OTPAZ=1: Detect that OTP output is all 0.

REGAZ: otp REGister All bits Zero

REGAZ=0: Registers which data is downloaded from OTP contains at least 1−bit one.

REGAZ=1: Detect that registers which data is downloaded from OTP is all 0.

FGERPO: Frequency Generator ERror Protection Output

FGERPO=0: The absolute value of the speed error is not detected under FGERACC/FGERRDEC conditions.

FGERPO=1: The absolute value of the speed error is detected under FGERACC/FGERRDEC conditions.

SPCO: SPeed Control error Output

SPCO=0: The absolute value of the speed error is equal to or less than target * 1/16.

SPCO=1: The absolute value of the speed error is greater than target * 1/16.

STUPO: bemf−less STartUp Period Output

STUPO=0: BEMF has been detected.

STUPO=1: No BEMF has been detected, yet.

This flag indicates open−loop startup operation.

VDHOVPO: VDH OverVoltage Protection Output

VDHOVPO=0: Normal

VDHOVPO=1: Detect VDH over voltage error

MRDIAG3

ADDR	Data Name	D[7]	D[6]	D[5]	D[4]	D[3]	D[2]	D[1]	D[0]
0204h	MRDIAG3	0	0	0	0	0	0	CHPOVPO	CRDTO

CHPOVPO:CHarge Pump OverVoltage Protection Output

CHPOVPO=0:Normal

CHPOVPO=1: Detect charge pump overvoltage error

CRDTO: Current Reversed Detection Output

CRDTO=0: Normal

CRDTO=1: Detect reverse current

MRSTAT0 (Default: 00h)

ADDR	Data Name	D[7]	D[6]	D[5]	D[4]	D[3]	D[2]	D[1]	D[0]
0205h	MRSTAT0	STATUS[7:0]							

MRSTAT1 (Default: 00h)

ADDR	Data Name	D[7]	D[6]	D[5]	D[4]	D[3]	D[2]	D[1]	D[0]
0206h	MRSTAT1	STATUS[15:8]							

MRSTAT2 (Default: 00h)

ADDR	Data Name	D[7]	D[6]	D[5]	D[4]	D[3]	D[2]	D[1]	D[0]
0207h	MRSTAT2	STATUS[23:16]							

STATUS[23:0]: internal STATUS output

Output of STATUS register is selected by STATSEL register in MRCTL5.

2nd and 3rd bytes are hold at temporary register when 1st byte is read to keep simultaneity of status data.

MRCSMSD

ADDR	Data Name	D[7]	D[6]	D[5]	D[4]	D[3]	D[2]	D[1]	D[0]
0208h	MRCSMSD	RCSMSD[7:0]							

RCSMSD[7:0]: Register CheckSuM SeeD

This register gives checksum code of the hidden registers whose data are downloaded from OTP memory. This register value will be used as a calculation seed of checksum (ORCONF34) for user area of OTP memory, to include both hidden and user area of the OTP memory. How to activate the register checksum feature as well as the usage of this register RCSMSD is described in the section "Register Checksum Feature".

MRRST

ADDR	Data Name	D[7]	D[6]	D[5]	D[4]	D[3]	D[2]	D[1]	D[0]
0300h	MRRST	Write 00h: Reset WDT / Write 55h Reset register checksum error / Write FFh: Reset latch off							

MRRST[7:0]: Reset for WDT and latch off by protection

Write MRRST[7:0]=00h: Reset WDT

Write MRRST[7:0]=55h: Reset driver off by register checksum error

Write MRRST[7:0]=FFh: Reset latch off

Write MRRST[7:0]=others: No operation

MRCTL0 (Default: 00h)

ADDR	Data Name	D[7]	D[6]	D[5]	D[4]	D[3]	D[2]	D[1]	D[0]
0301h	MRCTL0	PWMDTIN[7:0]							

MRCTL1 (Default: 00h)

ADDR	Data Name	D[7]	D[6]	D[5]	D[4]	D[3]	D[2]	D[1]	D[0]
0302h	MRCTL1	BRK	0	0	0	0	0	PWMDTIN[9:8]	

BRK: short BRaKe enable

BRK=0: Short brake is disabled.

BRK=1: Short brake is enabled.

Note that when short brake is executed, an overcurrent flows due to the electromotive force generated when the motor rotates.

PWMDTIN[9:0]: PWM DuTy cycle INput register

PWMDTIN[9:0]=000h: Duty cycle 0% to 0.098%

PWMDTIN[9:0]=x: Duty cycle (x * 100 / 1024) % to ((x+1) * 100 / 1024) %

PWMDTIN[9:0]=3FFh: Duty cycle 99.9% to 100%

MRCTL5 (Default: 00h)

ADDR	Data Name	D[7]	D[6]	D[5]	D[4]	D[3]	D[2]	D[1]	D[0]
0306h	MRCTL5	0	0	0	0	STATSEL[3:0]			

STATSEL[3:0]: STATus data SELection

STATSEL selects status data output to STATUS[23:0] (concatenation of MRSTAT2[7:0], MRSTAT1[7:0] and MRSTAT0[7:0]).

STATUS[23:8] are latched when STATUS[7:0] is read.

If STATSEL is changed before reading STATUS[23:8], they hold value which is indicated by previous STATSEL until STATUS[7:0] will be read.

If STATUS[23:8] is read soon after reset, they returns 0000h.

STATUS Register Description

Users can know various operation status, such as rotation period/frequency, input duty cycle, PWM output period, lead angle control etc. by reading out the register STATUS[23:0] which is divided into three bytes and stored in the address 0205h to 0207h. The register STATSEL[3:0] stored in the address 0306h determines which status parameter is allocated to the STATUS register. When read access to the address 0205h (first byte of STATUS [23:0]) was initiated, the register data in the following address 0206h and 0207h will not change during the sequential read access to these addresses so that the simultaneity of three bytes which form STATSEL[23:0] is secured.

STATUS REGISTER DESCRIPTION

ADDR	Data Name	D[7]	D[6]	D[5]	D[4]	D[3]	D[2]	D[1]	D[0]
0205h	MRSTAT0	STATUS[7:0]							
0206h	MRSTAT1	STATUS[15:8]							
0207h	MRSTAT2	STATUS[23:16]							
0306h	MRCTL5	0	0	0	0	STATSEL[3:0]			

STATUS Register Map

All data which can be read from STATUS register are assigned as following table.

STATUS REGISTER DESCRIPTION

STATSEL[3:0]		D[7]	D[6]	D[5]	D[4]	D[3]	D[2]	D[1]	D[0]
0h	MRSTAT0	PROT_T[7:0]							
	MRSTAT1	PROT_T[15:8]							
	MRSTAT2	0	0	0	0	PROT_T[19:16]			
1h	MRSTAT0	PROT_F[7:0]							
	MRSTAT1	0	PROT_F[14:8]						
2h	MRSTAT0	IDUTY_IDUTY[7:0]							
	MRSTAT1	0	0	0	0	0	0	IDUTY_IDUTY[9:8]	
3h	MRSTAT0	PWMPCNT_LT[7:0]							
	MRSTAT1	PWMPCNT_LT[15:8]							
	MRSTAT2	0	0	PWMPCNT_LT[21:16]					
4h	MRSTAT0	PWMHCNT_LT[7:0]							
	MRSTAT1	PWMHCNT_LT[15:8]							
	MRSTAT2	0	0	PWMHCNT_LT[21:16]					
5h	MRSTAT0	TAG1[7:0]							
	MRSTAT1	0	TAG1[14:8]						
6h	MRSTAT0	PIDOLT[7:0]							
	MRSTAT1	0	0	0	0	0	0	PIDOLT[9:8]	
7h	MRSTAT0	LACTL_EPOS[7:0]							
8h	MRSTAT0	0	0	0	0	NO_OPEN	OPEN_W	OPEN_V	OPEN_U
9h	MRSTAT0	REGCRC_RSLT[7:0]							
Ah	MRSTAT0	ODUTYMAX[7:0]							
	MRSTAT1	0	0	0	0	0	0	ODUTYMAX[9:8]	
Bh	MRSTAT0	0	0	0	LANUM0[4:0]				
Ch	MRSTAT0	0	0	0	LANUM1[4:0]				

STATUS REGISTER DESCRIPTION

STATSEL[3:0]		D[7]	D[6]	D[5]	D[4]	D[3]	D[2]	D[1]	D[0]
Dh	MRSTAT0	0	0	0	0	0	WNDCHNG_EN	BEMFEN	HIZON
Eh	MRSTAT0	TAG0[7:0]							
	MRSTAT1	OPENLX0	TAG0[14:8]						

STATSEL = 0h

STATUS	D[7]	D[6]	D[5]	D[4]	D[3]	D[2]	D[1]	D[0]
[7:0]: MRSTAT0	PROT_T[7:0]							
[15:8]: MRSTAT1	PROT_T[15:8]							
[23:16]: MRSTAT2	0	0	0	0	PROT_T[19:16]			

STATSEL = 1h

STATUS[23:0]	D[7]	D[6]	D[5]	D[4]	D[3]	D[2]	D[1]	D[0]
[7:0]: MRSTAT0	PROT_F[7:0]							
[15:8]: MRSTAT1	0	PROT_F[14:8]						
[23:16]: MRSTAT2	0	0	0	0	0	0	0	0

PROT_T[19:0]: Period of ROTation (Time)

PROT_F[15:0]: Period of ROTation (Frequency)

These registers offer speed feedback for use in an external speed control loop.

$$\text{Rotation Period T (sec)} = \text{PROT_T} \times \frac{1}{500\ \text{kHz}} \times 2 = \frac{60}{\text{PROT_F (Hz)}}$$

Example 1)
PROT_T = 625 → PROT_F = 24000 (RPM, upper limit)

Example 2)
PROT_T = 768432 → PROT_F = 19 (RPM)

STATSEL = 2h

STATUS[23:0]	D[7]	D[6]	D[5]	D[4]	D[3]	D[2]	D[1]	D[0]
[7:0]: MRSTAT0	IDUTY_IDUTY[7:0]							
[15:8]: MRSTAT1	0	0	0	0	0	0	IDUTY_IDUTY[9:8]	
[23:16]: MRSTAT2	0	0	0	0	0	0	0	0

IDUTY_IDUTY[9:0]: Input DUTY cycle

IDUTY_IDUTY[9:0] = 000h: Input duty cycle = 1/1024

IDUTY_IDUTY[9:0] = 3FFh: Input duty cycle = 1024/1024 (100%)

STATSEL = 3h

STATUS[23:0]	D[7]	D[6]	D[5]	D[4]	D[3]	D[2]	D[1]	D[0]
[7:0]: MRSTAT0	PWMPCNT_LT[7:0]							
[15:8]: MRSTAT1	PWMPCNT_LT[15:8]							
[23:16]: MRSTAT2	0	0	PWMPCNT_LT[21:16]					

STATSEL = 4h

STATUS[23:0]	D[7]	D[6]	D[5]	D[4]	D[3]	D[2]	D[1]	D[0]
[7:0]: MRSTAT0	PWMHCNT_LT[7:0]							
[15:8]: MRSTAT1	PWMHCNT_LT[15:8]							
[23:16]: MRSTAT2	0	0	PWMHCNT_LT[21:16]					

PWMHCNT_LT[21:0]: PWM input High CouNT (LaTched)

PWMPCNT_LT[21:0]: PWM input Period CouNT (LaTched)

$$\text{IDUTY_IDUTY} = \frac{\text{PWMHCNT_LT}}{\text{PWMPCNT_LT}} \times 1024$$

STATSEL = 5h

STATUS[23:0]	D[7]	D[6]	D[5]	D[4]	D[3]	D[2]	D[1]	D[0]
[7:0]: MRSTAT0	TAG1[7:0]							
[15:8]: MRSTAT1	0	TAG1[14:8]						
[23:16]: MRSTAT2	0	0	0	0	0	0	0	0

TAG1[14:0]: TArGet speed/output duty cycle 1 (control input)

TAG1[14:0] = 0000h: Output duty cycle = 0% (Target speed = 0 RPM)

TAG1[14:0] = 7FFFh: Output duty cycle = MAX (Target speed limit)

STATSEL = 6h

STATUS[23:0]	D[7]	D[6]	D[5]	D[4]	D[3]	D[2]	D[1]	D[0]
[7:0]: MRSTAT0	PIDOLT[7:0]							
[15:8]: MRSTAT1	0	0	0	0	0	0	PIDOLT[9:8]	
[23:16]: MRSTAT2	0	0	0	0	0	0	0	0

PIDOLT[9:0]: PI calculated Duty cycle Output resuLT

PIDOLT[9:0] = 000h: Output PWM duty cycle = 0%

PIDOLT[9:0] = 3FFh: Output PWM duty cycle = 100%

STATSEL = 7h

STATUS[23:0]	D[7]	D[6]	D[5]	D[4]	D[3]	D[2]	D[1]	D[0]
[7:0]: MRSTAT0	LACTL_EPOS[7:0]							
[15:8]: MRSTAT1	0	0	0	0	0	0	0	0
[23:16]: MRSTAT2	0	0	0	0	0	0	0	0

LACTL_EPOS[7:0]: Lead Angle ConTroL Energizing POSition
(00h ≤ LACTL_EPOS[7:0] ≤ BFh)

LACTL_EPOS[7:0] = 00h: Energizing position = 0 deg

LACTL_EPOS[7:0] = x: Energizing position = (x * 1.875) deg

LACTL_EPOS[7:0] = BFh: Energizing position = 358.125 deg

STATSEL = 8h

STATUS[23:0]	D[7]	D[6]	D[5]	D[4]	D[3]	D[2]	D[1]	D[0]
[7:0]: MRSTAT0	0	0	0	0	NO_OPEN	OPEN_W	OPEN_V	OPEN_U
[15:8]: MRSTAT1	0	0	0	0	0	0	0	0
[23:16]: MRSTAT2	0	0	0	0	0	0	0	0

NO_OPEN: NO OPEN phases detected
NO_OPEN = 0: *At least one open phase connector*
NO_OPEN = 1: All phase connectors are connected

OPEN_W: OPEN W phase (active low)
OPEN_W = 0: W phase connecter is open
OPEN_W = 1: W phase connecter is connected

OPEN_V: OPEN V phase (active low)
OPEN_V = 0: V phase connecter is open
OPEN_V = 1: V phase connecter is connected

OPEN_U: OPEN U phase (active low)
OPEN_U = 0: U phase connecter is open
OPEN_U = 1: U phase connecter is connected

STATSEL = 9h

STATUS[23:0]	D[7]	D[6]	D[5]	D[4]	D[3]	D[2]	D[1]	D[0]
[7:0]: MRSTAT0	REGCRC_RSLT[7:0]							
[15:8]: MRSTAT1	0	0	0	0	0	0	0	0
[23:16]: MRSTAT2	0	0	0	0	0	0	0	0

REGCRC_RSLT: REGister CRC ReSuLT
The remainder of CRC calculation performed on the OTP registers is stored in REGCRC_RSLT [7:0].

STATSEL = Ah

STATUS[23:0]	D[7]	D[6]	D[5]	D[4]	D[3]	D[2]	D[1]	D[0]
[7:0]: MRSTAT0	ODUTYMAX[7:0]							
[15:8]: MRSTAT1	0	0	0	0	0	0	ODUTYMAX[9:8]	
[23:16]: MRSTAT2	0	0	0	0	0	0	0	0

ODUTYMAX[9:0]: Output DUTY cycle MAXimum
ODUTYMAX[9:0] = 000h: Duty = 0 %
ODUTYMAX[9:0] = x: Maximum output duty = 0.09766 * x %

ODUTYMAX[9:0] = 3FFh: Maximum output duty = 99.902 %

ODUTYMAX limits the duty range of U/V/W output.

STATSEL = Bh

STATUS[23:0]	D[7]	D[6]	D[5]	D[4]	D[3]	D[2]	D[1]	D[0]
[7:0]: MRSTAT0	0	0	0	LANUM0[4:0]				
[15:8]: MRSTAT1	0	0	0	0	0	0	0	0
[23:16]: MRSTAT2	0	0	0	0	0	0	0	0

LANUM0[4:0]: Lead Angle Number 0 (output monitor)
LANUM0[4:0] = 00h: Duty = 0 deg
LANUM0[4:0] = x: Maximum output duty = 1.875 * x deg

LANUM0[4:0] = 1Fh: Maximum output duty = 58.125 deg

LANUM0 is the actual lead angle based on the output duty cycle.

STATSEL = Ch

STATUS[23:0]	D[7]	D[6]	D[5]	D[4]	D[3]	D[2]	D[1]	D[0]
[7:0]: MRSTAT0	0	0	0	LANUM1[4:0]				
[15:8]: MRSTAT1	0	0	0	0	0	0	0	0
[23:16]: MRSTAT2	0	0	0	0	0	0	0	0

LANUM1[4:0]: Lead Angle Number 1 (control input)

LANUM1[4:0] = 00h: Duty = 0 deg

LANUM1[4:0] = x: Maximum output duty = 1.875 * x deg

LANUM1[4:0] = 1Fh: Maximum output duty = 58.125 deg

LANUM1 is the target lead angle value which characteristics are determined based on the output duty cycle and the setting of LASET_L, LASET_H, and LASET_LIM.

STATSEL = Dh

STATUS[23:0]	D[7]	D[6]	D[5]	D[4]	D[3]	D[2]	D[1]	D[0]
[7:0]: MRSTAT0	0	0	0	0	0	WNDCHNG_EN	BEMFEN	HIZON
[15:8]: MRSTAT1	0	0	0	0	0	0	0	0
[23:16]: MRSTAT2	0	0	0	0	0	0	0	0

WNDCHNG_EN: WiNDow mode CHaNGe ENabled

WNDCHNG_EN = 0: Window selection according to WINDSEL is disabled

WNDCHNG_EN = 1: Window selection according to WINDSEL is enabled

WNDCHNG_EN is the internal state monitor which indicates whether window number change is enabled or not.

BEMFEN: BEMF detection ENabled

BEMFEN = 0: BEMF zero−cross detection is disabled

BEMFEN = 1: BEMF zero−cross detection is enabled

BEMFEN is the internal state monitor which indicates whether BEMF zero−cross detection is enabled or not.

HIZON: HIgh Z state ON (active)

HIZON = 0: Not in High Z window

HIZON = 1: In High Z window

HIZON is the internal state monitor which indicates whether now in the High Z state or not.

STATSEL = Eh

STATUS[23:0]	D[7]	D[6]	D[5]	D[4]	D[3]	D[2]	D[1]	D[0]
[7:0]: MRSTAT0	TAG0[7:0]							
[15:8]: MRSTAT1	OPENLX0	TAG0[14:8]						
[23:16] : MRSTAT2	0	0	0	0	0	0	0	0

TAG0[7:0]: TArGet speed/output duty cycle 0 (output monitor)

TAG0[14:0] = 0000h: Output duty = 0% (Target speed = 0 RPM)

TAG0[14:0] = 7FFFh: Output duty = MAX (Target speed limit)

OPENLX0: OPEN Loop condition for tag0 (active low)

OPENLX0 = 0: TAG0 is generated under Open−loop condition

OPENLX0 = 1: TAG0 is generated under Closed−loop condition

MRCTL6 (Default: 00h)

ADDR	Data Name	D[7]	D[6]	D[5]	D[4]	D[3]	D[2]	D[1]	D[0]
0307h	MRCTL6	BAREG[7:0]							

MRCTL7 (Default: 00h)

ADDR	Data Name	D[7]	D[6]	D[5]	D[4]	D[3]	D[2]	D[1]	D[0]
0308h	MRCTL7	BAREG[15:8]							

BAREG[15:0]: Base Address REGister (short format access)

This register value is used as register address when BASEL[3:0] field of SPI format is set to Fh.

MRODL

ADDR	Data Name	D[7]	D[6]	D[5]	D[4]	D[3]	D[2]	D[1]	D[0]
0400h	MRODL	ODL[7:0] Write 00h: Execute OTP data download, Write FFh: Execute Register checksum calculation							

ODL[7:0]: Otp DownLoad and checksum

Write ODL[7:0]=00h: Execute OTP data download

Write ODL[7:0]=FFh: Execute register checksum calculation

Write ODL[7:0]=others: No operation

A write access of 00h to this register initiates a copy operation of OTP data to the main register. This register is blocked if OBSY is high.

MRORB (Default: 00h)

ADDR	Data Name	D[7]	D[6]	D[5]	D[4]	D[3]	D[2]	D[1]	D[0]
0401h	MRORB	0	0	0	0	0	0	ORBEN	ORBLV

ORBEN: Otp Read Bias check ENable

ORBEN=0: Normal mode

ORBEN=1: OTP bias read mode (Margin read mode)

ORBLV: Otp Read Bias check LeVel

ORBLV=0: OTP low bias read mode (low level margin check) at ORBEN=1

ORBLV=1: OTP high bias read mode (high level margin check) at ORBEN=1

This register modifies the OTP readout threshold. After programming the OTP registers should be verified by reading them with the readout thresholds set low and high to detect false zeros and ones

OTP Register

The OTP Registers contain the default values of the system registers. These registers are always readable via SPI in either Standby or Normal modes. During device startup these default values are copied from the OTP bank (SPI addresses 1000h to 1022h) to the main register bank (SPI addresses 0000h to 0401h). The OTP registers should only be programmed once during IC initialization, during normal operation only the main registers are accessed and modified. It is possible to block programming of the OTP section by setting the OSAENB bit in the ORCONF33 Register of the OTP. For detailed information on the content of the OTP, see the corresponding main register descriptions in the previous section.

ORCONF0 – ORCONF4 (assigned to OTP bank 0)

ADDR	Data Name	D[7]	D[6]	D[5]	D[4]	D[3]	D[2]	D[1]	D[0]
1000h	ORCONF0	FRMD	FRREN	SCEN	PWMF	REGSEL	VCEN	SPCFG	PWMINSEL
1001h	ORCONF1	FLSEL[2:0]			ZPSEL[2:0]			PDTC	PWMON
1002h	ORCONF2	FGSTBLMD	FGOF[1:0]		FDTI[4:0]				
1003h	ORCONF3	CLMASK[3:0]				OCMASK[3:0]			
1004h	ORCONF4	SROFFT[3:0]				CRMASK[3:0]			

OTP write is start when ORCONF4 is written.

Other register value are hold by temporary registers.

These temporary registers are common for all banks.

When ORCONF* register is read, OTP read data without internal DFF is directly output to SPI read data.

ORCONF5 – ORCONF9 (assigned to OTP bank 1)

ADDR	Data Name	D[7]	D[6]	D[5]	D[4]	D[3]	D[2]	D[1]	D[0]
1005h	ORCONF5	SYNCEN	PPDOSEL	FSCDT[1:0]		FSCDL[3:0]			
1006h	ORCONF6	SSCGEN	CPTM[3:0]				THTH[1:0]		TSTS
1007h	ORCONF7	WDTEN	WDTSEL[2]	WDT[5:0]					
1008h	ORCONF8	VCLVPEN	CPEN	THWEN	THPEN	FSPEN	OVPEN	OCPEN	DIAGSEL
1009h	ORCONF9	RCVTM[1:0]		WDTSEL[1:0]		CPLT	FSPLT	OCPLT	DLTO

OTP write is start when ORCONF9 is written.

ORCONF10 – ORCONF14 (assigned to OTP bank 2)

ADDR	Data Name	D[7]	D[6]	D[5]	D[4]	D[3]	D[2]	D[1]	D[0]
100Ah	ORCONF10	VDHOVPEN	OOPOEN	CLDOEN	FGERACCEN	RCSMPMD	RCSMPEN	OPDTM[1:0]	
100Bh	ORCONF11	INIODUTYMD	INITAGMD	CLREFEN_ROT	CLREFEN_STOP	ATSYNCOFF	Internal use	STSYNCEN	SPIINSEL
100Ch	ORCONF12	FGERDECEN	FGERDEC[2:0]			FGERACC[3:0]			
100Dh	ORCONF13	0	DWNSET	PDTSEL[1:0]		FSPDTM[1:0]		OVPMASK[1:0]	
100Eh	ORCONF14	LASET_LIM[4:3]		SSTT[5:0]					

OTP write is start when ORCONF14 is written.

ORCONF15 – ORCONF19 (assigned to OTP bank 3)

ADDR	Data Name	D[7]	D[6]	D[5]	D[4]	D[3]	D[2]	D[1]	D[0]
100Fh	ORCONF15	STOSC[7:0]							
1010h	ORCONF16	LASET_LIM[2:0]			LASET_L[4:0]				
1011h	ORCONF17	MSKRSTNUM0_SIX[3:0]				MSKRSTNUM1_SIX[3:0]			
1012h	ORCONF18	CLMSPD[0]	PX[2:0]			Internal use	PG[2:0]		
1013h	ORCONF19	IX[3:0]				SSCGCN[0]	IG[2:0]		

OTP write is start when ORCONF19 is written.

ORCONF20 – ORCONF24 (assigned to OTP bank 4)

ADDR	Data Name	D[7]	D[6]	D[5]	D[4]	D[3]	D[2]	D[1]	D[0]
1014h	ORCONF20	CLMSPD[1]	CLSEL	0	0	SSCGCN[1]	0	0	0
1015h	ORCONF21	OCSEL[0]	DDUTYSEL[2:0]			USTEPSEL[1:0]		DSTEPSEL[1:0]	
1016h	ORCONF22	DUTY_L[7:0]							
1017h	ORCONF23	DUTY_H[7:0]							
1018h	ORCONF24	TAG_L[7:0]							

OTP write is start when ORCONF24 is written. SSCGCN [1], [0] are separated by ADDR 1013h, 1014h.

ORCONF25 – ORCONF29 (assigned to OTP bank 5)

ADDR	Data Name	D[7]	D[6]	D[5]	D[4]	D[3]	D[2]	D[1]	D[0]
1019h	ORCONF25	OCSEL[1]	TAG_L[14:8]						
101Ah	ORCONF26	TAG_H[7:0]							

ORCONF25 – ORCONF29 (assigned to OTP bank 5)

ADDR	Data Name	D[7]	D[6]	D[5]	D[4]	D[3]	D[2]	D[1]	D[0]
101Bh	ORCONF27	SLMD	TAG_H[14:8]						
101Ch	ORCONF28	WINDSEL[1:0]		CLDWNOFF	LASET_H[4:0]				
101Dh	ORCONF29	MSKRSTNUM0_INI[3:0]				MSKRSTNUM1_INI[3:0]			

OTP write is start when ORCONF29 is written. OCSEL[1], [0] are separated by ADDR 1015h, 1019h.

ORCONF30 – ORCONF34 (assigned to OTP bank 6)

ADDR	Data Name	D[7]	D[6]	D[5]	D[4]	D[3]	D[2]	D[1]	D[0]
101Eh	ORCONF30	MSKRSTNUM0_THR[3:0]				MSKRSTNUM1_THR[3:0]			
101Fh	ORCONF31	MSKRSTNUM0_TWO[3:0]				MSKRSTNUM1_TWO[3:0]			
1020h	ORCONF32	MSKRSTNUM0_ONE[3:0]				MSKRSTNUM1_ONE[3:0]			
1021h	ORCONF33	ORCONF33[7:4]				RBSEL	RCSMEN	OSAENB	MSAENB
1022h	ORCONF34	RCSM[7:0]							

OTP write is start when ORCONF34 is written.

ORCONF33[7:4] has no register to download, but OTP output is used for checksum calculation.

OTP Data Download

The OTP register data is typically transferred into the main registers at device startup (From sleep to standby transition). This operation takes up to 340 μs. A high OBSY flag in the first returned byte during a SPI transaction indicates this.

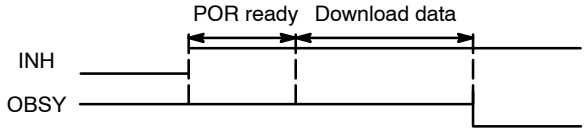

Figure 22. OTP Data Download Timing at Startup

An OTP download can also actively be initiated by writing 00h to register MRODL. This command requires monitoring the OBSY flag. Don't perform specific register access (MRCONF, MRSPCT, ORCONF) until the OBSY flag is cleared.

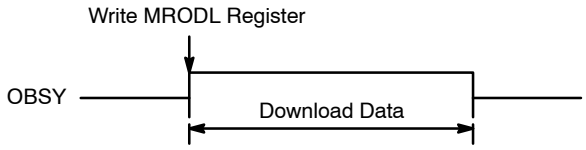

Figure 23. OTP Data Download Timing after an MRODL Commnad

OTP Programming Overall

Figure 24 shows overall of the OTP memory write and verify flow. It consists of preparation, write and three times of data integrity verification.

OTP Programming

The OTP registers can be programmed in Standby mode only while the write lock bit OSAENB is set 0. And, the supply voltage at pin VS must be more than 14 V. The actual write operation to the OTP memory will be done, when the state change from 0 to 1 is commanded. Once the bit state is changed to 1, it cannot be change back to 0. The number of writing is limited to one per bit.

The OTP memory consists of five memory banks. The bank contains five register bytes. The bank is filled by five SPI write transactions. When the last address register in each bank is received, the busy−flag OBSY will be set and those five bytes will be programmed permanently into the corresponding OTP bank. The OBSY flag will be reset at the end of the write cycle. OBSY is in GSDAT register. To get GSDAT, SPI accesses to the register MRACK is recommended. MRACK doesn't interfere with the programming operation. MRCONF, MRSPCT, ORCONF registers cannot be accessed during an OTP write cycle.

MRCONF, MRSPCT, ORCONF, ORSPCT, ORACS registers cannot be accessed during an OTP write cycle.

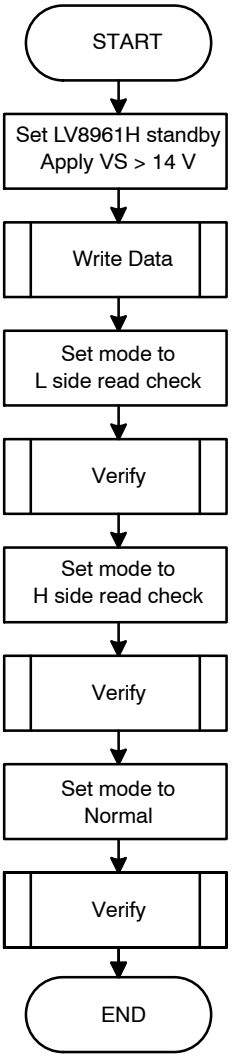

Figure 24. OTP Memory Write and Verify Flow

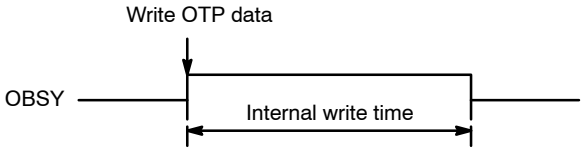

Figure 25. OTP Programming Timing

The programming takes 20 ms maximum. To simplify operation, a waiting for 20 ms plus margin can be applicable instead of a polling of the flag OBSY. (Figure 26)

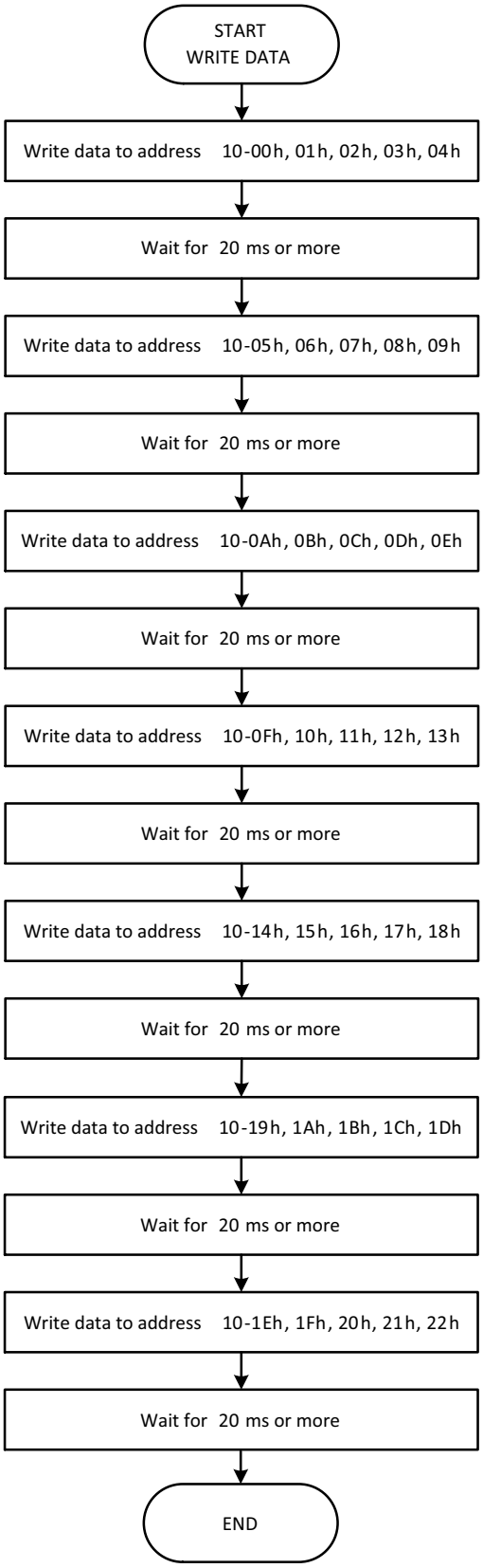

Figure 26. OTP Memory Write Operation

OTP Data Integrity Verification

In order to verify that the OTP programming operation was successful. It is strongly recommended to do an OTP margin check: To do this, the OTP registers are downloaded into the main register bank with minimum and maximum readout thresholds. This OTP download is forced by writing 00h to register MRODL. The readout threshold is set in register MRORB.

OTP Margin read check sequence after programmed:

1. Set OTP readout threshold “low” by setting ORBEN = 1 and ORBLV = 0 in register MRORB
2. Execute OTP download command by writing 00h to MRODL
3. Verify that the main register contents are consistent with the programmed OTP data
4. Set OTP readout threshold “high” by setting ORBEN = 1 and ORBLV = 1 in register MRORB
5. Execute OTP download command by writing 00h to MRODL
6. Verify that the main register contents are consistent with the programmed OTP data
7. Return OTP threshold to normal by setting ORBEN = 0 and ORBLV = 0
8. Execute OTP download command
9. Verify that the main register contents are consistent with the programmed OTP data

Locking OTP Register Contents

MSAENB bit and OSAENB bit of ORCONF33 register are used in order to prevent write−access of the main registers and the OTP registers respectively.

CAUTION: Inadvertent writing of these bits will permanently lock the corresponding register blocks from any further write access. Should only be set at end of development cycles.

ORCONF33

ADDR	Data Name	D[7]	D[6]	D[5]	D[4]	D[3]	D[2]	D[1]	D[0]
1021h	ORCONF33	0	0	0	0	RBSEL	RCSMEN	OSAENB	MSAENB

RBSEL: Reverse detection Brake SELection

RBSEL=0: Short brake is disabled when reverse rotation is detected.

RBSEL=1: Short brake is enabled when reverse rotation is detected.

If RBSEL is set, short brake (all low−side FET are ON) is done until the rotation stops after reverse rotation is detected.

RCSMEN: Register CheckSuM ENable

RCSMEN=0: Register checksum diagnostic function is disabled.

RCSMEN=1: Register checksum diagnostic function is enabled.

This register is used in order to permanently prevent write access to the OTP and/or the main registers. This register data is transferred into MRACS register.

OSAENB: Otp registers Spi Access ENable Bar (Disable)

- OSAENB = 0: Write access permitted
- OSAENB = 1: Write access denied

OSAENB controls write access to the OTP registers.

MSAENB: Main registers Spi Access ENable Bar (Disable)

- MSAENB = 0: Write access permitted
- MSAENB = 1: Write access denied

MSAENB controls write access to the main registers.

ORCONF34

ADDR	Data Name	D[7]	D[6]	D[5]	D[4]	D[3]	D[2]	D[1]	D[0]
1022h	ORCONF34	RCSM[7:0]							

RCSM: Register CheckSuM

The checksum of whole OTP memory data except this register ORCONF34 needs to be written when the data integrity diagnostic function is enabled. This checksum is a cyclic redundancy check (CRC) which is calculated by the following generator polynomial.

$$x^8 + x^6 + x^3 + x^2 + 1$$

The read out value of the register RCSMSD must be applied to the CRC calculation as a seed. An example CRC calculation program in C language is shown below.

```
// x^8 + x^6 + x^3 + x^2 + 1
#define MSB_CRC8     (0x4D)

unsigned char crc_table[256];
unsigned char crc_seed;

static unsigned char GetCRC8_2( unsigned char seed, const void *buff, size_t size )
{
    unsigned char *p = (unsigned char *)buff;
    unsigned char crc8;
    int i;

    for ( crc8 = seed ; size != 0 ; size-- ){
        crc8 ^= *p++;

        for ( i = 0 ; i < CHAR_BIT ; i++ ){
            if ( crc8 & 0x80 ){
                crc8 <<= 1; crc8 ^= MSB_CRC8;
            }
            else{
                crc8 <<= 1;
            }
        }
    }
    return crc8;
}
```

This program is used in the following procedure.

1. Set ORCONF0 through 33 to crc_table
2. Set CRC code read from the register RCSMSD to crc_seed
3. Call GetCRC8_2(crc_seed, crc_table, 34)
4. Use return value for ORCONF34

Register Checksum Feature

To activate the register checksum feature, the following register bits must be provided before OTP programming operation.

1. Determine the periodical checksum verify function to be enabled or not, which is specified by the bit RCSMPEN
2. Determine the operation at the checksum error detection: A motor is kept running or stopped, which is specified by the bit RCSMPMD
3. The bit RCSMEN must be set 1 to enable this feature
4. Read out the checksum code (CRC) of the OTP memory reserved area from the register RCSMSD[7:0] whose value may be different by part
5. Letting the RCSMSD be a seed for the CRC calculation, prepare the total checksum (CRC) from ORCON0 to ORCON33, which will be used for the register RCSM[7:0] at ORCONF34

The following table shows related register bits to this checksum feature.

Table 14.

Register Name	Data Name	Address	Description
RCSMPEN	ORCONF10	100Ah	Enable the periodical checksum verification while a motor is running
RCSMPMD	ORCONF10	100Ah	Selection of motor running or stop when the checksum error is detected
RCSMEN	ORCON33	1021h	Enable the register checksum function
RCSM	ORCONF34	1022h	Checksum to be written with OTP memory data together, which must be calculated by user, applying the code of RCSMSD as a seed of CRC
RCSMSD	MRCSMSD	0208h	Seed of the register checksum
RCSM	MRCONF14	010Eh	Calculated checksum which is automatically calculated on this device Code of this register will be compared with the preprogrammed checksum code in the register RCSM at ORCONF34 OTP memory.
RCSMPO	MRDIAG1	0202h	Checksum error flag
RCSMPEN	MRCONF10	010Ah	Enable the periodical checksum verification while a motor is running. This value will be copied from OTP memory at the device reset or the download operation.
RCSMPMD	MRCONF10	010Ah	Selection of motor running or stop when the checksum error is detected This value will be copied from OTP memory at the device reset or the download operation.

Table 15.

Symbol	Symbol Name Explanation
ATSYNCOFF	AuTomatic SYNChronous rectification OFF (active low)
BAREG	Base Address REGister (short format access)
BASEL	Base Address SELection
BEMFEN	BEMF detection ENabled
BRK	short BRaKe enable
CHPLVPO	CHarge Pump Low Voltage Protection Output
CHPOVPO	CHarge Pump OverVoltage Protection Output
CLDO	Current Limit Detection Output
CLDOEN	Current Limit Detection Output ENable
CLDWNOFF	Current Limit semi−powerDoWN OFF
CLMASK	Current Limit MASKing time
CLMSPD	Current LiMit Semi−PowerDown level
CLREFEN_ROT	Current Limit REFerence ENable (free ROTating status)
CLREFEN_STOP	Current Limit REFerence ENable (STOP status)
CLSEL	Current Limit threshold SELection
CPEN	Constrained movement Protection ENable
CPLT	Constrained movement Protection LaTch selection
CPO	Constrained movement Protection Output
CPTM	Constrained movement Protection TiMe
CRDTO	Current Reversed Detection Output
CRMASK	Current Reversed MASKing time
DDUTYSEL	Detection level of DUTY output changes SELection

Table 15. (continued)

Symbol	Symbol Name Explanation
DIAGS	DIAG Status
DIAGSEL	DIAG polarity SELection
DLTO	Diagnostics output Latched Transitions Only
DSTEPSEL	DownSpeed Transition stEP SELection
DUTY_H	input pwm DUTY cycle High limit
DUTY_L	input pwm DUTY cycle Low limit
DWNSET	slowDoWN SETting
FDTI	Fet Dead TIme
FGERACC	Frequeny Generator ERrordetection during ACCeleration setting
FGERACCEN	Frequeny Generator ERrordetection during ACCeleration ENable
FGERDEC	Frequeny Generator ERrordetection during DECeleration setting
FGERDECEN	Frequeny Generator ERrordetection during DECeleration ENable
FGERPO	Frequency Generator ERror Protection Output
FGOF	Frequency Generator Output Frequency (= rotation speed)
FGSTBLMD	Frequency Generator STaBLe MoDe
FLSEL	Full Load fallback level SELection (PWM input 100% duty mode)
FRMD	Forward/Reverse MoDe
FRREN	FRee Running ENable
FSCDL	Fet Short−Circuit Detection Level
FSCDT	Fet Short−Circuit Detection Time
FSPDTM	Fet Short Protection Debounce TiMe setting
FSPEN	Fet Short Protection ENable
FSPLT	Fet Short Protection LaTch selection
FSPO	Fet Short Protection Output
GSDAT	General Status DATa
HIZON	HIgh Z state ON (active)
IDUTY_IDUTY	Input DUTYcycle
IG	Integral Gain
INIODUTYMD	INItial Output DUTY cycle MoDe (soft start function)
INITAGMD	INItial max. TArGet output duty cycle MoDe
IX	Integral gain eXponent
LACTL_EPOS	Lead Angle ConTroL Energizing POSition
LANUM0	Lead Angle Number 0 (output monitor)
LANUM1	Lead Angle Number 1 (control input)
LASET_H	Lead Angle SETting at High output duty cycle (100%)
LASET_L	Lead Angle SETting at Low output duty cycle (0%)
LASET_LIM	Lead Angle SETting max. LIMit
LATCH	LATCHed shutdown status
MRACK	Main Register Access CheckK
MRACS	Main Register ACcess Setting
MRCONF	Main Register CONFiguration
MRDIAG	Main Register DIAGnostics

Table 15. (continued)

Symbol	Symbol Name Explanation
MRODL	Main Register Otp DownLoad
MRORB	Main Register Otp Read Bias check
MRRST	Main Register ReSeT
MRSPCT	Main Register SPeed ConTrol
MSAENB	Main registers Spi Access ENable Bar (Disable)
MSKRSTNUM0_INI	same for startup 6−window mode
MSKRSTNUM0_ONE	MaSK Rate SeTting for bemf observation NUMber 0, for 1−window mode
MSKRSTNUM0_SIX	same for 6−window mode
MSKRSTNUM0_THR	same for 3−window mode
MSKRSTNUM0_TWO	same for 2−window mode
MSKRSTNUM1_INI	same for startup 6−window mode
MSKRSTNUM1_ONE	MaSK Rate SeTting for bemf observation NUMber 1, for 1−window mode
MSKRSTNUM1_SIX	same for 6−window mode
MSKRSTNUM1_THR	same for 3−window mode
MSKRSTNUM1_TWO	same for 2−window mode
NO_OPEN	NO OPEN phases detected
OBSY	Otp BuSY
OCMASK	OverCurrent MASKing time
OCPEN	OverCurrent Protection ENable
OCPLT	OverCurrent Protection LaTch selection
OCPO	OverCurrent Protection Output
OCSEL	OverCurrent threshold SELection
ODL	Otp DownLoad and checksum
ODUTYMAX	Output DUTYcycle MAXimum
OOPO	Open cOnnector Protection Output
OOPOEN	Open cOnnector Protection Output ENable
OPDTM	OPen connector Detection TiMe selection
OPEN_U	OPEN U phase (active low)
OPEN_V	OPEN V phase (active low)
OPEN_W	OPEN W phase (active low)
OPENLX0	OPEN Loop condition for tag0 (active low)
ORBEN	Otp Read Bias check ENable
ORBLV	Otp Read Bias check LeVel
OSAENB	Otp registers Spi Access ENable Bar (Disable)
OTPAZ	OTP All bits Zero
OVPEN	OverVoltage Protection ENable
OVPMASK	OverVoltage Protection MASKing time
PDTC	Pending Detection of a Transition Control
PDTSEL	Pending Detection of a Transition SELection
PG	Proportional Gain
PIDOLT	PI calculated Duty cycle Output resuLT
PPDOSEL	Pwm Problem Diagnostics Output SELection

Table 15. (continued)

Symbol	Symbol Name Explanation
PROT_F	Period of ROTation (Frequency)
PROT_T	Period of ROTation (Time)
PWMDTIN	PWM DuTycycle INput register
PWMF	PWM input Frequency selection
PWMHCNT_LT	PWM input High CouNT (LaTched)
PWMINSEL	PWM INput pin SELection
PWMON	PWM ON polarity
PWMPCNT_LT	PWM input Period CouNT (LaTched)
PWMPO	PWM input abnormal Protection Output
PX	Proportional gain eXponent
RBSEL	Reverse detection Brake SELection
RCSM	Register CheckSuM
RCSMEN	Register CheckSuM ENable
RCSMPEN	Register CheckSuM Periodical at running motor ENable
RCSMPMD	Register CheckSuM error then Power Motor Down
RCSMPO	Register CheckSuM Protection Output
RCSMSD	Register CheckSuM SeeD
RCVTM	ReCoVery TiMe setting
RECALC	RECALCulate target speed from input pwm control table
REGAZ	otp REGister All bits Zero
REGCRC_RSLT	REGister CRC ReSuLT
REGSEL	Vcc REGulator SELection
SACF	Spi ACcess Failed
SCEN	external Speed Control ENable
SLMD	SinusoidaL Mode Driving
SMOD	Status MODe
SPCFG	Speed feedback loop calculation Period ConFiGuration
SPCO	SPeed Control error Output
SPIINSEL	duty cycle through SPI INput SELection
SROFFT	Synchronous Rectification OFF Time
SSCGCN	Spread Spectrum Charge pump Generation Clock Number
SSCGEN	Spread Spectrum Charge pump Generation ENable
SSTT	Soft STart Time
STATSEL	STATus data SELection
STATUS	internal STATUS output
STOSC	STartup OSCillator
STSYNCEN	sofSTart SYNChronous rectification ENable (active low)
STUPO	bemf−less STartUp Period Output
SYNCEN	SYNChronous rectification ENable (active low)
TAG_H	TArGet speed High
TAG_L	TArGet speed Low
TAG0	TArGet speed/output duty cycle 0 (output monitor)

Table 15. (continued)

Symbol	Symbol Name Explanation
TAG1	TArGet speed/output duty cycle 1 (control input)
THPEN	THermal Protection ENable
THPO	fet THermal Protection Output
THSPO	THermal Shutdown Protection Output
THTH	THreshold of THermometer
THWEN	THermal Warning ENable
THWPO	THermal Warning Protection Output
TSTS	Thermal Shutdown Temperature Setting
USTEPSEL	UpSpeed Transition stEP SELection
VCEN	VCc Regulator ENable
VCLVPEN	VCc Low Voltage Protection ENable
VCLVPO	VCc Low Voltage Protection Output
VDHOVPEN	VDH OverVoltage Protection ENable
VDHOVPO	VDH OverVoltage Protection Output
VGLLVPO	VGL Low Voltage Protection Output
VSLVPO	VS Low Voltage Protection Output
VSOVPO	VS OverVoltage Protection Output
WDT	WatchDog Timeout duration setting
WDTEN	WatchDog Timeout Enable
WDTP	WatchDog Timeout Protection mode selection
WDTPO	WatchDog Timer Protection Output
WDTSEL	WatchDog Target−duty SELection
WNDCHNG_EN	WiNDow mode CHaNGe ENabled
WINDSEL	bemf WINdow mode SELection
ZPSEL	Zero Power fallback level SELection (PWM input 0% duty mode)

MECHANICAL CASE OUTLINE
PACKAGE DIMENSIONS

ON Semiconductor®

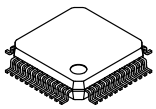

SPQFP48 7x7 / SQFP48K
CASE 131AN
ISSUE A

DATE 08 NOV 2013

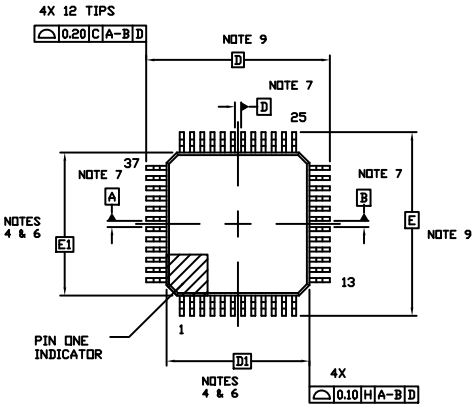

TOP VIEW

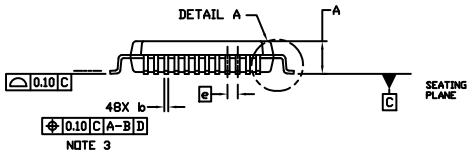

SIDE VIEW

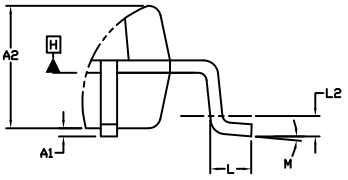

DETAIL A

NOTES:
1. DIMENSIONING AND TOLERANCING PER ASME Y14.5M, 1994.
2. CONTROLLING DIMENSION: MILLIMETERS
3. DIMENSION b DOES NOT INCLUDE DAMBAR PROTRUSION. DAMBAR PROTRUSION SHALL BE 0.08 MAX. AT MMC. DAMBAR CANNOT BE LOCATED ON THE LOWER RADIUS OF THE FOOT. MINIMUM SPACE BETWEEN PROTRUSION AND ADJACENT LEAD IS 0.07.
4. DIMENSIONS D1 AND E1 DO NOT INCLUDE MOLD FLASH, PROTRUSIONS, OR GATE BURRS. MOLD FLASH, PROTRUSIONS, OR GATE BURRS SHALL NOT EXCEED 0.25 PER SIDE. DIMENSIONS D1 AND E1 ARE MAXIMUM PLASTIC BODY SIZE INCLUDING MOLD MISMATCH.
5. THE TOP PACKAGE BODY SIZE MAY BE SMALLER THAN THE BOTTOM PACKAGE SIZE BY AS MUCH AS 0.15.
6. DATUMS A-B AND D ARE DETERMINED AT DATUM PLANE H.
7. A1 IS DEFINED AS THE VERTICAL DISTANCE FROM THE SEATING PLANE TO THE LOWEST POINT ON THE PACKAGE BODY.
8. DIMENSIONS D AND E TO BE DETERMINED AT DATUM PLANE C.

	MILLIMETERS	
DIM	MIN.	MAX.
A	---	1.70
A1	0.00	0.15
A2	1.50 REF	
b	0.15	0.26
D	9.00 BSC	
D1	7.00 BSC	
D2	4.60 REF	
E	9.00 BSC	
E1	7.00 BSC	
E2	4.60 REF	
e	0.50 BSC	
L	0.30	0.70
L2	0.25 BSC	
M	0°	10°

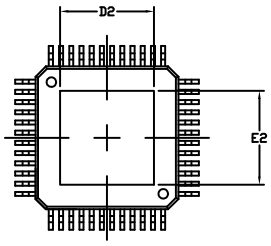

BOTTOM VIEW

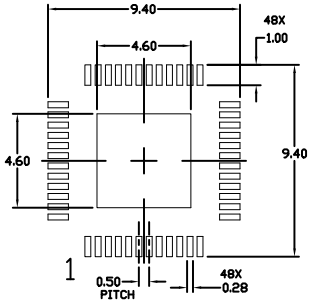

RECOMMENDED
MOUNTING FOOTPRINT

DOCUMENT NUMBER:	**98AON78439F**	Electronic versions are uncontrolled except when accessed directly from the Document Repository. Printed versions are uncontrolled except when stamped "CONTROLLED COPY" in red.	
DESCRIPTION:	**SPQFP48 7X7 / SQFP48K**		**PAGE 1 OF 1**

ON Semiconductor and ON are trademarks of Semiconductor Components Industries, LLC dba ON Semiconductor or its subsidiaries in the United States and/or other countries. ON Semiconductor reserves the right to make changes without further notice to any products herein. ON Semiconductor makes no warranty, representation or guarantee regarding the suitability of its products for any particular purpose, nor does ON Semiconductor assume any liability arising out of the application or use of any product or circuit, and specifically disclaims any and all liability, including without limitation special, consequential or incidental damages. ON Semiconductor does not convey any license under its patent rights nor the rights of others.

© Semiconductor Components Industries, LLC, 2019

onsemi, ONSEMI , and other names, marks, and brands are registered and/or common law trademarks of Semiconductor Components Industries, LLC dba "**onsemi**" or its affiliates and/or subsidiaries in the United States and/or other countries. **onsemi** owns the rights to a number of patents, trademarks, copyrights, trade secrets, and other intellectual property. A listing of **onsemi**'s product/patent coverage may be accessed at www.onsemi.com/site/pdf/Patent−Marking.pdf. **onsemi** reserves the right to make changes at any time to any products or information herein, without notice. The information herein is provided "as−is" and **onsemi** makes no warranty, representation or guarantee regarding the accuracy of the information, product features, availability, functionality, or suitability of its products for any particular purpose, nor does **onsemi** assume any liability arising out of the application or use of any product or circuit, and specifically disclaims any and all liability, including without limitation special, consequential or incidental damages. Buyer is responsible for its products and applications using **onsemi** products, including compliance with all laws, regulations and safety requirements or standards, regardless of any support or applications information provided by **onsemi**. "Typical" parameters which may be provided in **onsemi** data sheets and/or specifications can and do vary in different applications and actual performance may vary over time. All operating parameters, including "Typicals" must be validated for each customer application by customer's technical experts. **onsemi** does not convey any license under any of its intellectual property rights nor the rights of others. **onsemi** products are not designed, intended, or authorized for use as a critical component in life support systems or any FDA Class 3 medical devices or medical devices with a same or similar classification in a foreign jurisdiction or any devices intended for implantation in the human body. Should Buyer purchase or use **onsemi** products for any such unintended or unauthorized application, Buyer shall indemnify and hold **onsemi** and its officers, employees, subsidiaries, affiliates, and distributors harmless against all claims, costs, damages, and expenses, and reasonable attorney fees arising out of, directly or indirectly, any claim of personal injury or death associated with such unintended or unauthorized use, even if such claim alleges that **onsemi** was negligent regarding the design or manufacture of the part. **onsemi** is an Equal Opportunity/Affirmative Action Employer. This literature is subject to all applicable copyright laws and is not for resale in any manner.

PUBLICATION ORDERING INFORMATION

LITERATURE FULFILLMENT:
Email Requests to: orderlit@onsemi.com

onsemi Website: www.onsemi.com

TECHNICAL SUPPORT
North American Technical Support:
Voice Mail: 1 800−282−9855 Toll Free USA/Canada
Phone: 011 421 33 790 2910

Europe, Middle East and Africa Technical Support:
Phone: 00421 33 790 2910
For additional information, please contact your local Sales Representative

◊