Micropower Voltage Reference Diodes

LM285, LM385B

The LM285/LM385 series are micropower two−terminal bandgap voltage regulator diodes. Designed to operate over a wide current range of 10 μA to 20 mA, these devices feature exceptionally low dynamic impedance, low noise and stable operation over time and temperature. Tight voltage tolerances are achieved by on−chip trimming. The large dynamic operating range enables these devices to be used in applications with widely varying supplies with excellent regulation. Extremely low operating current make these devices ideal for micropower circuitry like portable instrumentation, regulators and other analog circuitry where extended battery life is required.

The LM285/LM385 series are packaged in a low cost TO−226 plastic case and are available in two voltage versions of 1.235 V and 2.500 V as denoted by the device suffix (see Ordering Information table). The LM285 is specified over a −40°C to +85°C temperature range while the LM385 is rated from 0°C to +70°C.

The LM385 is also available in a surface mount plastic package in voltages of 1.235 V and 2.500 V.

Features

- Operating Current from 10 μA to 20 mA
- 1.0%, 1.5%, 2.0% and 3.0% Initial Tolerance Grades
- Low Temperature Coefficient
- 1.0 Ω Dynamic Impedance
- Surface Mount Package Available
- These Devices are Pb−Free and are RoHS Compliant

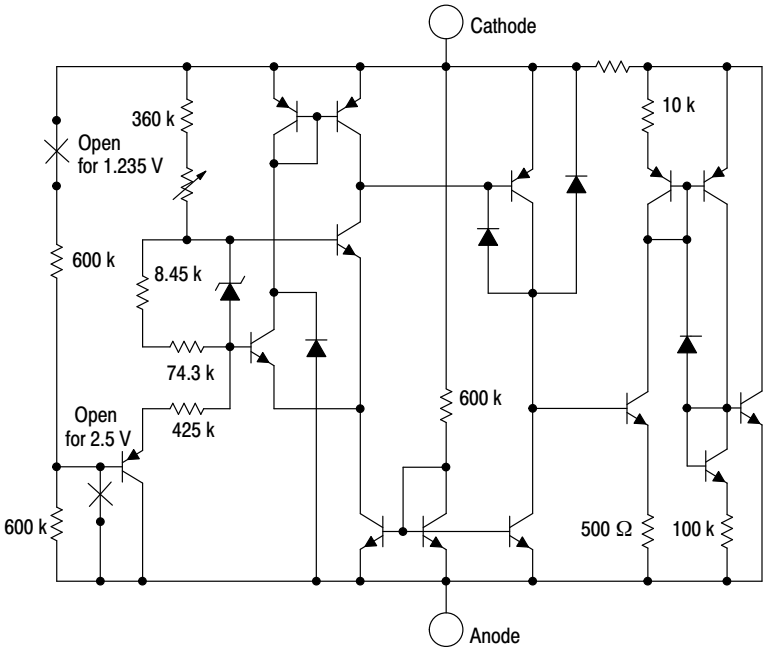

Figure 1. Representative Schematic Diagram

MARKING DIAGRAMS



SOIC−8
D SUFFIX
CASE 751

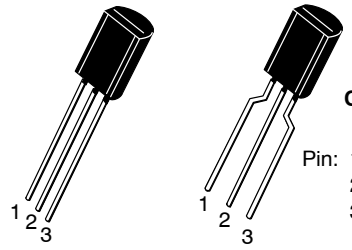

STRAIGHT LEAD BENT LEAD

TO−92
CASE 29−10

Pin: 1. N.C.
2. Cathode
3. Anode

xxx	= 1.2 or 2.5
y	= 2 or 3
z	= 1 or 2
A	= Assembly Location
L	= Wafer Lot
Y	= Year
W	= Work Week
▪	= Pb−Free Package

(Note: Microdot may be in either location)

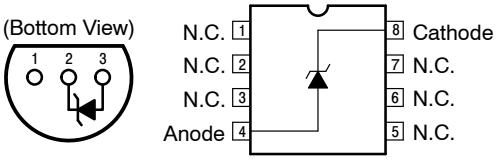

Standard Application

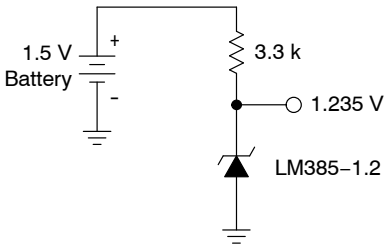

ORDERING INFORMATION

See detailed ordering and shipping information on page 6 of this data sheet.

© Semiconductor Components Industries, LLC, 2016

MAXIMUM RATINGS (T_A = 25°C, unless otherwise noted)

Rating	Symbol	Value	Unit
Reverse Current	I_R	30	mA
Forward Current	I_F	10	mA
Operating Ambient Temperature Range LM285 LM385	T_A	 −40 to +85 0 to +70	°C
Operating Junction Temperature	T_J	+150	°C
Storage Temperature Range	T_{stg}	−65 to + 150	°C
Electrostatic Discharge Sensitivity (ESD) Human Body Model (HBM) Machine Model (MM) Charged Device Model (CDM)	ESD	 4000 400 2000	V

Stresses exceeding those listed in the Maximum Ratings table may damage the device. If any of these limits are exceeded, device functionality should not be assumed, damage may occur and reliability may be affected.

ELECTRICAL CHARACTERISTICS (T_A = 25°C, unless otherwise noted)

Characteristic	Symbol	LM285−1.2			LM385−1.2/LM385B−1.2			Unit
		Min	Typ	Max	Min	Typ	Max	
Reverse Breakdown Voltage ($I_{Rmin} \le I_R \le$ 20 mA) LM285−1.2/LM385B−1.2 $T_A = T_{low}$ to T_{high} (Note 1) LM385−1.2 $T_A = T_{low}$ to T_{high} (Note 1)	$V_{(BR)R}$	 1.223 1.200 − −	 1.235 − − −	 1.247 1.270 − −	 1.223 1.210 1.205 1.192	 1.235 − 1.235 −	 1.247 1.260 1.260 1.273	V
Minimum Operating Current T_A = 25°C $T_A = T_{low}$ to T_{high} (Note 1)	I_{Rmin}	 − −	 8.0 −	 10 20	 −	 8.0 −	 15 20	μA
Reverse Breakdown Voltage Change with Current $I_{Rmin} \le I_R \le$ 1.0 mA, T_A = +25°C $T_A = T_{low}$ to T_{high} (Note 1) 1.0 mA $\le I_R \le$ 20 mA, T_A = +25°C $T_A = T_{low}$ to T_{high} (Note 1)	$\Delta V_{(BR)R}$	 − − − −	 − − − −	 1.0 1.5 10 20	 − − − −	 − − − −	 1.0 1.5 20 25	mV
Reverse Dynamic Impedance I_R = 100 μA, T_A = +25°C	Z	 −	 0.6	 −	 −	 0.6	 −	Ω
Average Temperature Coefficient 10 μA $\le I_R \le$ 20 mA, $T_A = T_{low}$ to T_{high} (Note 1)	$\Delta V_{(BR)}/\Delta T$	 −	 80	 −	 −	 80	 −	ppm/°C
Wideband Noise (RMS) I_R = 100 μA, 10 Hz $\le$ f $\le$ 10 kHz	n	 −	 60	 −	 −	 60	 −	μV
Long Term Stability I_R = 100 μA, T_A = +25°C ± 0.1°C	S	 −	 20	 −	 −	 20	 −	ppm/kHR
Reverse Breakdown Voltage ($I_{Rmin} \le I_R \le$ 20 mA) LM285−2.5/LM385B−2.5 $T_A = T_{low}$ to T_{high} (Note 1) LM385−2.5 $T_A = T_{low}$ to T_{high} (Note 1)	$V_{(BR)R}$	 2.462 2.415 − −	 2.5 − − −	 2.538 2.585 − −	 2.462 2.436 2.425 2.400	 2.5 − 2.5 −	 2.538 2.564 2.575 2.600	V
Minimum Operating Current T_A = 25°C $T_A = T_{low}$ to T_{high} (Note 1)	I_{Rmin}	 − −	 13 −	 20 30	 − −	 13 −	 20 30	μA

1. T_{low} = −40°C for LM285−1.2, LM285−2.5
   T_{high} = +85°C for LM285−1.2, LM285−2.5
   T_{low} = 0°C for LM385−1.2, LM385B−1.2, LM385−2.5, LM385B−2.5
   T_{high} = +70°C for LM385−1.2, LM385B−1.2, LM385−2.5, LM385B−2.5

ELECTRICAL CHARACTERISTICS (T_A = 25°C, unless otherwise noted)

Characteristic	Symbol	LM285−1.2			LM385−1.2/LM385B−1.2			Unit
		Min	Typ	Max	Min	Typ	Max	
Reverse Breakdown Voltage Change with Current	$\Delta V_{(BR)R}$							mV
$I_{Rmin} \le I_R \le 1.0$ mA, T_A = +25°C		–	–	1.0	–	–	2.0	
$T_A = T_{low}$ to T_{high} (Note 2)		–	–	1.5	–	–	2.5	
1.0 mA $\le I_R \le$ 20 mA, T_A = +25°C		–	–	10	–	–	20	
$T_A = T_{low}$ to T_{high} (Note 2)		–	–	20	–	–	25	
Reverse Dynamic Impedance I_R = 100 μA, T_A = +25°C	Z	–	0.6	–	–	0.6	–	Ω
Average Temperature Coefficient 20 μA $\le I_R \le$ 20 mA, $T_A = T_{low}$ to T_{high} (Note 2)	$\Delta V_{(BR)}/\Delta T$	–	80	–	–	80	–	ppm/°C
Wideband Noise (RMS) I_R = 100 μA, 10 Hz $\le f \le$ 10 kHz	n	–	120	–	–	120	–	μV
Long Term Stability I_R = 100 μA, T_A = +25°C ± 0.1°C	S	–	20	–	–	20	–	ppm/kHR

2. T_{low} = −40°C for LM285−1.2, LM285−2.5
   T_{high} = +85°C for LM285−1.2, LM285−2.5
   T_{low} = 0°C for LM385−1.2, LM385B−1.2, LM385−2.5, LM385B−2.5
   T_{high} = +70°C for LM385−1.2, LM385B−1.2, LM385−2.5, LM385B−2.5

TYPICAL PERFORMANCE CURVES FOR LM285−1.2/385−1.2/385B−1.2

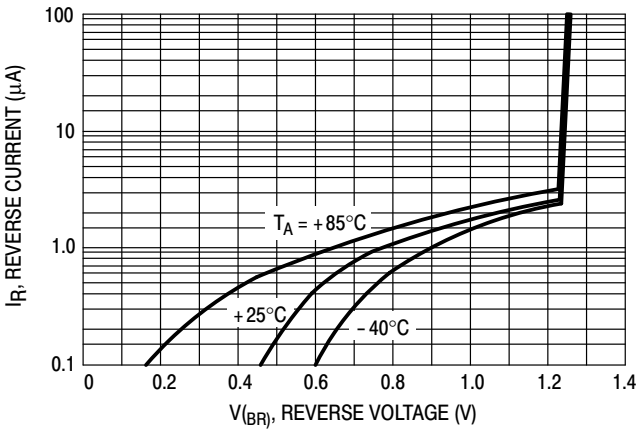

Figure 2. Reverse Characteristics

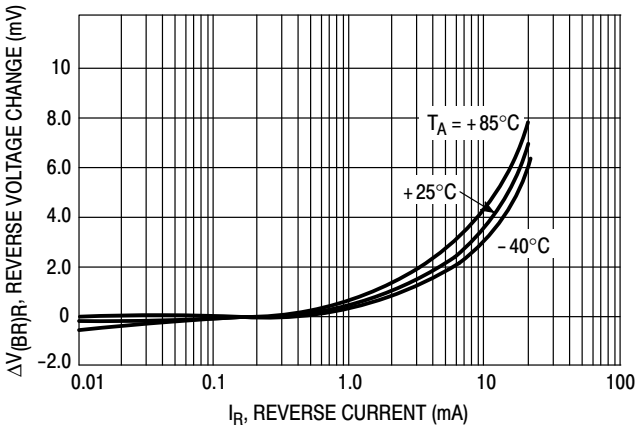

Figure 3. Reverse Characteristics

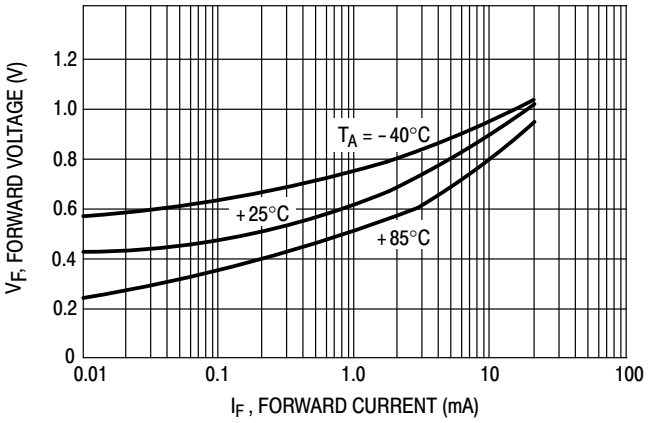

Figure 4. Forward Characteristics

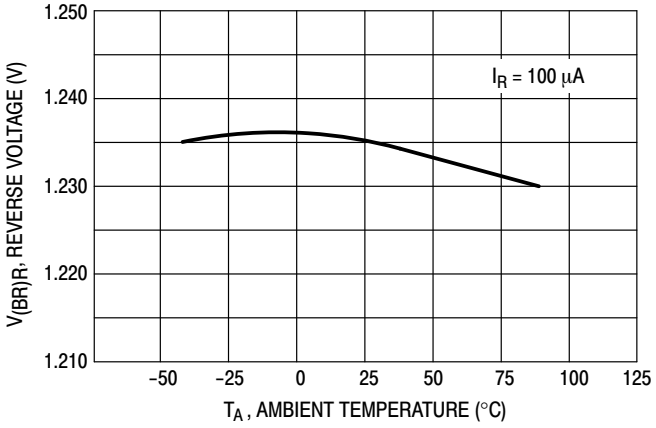

Figure 5. Temperature Drift

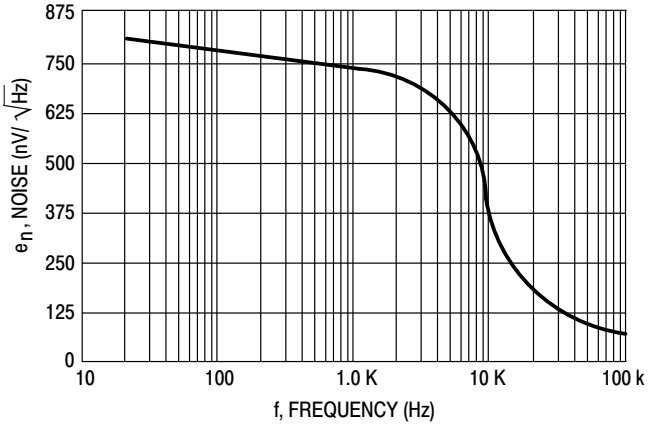

Figure 6. Noise Voltage

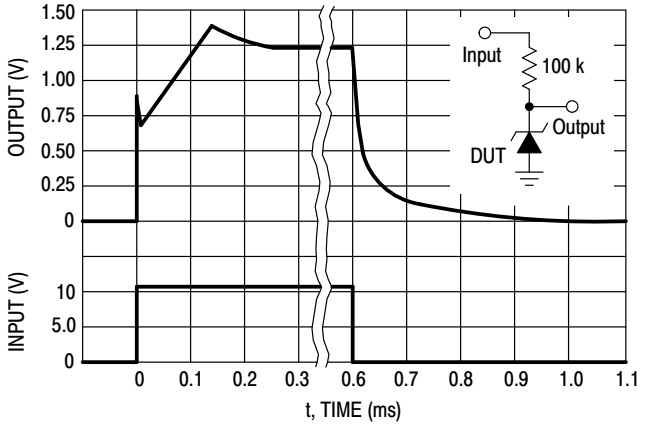

Figure 7. Response Time

TYPICAL PERFORMANCE CURVES FOR LM285−2.5/385−2.5/385B−2.5

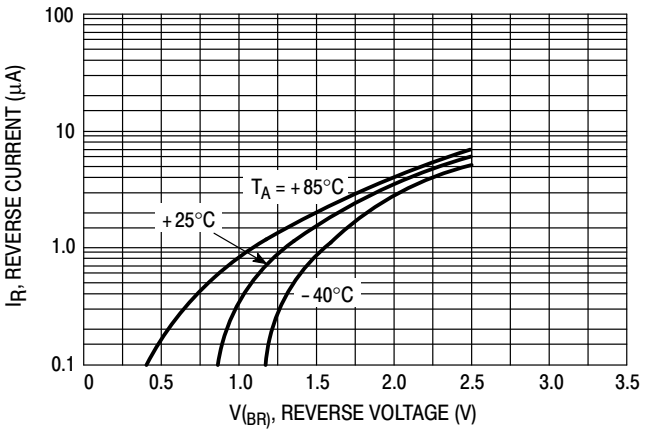

Figure 8. Reverse Characteristics

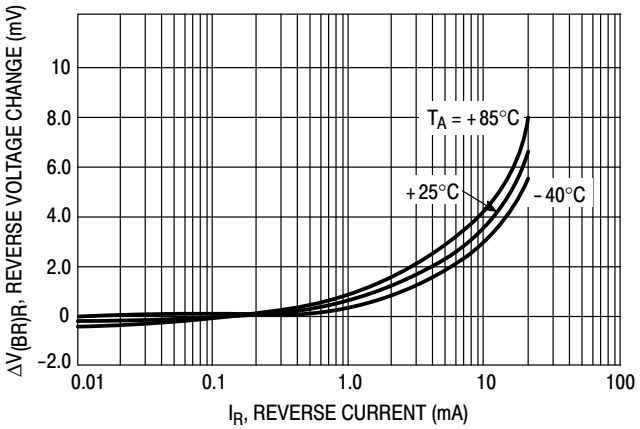

Figure 9. Reverse Characteristics

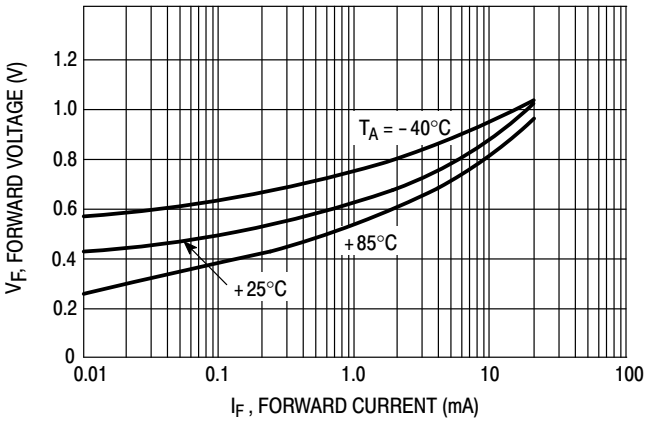

Figure 10. Forward Characteristics

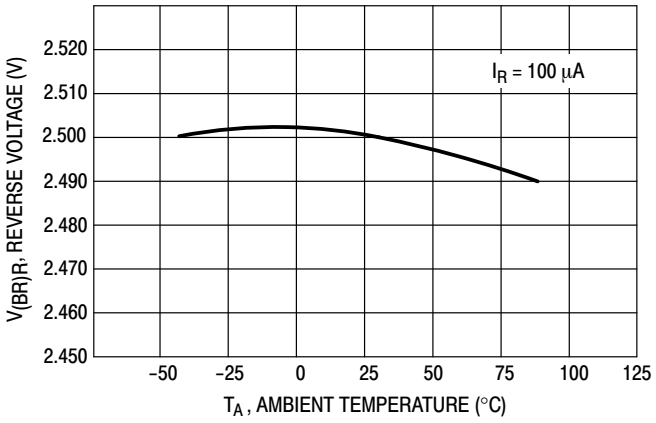

Figure 11. Temperature Drift

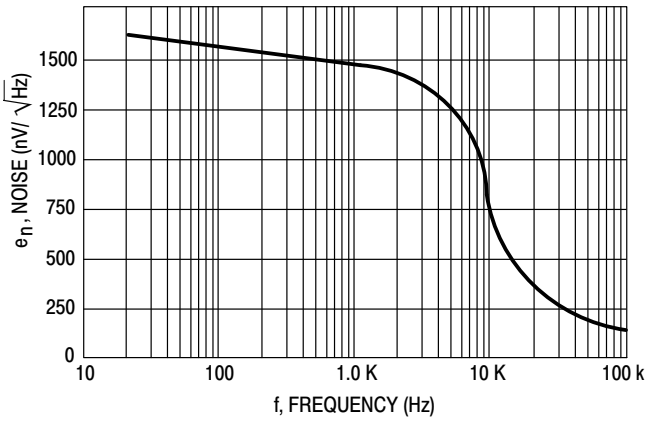

Figure 12. Noise Voltage

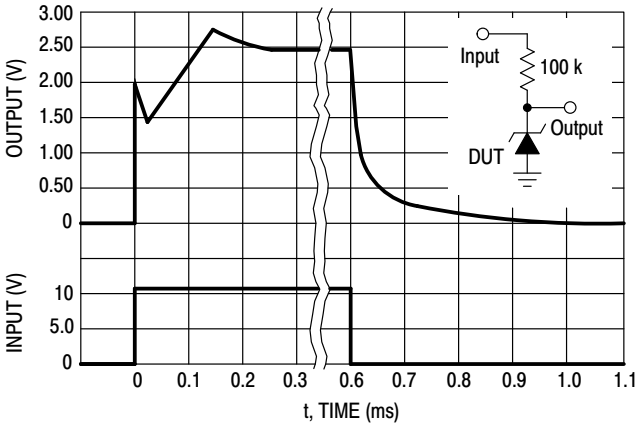

Figure 13. Response Time

ORDERING INFORMATION

Device	Operating Temperature Range	Reverse Break−Down Voltage	Package	Shipping†
LM285D−1.2	T_A = −40°C to +85°C	1.235 V	SOIC−8	98 Units / Rail
LM285D−1.2G			SOIC−8 (Pb−Free)	98 Units / Rail
LM285D−1.2R2			SOIC−8	2500 / Tape & Reel
LM285D−1.2R2G			SOIC−8 (Pb−Free)	2500 / Tape & Reel
LM285D−2.5		2.500 V	SOIC−8	98 Units / Rail
LM285D−2.5G			SOIC−8 (Pb−Free)	98 Units / Rail
LM285D−2.5R2			SOIC−8	2500 / Tape & Reel
LM285D−2.5R2G			SOIC−8 (Pb−Free)	2500 / Tape & Reel
LM285Z−1.2		1.235 V	TO−92	2000 Units / Bag
LM285Z−1.2G			TO−92 (Pb−Free)	2000 Units / Bag
LM285Z−2.5		2.500 V	TO−92	2000 Units / Bag
LM285Z−2.5G			TO−92 (Pb−Free)	2000 Units / Bag
LM285Z−1.2RA		1.235 V	TO−92	2000 / Tape & Reel
LM285Z−1.2RAG			TO−92 (Pb−Free)	2000 / Tape & Reel
LM285Z−2.5RA		2.500 V	TO−92	2000 / Tape & Reel
LM285Z−2.5RAG			TO−92 (Pb−Free)	2000 / Tape & Reel
LM285Z−2.5RP			TO−92	2000 Units / Fan−Fold
LM285Z−2.5RPG			TO−92 (Pb−Free)	2000 Units / Fan−Fold
LM385BD−1.2	T_A = 0°C to +70°C	1.235 V	SOIC−8	98 Units / Rail
LM385BD−1.2G			SOIC−8 (Pb−Free)	98 Units / Rail
LM385BD−1.2R2			SOIC−8	2500 / Tape & Reel
LM385BD−1.2R2G			SOIC−8 (Pb−Free)	2500 / Tape & Reel
LM385BD−2.5		2.500 V	SOIC−8	98 Units / Rail
LM385BD−2.5G			SOIC−8 (Pb−Free)	98 Units / Rail
LM385BD−2.5R2			SOIC−8	2500 / Tape & Reel
LM385BD−2.5R2G			SOIC−8 (Pb−Free)	2500 / Tape & Reel
LM385BZ−1.2		1.235 V	TO−92	2000 Units / Bag
LM385BZ−1.2G			TO−92 (Pb−Free)	2000 Units / Bag
LM385BZ−1.2RA			TO−92	2000 / Tape & Reel
LM385BZ−1.2RAG			TO−92 (Pb−Free)	2000 / Tape & Reel

†For information on tape and reel specifications, including part orientation and tape sizes, please refer to our Tape and Reel Packaging Specifications Brochure, BRD8011/D.

ORDERING INFORMATION

Device	Operating Temperature Range	Reverse Break−Down Voltage	Package	Shipping†
LM385BZ−2.5	T_A = 0°C to +70°C	2.500 V	TO−92	2000 Units / Bag
LM385BZ−2.5G			TO−92 (Pb−Free)	2000 Units / Bag
LM385BZ−2.5RA			TO−92	2000 / Tape & Reel
LM385BZ−2.5RAG			TO−92 (Pb−Free)	2000 / Tape & Reel
LM385D−1.2		1.235 V	SOIC−8	98 Units / Rail
LM385D−1.2G			SOIC−8 (Pb−Free)	98 Units / Rail
LM385D−1.2R2			SOIC−8	2500 / Tape & Reel
LM385D−1.2R2G			SOIC−8 (Pb−Free)	2500 / Tape & Reel
LM385D−2.5		2.500 V	SOIC−8	98 Units / Rail
LM385D−2.5G			SOIC−8 (Pb−Free)	98 Units / Rail
LM385D−2.5R2			SOIC−8	2500 / Tape & Reel
LM385D−2.5R2G			SOIC−8 (Pb−Free)	2500 / Tape & Reel
LM385Z−1.2		1.235 V	TO−92	2000 Units / Bag
LM385Z−1.2G			TO−92 (Pb−Free)	2000 Units / Bag
LM385Z−1.2RA			TO−92	2000 / Tape & Reel
LM385Z−1.2RAG			TO−92 (Pb−Free)	2000 / Tape & Reel
LM385Z−1.2RP			TO−92	2000 / Ammo Box
LM385Z−1.2RPG			TO−92 (Pb−Free)	2000 / Ammo Box
LM385Z−2.5		2.500 V	TO−92	2000 Units / Bag
LM385Z−2.5G			TO−92 (Pb−Free)	2000 Units / Bag
LM385Z−2.5RP			TO−92	2000 / Ammo Box
LM385Z−2.5RPG			TO−92 (Pb−Free)	2000 / Ammo Box

†For information on tape and reel specifications, including part orientation and tape sizes, please refer to our Tape and Reel Packaging Specifications Brochure, BRD8011/D.

TO−92 (TO−226) 1 WATT
CASE 29−10
ISSUE D

DATE 05 MAR 2021

SCALE 1:1

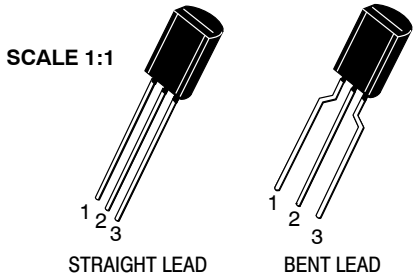

STRAIGHT LEAD

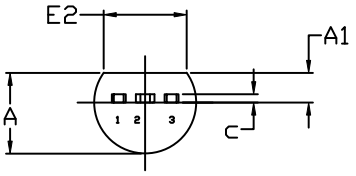

END VIEW

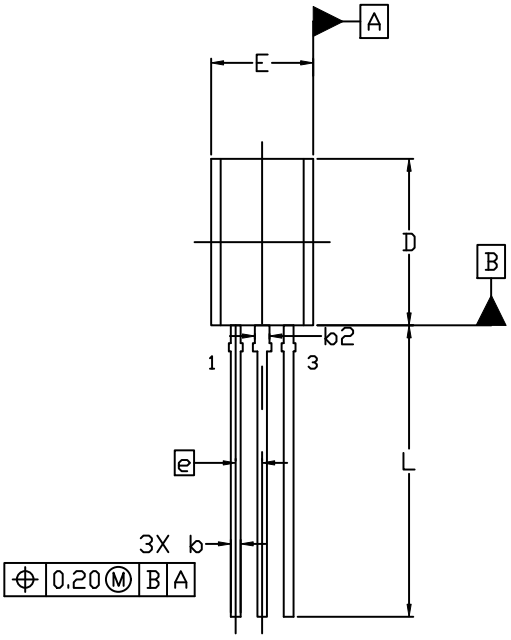

TOP VIEW

NOTES:
1. DIMENSIONING AND TOLERANCING PER ASME Y14.5M, 2009.
2. CONTROLLING DIMENSION: MILLIMETERS
3. DIMENSIONS D AND E DO NOT INCLUDE MOLD FLASH OR GATE PROTRUSIONS.
4. DIMENSION b AND b2 DOES NOT INCLUDE DAMBAR PROTRUSION. LEAD WIDTH INCLUDING PROTRUSION SHALL NOT EXCEED 0.20. DIMENSION b2 LOCATED ABOVE THE DAMBAR PORTION OF MIDDLE LEAD.

	MILLIMETERS		
DIM	MIN.	NOM.	MAX.
A	3.75	3.90	4.05
A1	1.28	1.43	1.58
b	0.38	0.465	0.55
b2	0.62	0.70	0.78
c	0.35	0.40	0.45
D	7.85	8.00	8.15
E	4.75	4.90	5.05
E2	3.90	---	---
e	1.27 BSC		
L	13.80	14.00	14.20

STYLES AND MARKING ON PAGE 3

ON Semiconductor and ON are trademarks of Semiconductor Components Industries, LLC dba ON Semiconductor or its subsidiaries in the United States and/or other countries. ON Semiconductor reserves the right to make changes without further notice to any products herein. ON Semiconductor makes no warranty, representation or guarantee regarding the suitability of its products for any particular purpose, nor does ON Semiconductor assume any liability arising out of the application or use of any product or circuit, and specifically disclaims any and all liability, including without limitation special, consequential or incidental damages. ON Semiconductor does not convey any license under its patent rights nor the rights of others.

© Semiconductor Components Industries, LLC, 2019

TO−92 (TO−226) 1 WATT
CASE 29−10
ISSUE D

DATE 05 MAR 2021

FORMED LEAD

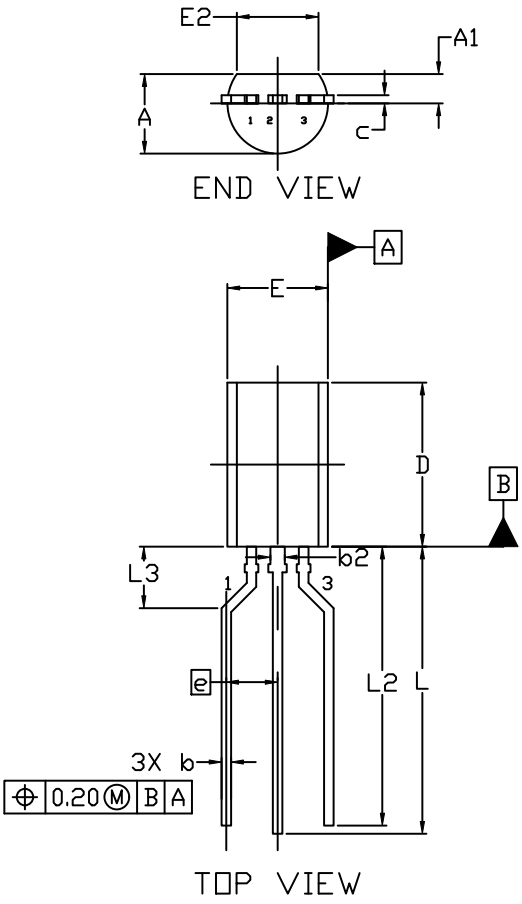

NOTES:
1. DIMENSIONING AND TOLERANCING PER ASME Y14.5M, 2009.
2. CONTROLLING DIMENSION: MILLIMETERS
3. DIMENSIONS D AND E DO NOT INCLUDE MOLD FLASH OR GATE PROTRUSIONS.
4. DIMENSION b AND b2 DOES NOT INCLUDE DAMBAR PROTRUSION. LEAD WIDTH INCLUDING PROTRUSION SHALL NOT EXCEED 0.20. DIMENSION b2 LOCATED ABOVE THE DAMBAR PORTION OF MIDDLE LEAD.

	MILLIMETERS		
DIM	MIN.	NOM.	MAX.
A	3.75	3.90	4.05
A1	1.28	1.43	1.58
b	0.38	0.465	0.55
b2	0.62	0.70	0.78
c	0.35	0.40	0.45
D	7.85	8.00	8.15
E	4.75	4.90	5.05
E2	3.90	---	---
e	2.50 BSC		
L	13.80	14.00	14.20
L2	13.20	13.60	14.00
L3	3.00 REF		

STYLES AND MARKING ON PAGE 3

ON Semiconductor and ON are trademarks of Semiconductor Components Industries, LLC dba ON Semiconductor or its subsidiaries in the United States and/or other countries. ON Semiconductor reserves the right to make changes without further notice to any products herein. ON Semiconductor makes no warranty, representation or guarantee regarding the suitability of its products for any particular purpose, nor does ON Semiconductor assume any liability arising out of the application or use of any product or circuit, and specifically disclaims any and all liability, including without limitation special, consequential or incidental damages. ON Semiconductor does not convey any license under its patent rights nor the rights of others.

© Semiconductor Components Industries, LLC, 2019

TO−92 (TO−226) 1 WATT
CASE 29−10
ISSUE D

DATE 05 MAR 2021

STYLE 1:
PIN 1. EMITTER
2. BASE
3. COLLECTOR

STYLE 2:
PIN 1. BASE
2. EMITTER
3. COLLECTOR

STYLE 3:
PIN 1. ANODE
2. ANODE
3. CATHODE

STYLE 4:
PIN 1. CATHODE
2. CATHODE
3. ANODE

STYLE 5:
PIN 1. DRAIN
2. SOURCE
3. GATE

STYLE 6:
PIN 1. GATE
2. SOURCE & SUBSTRATE
3. DRAIN

STYLE 7:
PIN 1. SOURCE
2. DRAIN
3. GATE

STYLE 8:
PIN 1. DRAIN
2. GATE
3. SOURCE & SUBSTRATE

STYLE 9:
PIN 1. BASE 1
2. EMITTER
3. BASE 2

STYLE 10:
PIN 1. CATHODE
2. GATE
3. ANODE

STYLE 11:
PIN 1. ANODE
2. CATHODE & ANODE
3. CATHODE

STYLE 12:
PIN 1. MAIN TERMINAL 1
2. GATE
3. MAIN TERMINAL 2

STYLE 13:
PIN 1. ANODE 1
2. GATE
3. CATHODE 2

STYLE 14:
PIN 1. EMITTER
2. COLLECTOR
3. BASE

STYLE 15:
PIN 1. ANODE 1
2. CATHODE
3. ANODE 2

STYLE 16:
PIN 1. ANODE
2. GATE
3. CATHODE

STYLE 17:
PIN 1. COLLECTOR
2. BASE
3. EMITTER

STYLE 18:
PIN 1. ANODE
2. CATHODE
3. NOT CONNECTED

STYLE 19:
PIN 1. GATE
2. ANODE
3. CATHODE

STYLE 20:
PIN 1. NOT CONNECTED
2. CATHODE
3. ANODE

STYLE 21:
PIN 1. COLLECTOR
2. EMITTER
3. BASE

STYLE 22:
PIN 1. SOURCE
2. GATE
3. DRAIN

STYLE 23:
PIN 1. GATE
2. SOURCE
3. DRAIN

STYLE 24:
PIN 1. EMITTER
2. COLLECTOR/ANODE
3. CATHODE

STYLE 25:
PIN 1. MT 1
2. GATE
3. MT 2

STYLE 26:
PIN 1. V_{CC}
2. GROUND 2
3. OUTPUT

STYLE 27:
PIN 1. MT
2. SUBSTRATE
3. MT

STYLE 28:
PIN 1. CATHODE
2. ANODE
3. GATE

STYLE 29:
PIN 1. NOT CONNECTED
2. ANODE
3. CATHODE

STYLE 30:
PIN 1. DRAIN
2. GATE
3. SOURCE

STYLE 31:
PIN 1. GATE
2. DRAIN
3. SOURCE

STYLE 32:
PIN 1. BASE
2. COLLECTOR
3. EMITTER

STYLE 33:
PIN 1. RETURN
2. INPUT
3. OUTPUT

STYLE 34:
PIN 1. INPUT
2. GROUND
3. LOGIC

STYLE 35:
PIN 1. GATE
2. COLLECTOR
3. EMITTER

GENERIC MARKING DIAGRAM*



XXXX = Specific Device Code
A = Assembly Location
L = Wafer Lot
Y = Year
W = Work Week
▪ = Pb−Free Package

(Note: Microdot may be in either location)

*This information is generic. Please refer to device data sheet for actual part marking. Pb−Free indicator, “G” or microdot “▪”, may or may not be present. Some products may not follow the Generic Marking.

DOCUMENT NUMBER:	98AON52857E	Electronic versions are uncontrolled except when accessed directly from the Document Repository. Printed versions are uncontrolled except when stamped “CONTROLLED COPY” in red.
DESCRIPTION:	TO−92 (TO−226) 1 WATT	PAGE 3 OF 3

ON Semiconductor and ON are trademarks of Semiconductor Components Industries, LLC dba ON Semiconductor or its subsidiaries in the United States and/or other countries. ON Semiconductor reserves the right to make changes without further notice to any products herein. ON Semiconductor makes no warranty, representation or guarantee regarding the suitability of its products for any particular purpose, nor does ON Semiconductor assume any liability arising out of the application or use of any product or circuit, and specifically disclaims any and all liability, including without limitation special, consequential or incidental damages. ON Semiconductor does not convey any license under its patent rights nor the rights of others.

© Semiconductor Components Industries, LLC, 2019

MECHANICAL CASE OUTLINE
PACKAGE DIMENSIONS



SCALE 1:1

SOIC−8 NB
CASE 751−07
ISSUE AK

DATE 16 FEB 2011

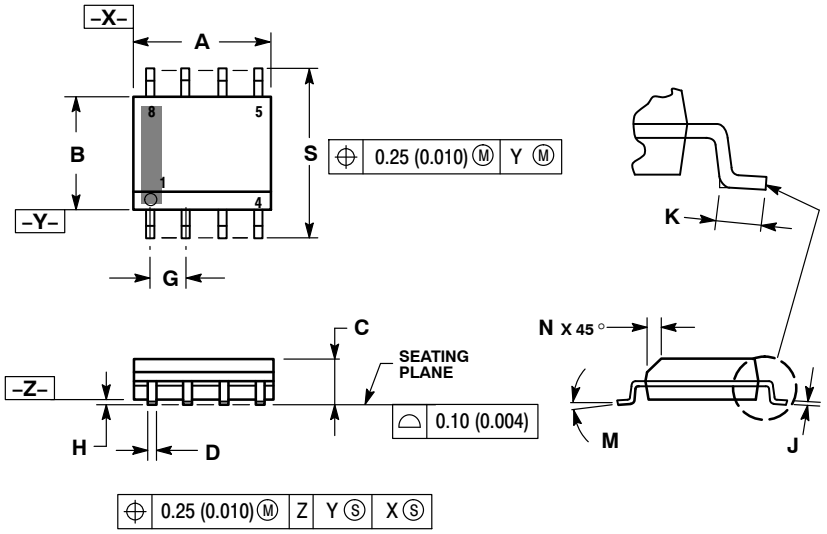

NOTES:
1. DIMENSIONING AND TOLERANCING PER ANSI Y14.5M, 1982.
2. CONTROLLING DIMENSION: MILLIMETER.
3. DIMENSION A AND B DO NOT INCLUDE MOLD PROTRUSION.
4. MAXIMUM MOLD PROTRUSION 0.15 (0.006) PER SIDE.
5. DIMENSION D DOES NOT INCLUDE DAMBAR PROTRUSION. ALLOWABLE DAMBAR PROTRUSION SHALL BE 0.127 (0.005) TOTAL IN EXCESS OF THE D DIMENSION AT MAXIMUM MATERIAL CONDITION.
6. 751−01 THRU 751−06 ARE OBSOLETE. NEW STANDARD IS 751−07.

	MILLIMETERS		INCHES	
DIM	MIN	MAX	MIN	MAX
A	4.80	5.00	0.189	0.197
B	3.80	4.00	0.150	0.157
C	1.35	1.75	0.053	0.069
D	0.33	0.51	0.013	0.020
G	1.27 BSC		0.050 BSC	
H	0.10	0.25	0.004	0.010
J	0.19	0.25	0.007	0.010
K	0.40	1.27	0.016	0.050
M	0 °	8 °	0 °	8 °
N	0.25	0.50	0.010	0.020
S	5.80	6.20	0.228	0.244

SOLDERING FOOTPRINT*

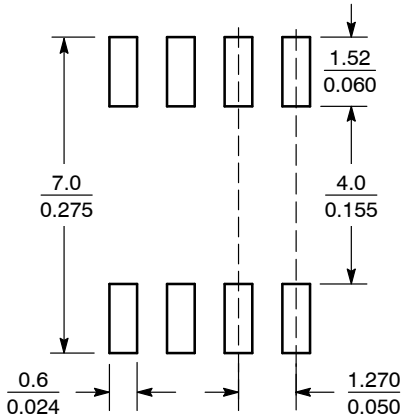

SCALE 6:1 (mm / inches)

*For additional information on our Pb−Free strategy and soldering details, please download the ON Semiconductor Soldering and Mounting Techniques Reference Manual, SOLDERRM/D.

GENERIC MARKING DIAGRAM*

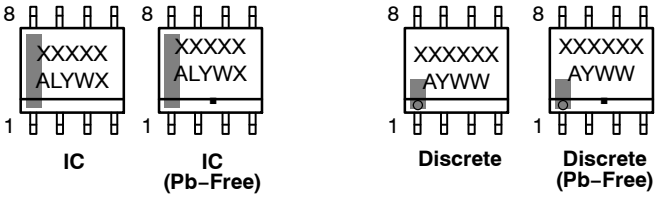

IC | IC (Pb−Free) | Discrete | Discrete (Pb−Free)

XXXXX = Specific Device Code
A = Assembly Location
L = Wafer Lot
Y = Year
W = Work Week
▪ = Pb−Free Package

XXXXXX = Specific Device Code
A = Assembly Location
Y = Year
WW = Work Week
▪ = Pb−Free Package

*This information is generic. Please refer to device data sheet for actual part marking. Pb−Free indicator, "G" or microdot "▪", may or may not be present. Some products may not follow the Generic Marking.

STYLES ON PAGE 2

DOCUMENT NUMBER:	**98ASB42564B**	Electronic versions are uncontrolled except when accessed directly from the Document Repository. Printed versions are uncontrolled except when stamped "CONTROLLED COPY" in red.
DESCRIPTION:	**SOIC−8 NB**	**PAGE 1 OF 2**

onsemi and onsemi are trademarks of Semiconductor Components Industries, LLC dba **onsemi** or its subsidiaries in the United States and/or other countries. **onsemi** reserves the right to make changes without further notice to any products herein. **onsemi** makes no warranty, representation or guarantee regarding the suitability of its products for any particular purpose, nor does **onsemi** assume any liability arising out of the application or use of any product or circuit, and specifically disclaims any and all liability, including without limitation special, consequential or incidental damages. **onsemi** does not convey any license under its patent rights nor the rights of others.

© Semiconductor Components Industries, LLC, 2019

SOIC−8 NB
CASE 751−07
ISSUE AK

DATE 16 FEB 2011

STYLE 1:
PIN 1. EMITTER
2. COLLECTOR
3. COLLECTOR
4. EMITTER
5. EMITTER
6. BASE
7. BASE
8. EMITTER

STYLE 2:
PIN 1. COLLECTOR, DIE, #1
2. COLLECTOR, #1
3. COLLECTOR, #2
4. COLLECTOR, #2
5. BASE, #2
6. EMITTER, #2
7. BASE, #1
8. EMITTER, #1

STYLE 3:
PIN 1. DRAIN, DIE #1
2. DRAIN, #1
3. DRAIN, #2
4. DRAIN, #2
5. GATE, #2
6. SOURCE, #2
7. GATE, #1
8. SOURCE, #1

STYLE 4:
PIN 1. ANODE
2. ANODE
3. ANODE
4. ANODE
5. ANODE
6. ANODE
7. ANODE
8. COMMON CATHODE

STYLE 5:
PIN 1. DRAIN
2. DRAIN
3. DRAIN
4. DRAIN
5. GATE
6. GATE
7. SOURCE
8. SOURCE

STYLE 6:
PIN 1. SOURCE
2. DRAIN
3. DRAIN
4. SOURCE
5. SOURCE
6. GATE
7. GATE
8. SOURCE

STYLE 7:
PIN 1. INPUT
2. EXTERNAL BYPASS
3. THIRD STAGE SOURCE
4. GROUND
5. DRAIN
6. GATE 3
7. SECOND STAGE Vd
8. FIRST STAGE Vd

STYLE 8:
PIN 1. COLLECTOR, DIE #1
2. BASE, #1
3. BASE, #2
4. COLLECTOR, #2
5. COLLECTOR, #2
6. EMITTER, #2
7. EMITTER, #1
8. COLLECTOR, #1

STYLE 9:
PIN 1. EMITTER, COMMON
2. COLLECTOR, DIE #1
3. COLLECTOR, DIE #2
4. EMITTER, COMMON
5. EMITTER, COMMON
6. BASE, DIE #2
7. BASE, DIE #1
8. EMITTER, COMMON

STYLE 10:
PIN 1. GROUND
2. BIAS 1
3. OUTPUT
4. GROUND
5. GROUND
6. BIAS 2
7. INPUT
8. GROUND

STYLE 11:
PIN 1. SOURCE 1
2. GATE 1
3. SOURCE 2
4. GATE 2
5. DRAIN 2
6. DRAIN 2
7. DRAIN 1
8. DRAIN 1

STYLE 12:
PIN 1. SOURCE
2. SOURCE
3. SOURCE
4. GATE
5. DRAIN
6. DRAIN
7. DRAIN
8. DRAIN

STYLE 13:
PIN 1. N.C.
2. SOURCE
3. SOURCE
4. GATE
5. DRAIN
6. DRAIN
7. DRAIN
8. DRAIN

STYLE 14:
PIN 1. N−SOURCE
2. N−GATE
3. P−SOURCE
4. P−GATE
5. P−DRAIN
6. P−DRAIN
7. N−DRAIN
8. N−DRAIN

STYLE 15:
PIN 1. ANODE 1
2. ANODE 1
3. ANODE 1
4. ANODE 1
5. CATHODE, COMMON
6. CATHODE, COMMON
7. CATHODE, COMMON
8. CATHODE, COMMON

STYLE 16:
PIN 1. EMITTER, DIE #1
2. BASE, DIE #1
3. EMITTER, DIE #2
4. BASE, DIE #2
5. COLLECTOR, DIE #2
6. COLLECTOR, DIE #2
7. COLLECTOR, DIE #1
8. COLLECTOR, DIE #1

STYLE 17:
PIN 1. VCC
2. V2OUT
3. V1OUT
4. TXE
5. RXE
6. VEE
7. GND
8. ACC

STYLE 18:
PIN 1. ANODE
2. ANODE
3. SOURCE
4. GATE
5. DRAIN
6. DRAIN
7. CATHODE
8. CATHODE

STYLE 19:
PIN 1. SOURCE 1
2. GATE 1
3. SOURCE 2
4. GATE 2
5. DRAIN 2
6. MIRROR 2
7. DRAIN 1
8. MIRROR 1

STYLE 20:
PIN 1. SOURCE (N)
2. GATE (N)
3. SOURCE (P)
4. GATE (P)
5. DRAIN
6. DRAIN
7. DRAIN
8. DRAIN

STYLE 21:
PIN 1. CATHODE 1
2. CATHODE 2
3. CATHODE 3
4. CATHODE 4
5. CATHODE 5
6. COMMON ANODE
7. COMMON ANODE
8. CATHODE 6

STYLE 22:
PIN 1. I/O LINE 1
2. COMMON CATHODE/VCC
3. COMMON CATHODE/VCC
4. I/O LINE 3
5. COMMON ANODE/GND
6. I/O LINE 4
7. I/O LINE 5
8. COMMON ANODE/GND

STYLE 23:
PIN 1. LINE 1 IN
2. COMMON ANODE/GND
3. COMMON ANODE/GND
4. LINE 2 IN
5. LINE 2 OUT
6. COMMON ANODE/GND
7. COMMON ANODE/GND
8. LINE 1 OUT

STYLE 24:
PIN 1. BASE
2. EMITTER
3. COLLECTOR/ANODE
4. COLLECTOR/ANODE
5. CATHODE
6. CATHODE
7. COLLECTOR/ANODE
8. COLLECTOR/ANODE

STYLE 25:
PIN 1. VIN
2. N/C
3. REXT
4. GND
5. IOUT
6. IOUT
7. IOUT
8. IOUT

STYLE 26:
PIN 1. GND
2. dv/dt
3. ENABLE
4. ILIMIT
5. SOURCE
6. SOURCE
7. SOURCE
8. VCC

STYLE 27:
PIN 1. ILIMIT
2. OVLO
3. UVLO
4. INPUT+
5. SOURCE
6. SOURCE
7. SOURCE
8. DRAIN

STYLE 28:
PIN 1. SW_TO_GND
2. DASIC_OFF
3. DASIC_SW_DET
4. GND
5. V_MON
6. VBULK
7. VBULK
8. VIN

STYLE 29:
PIN 1. BASE, DIE #1
2. EMITTER, #1
3. BASE, #2
4. EMITTER, #2
5. COLLECTOR, #2
6. COLLECTOR, #2
7. COLLECTOR, #1
8. COLLECTOR, #1

STYLE 30:
PIN 1. DRAIN 1
2. DRAIN 1
3. GATE 2
4. SOURCE 2
5. SOURCE 1/DRAIN 2
6. SOURCE 1/DRAIN 2
7. SOURCE 1/DRAIN 2
8. GATE 1

DOCUMENT NUMBER:	**98ASB42564B**	Electronic versions are uncontrolled except when accessed directly from the Document Repository. Printed versions are uncontrolled except when stamped "CONTROLLED COPY" in red.	
DESCRIPTION:	**SOIC−8 NB**		**PAGE 2 OF 2**

onsemi and ONSEMI. are trademarks of Semiconductor Components Industries, LLC dba **onsemi** or its subsidiaries in the United States and/or other countries. **onsemi** reserves the right to make changes without further notice to any products herein. **onsemi** makes no warranty, representation or guarantee regarding the suitability of its products for any particular purpose, nor does **onsemi** assume any liability arising out of the application or use of any product or circuit, and specifically disclaims any and all liability, including without limitation special, consequential or incidental damages. **onsemi** does not convey any license under its patent rights nor the rights of others.

© Semiconductor Components Industries, LLC, 2019

onsemi, ONSEMI , and other names, marks, and brands are registered and/or common law trademarks of Semiconductor Components Industries, LLC dba "**onsemi**" or its affiliates and/or subsidiaries in the United States and/or other countries. **onsemi** owns the rights to a number of patents, trademarks, copyrights, trade secrets, and other intellectual property. A listing of **onsemi**'s product/patent coverage may be accessed at www.onsemi.com/site/pdf/Patent−Marking.pdf. **onsemi** reserves the right to make changes at any time to any products or information herein, without notice. The information herein is provided "as−is" and **onsemi** makes no warranty, representation or guarantee regarding the accuracy of the information, product features, availability, functionality, or suitability of its products for any particular purpose, nor does **onsemi** assume any liability arising out of the application or use of any product or circuit, and specifically disclaims any and all liability, including without limitation special, consequential or incidental damages. Buyer is responsible for its products and applications using **onsemi** products, including compliance with all laws, regulations and safety requirements or standards, regardless of any support or applications information provided by **onsemi**. "Typical" parameters which may be provided in **onsemi** data sheets and/or specifications can and do vary in different applications and actual performance may vary over time. All operating parameters, including "Typicals" must be validated for each customer application by customer's technical experts. **onsemi** does not convey any license under any of its intellectual property rights nor the rights of others. **onsemi** products are not designed, intended, or authorized for use as a critical component in life support systems or any FDA Class 3 medical devices or medical devices with a same or similar classification in a foreign jurisdiction or any devices intended for implantation in the human body. Should Buyer purchase or use **onsemi** products for any such unintended or unauthorized application, Buyer shall indemnify and hold **onsemi** and its officers, employees, subsidiaries, affiliates, and distributors harmless against all claims, costs, damages, and expenses, and reasonable attorney fees arising out of, directly or indirectly, any claim of personal injury or death associated with such unintended or unauthorized use, even if such claim alleges that **onsemi** was negligent regarding the design or manufacture of the part. **onsemi** is an Equal Opportunity/Affirmative Action Employer. This literature is subject to all applicable copyright laws and is not for resale in any manner.

PUBLICATION ORDERING INFORMATION

LITERATURE FULFILLMENT:
Email Requests to: orderlit@onsemi.com

onsemi Website: www.onsemi.com

TECHNICAL SUPPORT
North American Technical Support:
Voice Mail: 1 800−282−9855 Toll Free USA/Canada
Phone: 011 421 33 790 2910

Europe, Middle East and Africa Technical Support:
Phone: 00421 33 790 2910
For additional information, please contact your local Sales Representative

◊