Earth Leakage Detector

KA2803

Description

The KA2803 is designed for use in earth leakage circuit interrupters, for operation directly off the AC line in breakers. The input of the differential amplifier is connected to the secondary coil of Zero Current Transformer (ZCT). The amplified output of differential amplifier is integrated at external capacitor to gain adequate time delay. The level comparator generates a high level when earth leakage current is greater than the fixed level.

Features

- Low Power Consumption: 5 mW, 100 V/200 V
- Built-in Voltage Regulator
- High-gain Differential Amplifier
- 0.4 mA Output Current Pulse to Trigger SCRs
- Low External Part Count
- SOP Package, High Packing Density
- High Noise Immunity, Large Surge Margin
- Super Temperature Characteristic of Input Sensitivity
- Wide Operating Temperature Range:
  T_A=−25°C to +80°C for KA2803B and KA2803BDTF
  T_A = −25°C to +100°C for KA2803CDTF
- Operation from 12 V to 20 V Input

Functions

- Differential Amplifier
- Level Comparator
- Latch Circuit

ON Semiconductor®

www.onsemi.com

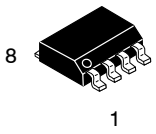

SOIC8
CASE 751EB

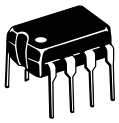

PDIP−8
CASE 626−05

MARKING DIAGRAM

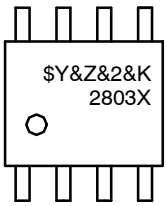

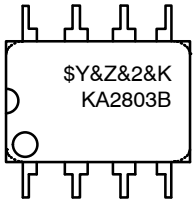

$Y	= ON Semiconductor Logo
&Z	= Assembly Plant Code
&2	= Data Code (Year & Week)
&K	= Lot
KA2803B or 2803X	= Specific Device Code X = B or C

ORDERING INFORMATION

See detailed ordering and shipping information on page 10 of this data sheet.

© Semiconductor Components Industries, LLC, 2016

BLOCK DIAGRAM

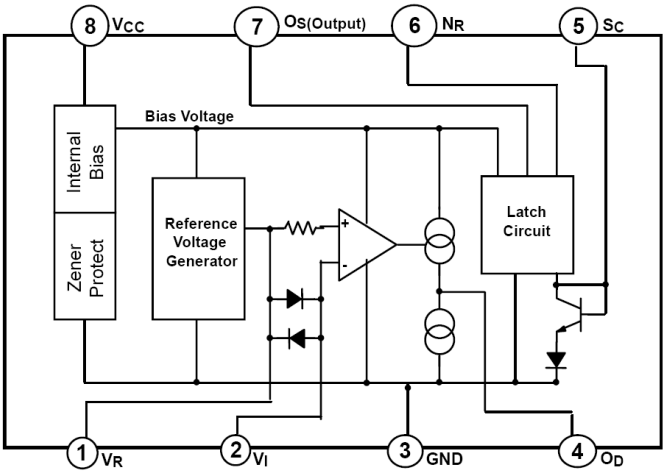

Figure 1. Block Diagram

PIN CONFIGURATION

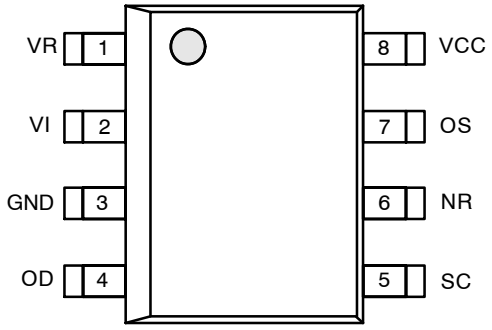

Figure 2. Pin Assignment

PIN DESCRIPTION

Pin No.	Name	Description
1	VR	Non inverting input for current sensing amplifier
2	VI	Inverting Input for current sensing amplifier
3	GND	Ground
4	OD	Output of current sensing amplifier
5	SC	Input of latch circuit
6	NR	Noise absorption
7	OS	Gate drive for external SCR
8	VCC	Power supply input for KA2803 circuitry

APPLICATION CIRCUITS

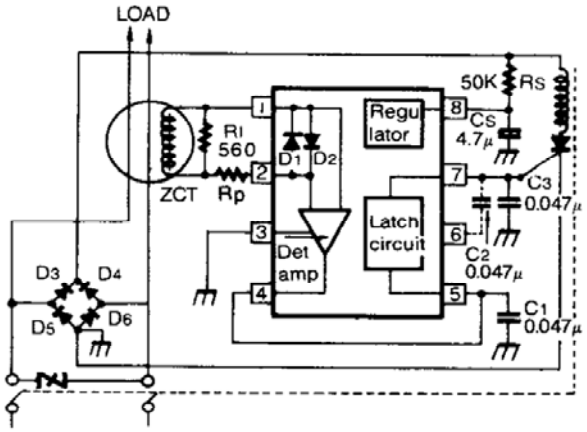

Figure 3. Full-wave Application Circuit

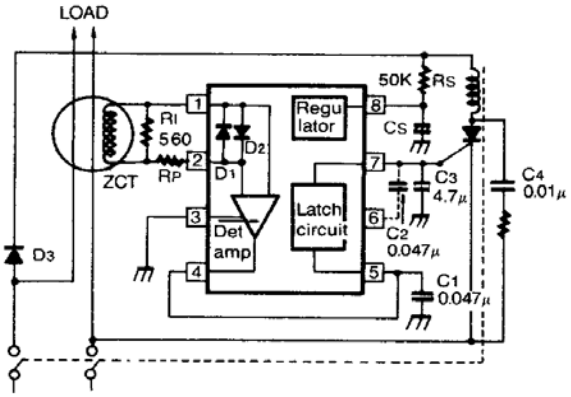

Figure 4. Half-wave Application Circuit

APPLICATION INFORMATION

(Refer to full-wave application circuit in Figure 3)

Figure 3 shows the KA2803 connected in a typical leakage current detector system. The power is applied to the V_{CC} terminal (Pin 8) directly from the power line. The resistor R_S and capacitor C_S are chosen so that Pin 8 voltage is at least 12 V. The value of C_S is recommended above 1 μF.

If the leakage current is at the load, it is detected by the Zero Current Transformer (ZCT). The output voltage signal of ZCT is amplified by the differential amplifier of the KA2803 internal circuit and appears as a half-cycle sine wave signal referred to input signal at the output of the amplifier. The amplifier closed-loop gain is fixed about 1000 times with internal feedback resistor to compensate for Zero Current Transformer (ZCT) variations. The resistor R_L should be selected so that the breaker satisfies the required sensing current. The protection resistor R_P is not usually used when high current is injected at the breaker; this resistor should be used to protect the earth leakage detector IC (KA2803). The range of R_P is from several hundred Ω to several kΩ.

Capacitor C_1 is for the noise canceller and a standard value of C_1 is 0.047 μF. Capacitor C_2 is also a noise canceller capacitance, but it is not usually used.

When high noise is present, a 0.047 μF capacitor may be connected between Pins 6 and 7. The amplified signal finally appears at the Pin 7 with pulse signal through the internal latch circuit of the KA2803. This signal drives the gate of the external SCR, which energizes the trip coil, which opens the circuit breaker. The trip time of the breaker is determined by capacitor C_3 and the mechanism breaker. This capacitor should be selected under 1 μF to satisfy the required trip time. The full-wave bridge supplies power to the KA2803 during both the positive and negative half cycles of the line voltage. This allows the hot and neutral lines to be interchanged.

ABSOLUTE MAXIMUM RATINGS

Symbol	Parameter	Min.	Max.	Unit
V_{CC}	Supply Voltage		20	V
I_{CC}	Supply Current		8	mA
P_D	Power Dissipation		300	mW
T_L	Lead Temperature, Soldering 10 Seconds		260	°C
T_A	Operation Temperature Range for KA2803B and KA2803BDTF	−25	80	°C
	Operation Temperature Range for KA2803CDTF	−25	+100	°C
T_{STG}	Storage Temperature Range	−65	+150	°C

Stresses exceeding those listed in the Maximum Ratings table may damage the device. If any of these limits are exceeded, device functionality should not be assumed, damage may occur and reliability may be affected.

RECOMMENDED OPERATING CONDITIONS (For KA2803B and KA2803BDTF, T_A = −25°C to 80°C unless otherwise noted. For KA2803CDTF, T_A = −25°C to +100°C unless otherwise noted.)

Symbol	Parameter	Conditions		Test Circuit	Min.	Typ.	Max.	Units
I_{CC}	Supply Current 1	V_{CC} = 12V, V_R = OPEN, V_I = 2 V	T_A = −25°C	Figure 5			580	μA
			T_A = +25°C		300	400	530	
			T_A = +100°C				480	
V_T	Trip Voltage	V_{CC} = 16 V, V_R = 2 V~2.02 V, V_I = 2 V	T_A = +25°C	Figure 6	14	16	18	mV (rms)
$I_{O(D)}$	Differential Amplifier Current Current 1	V_{CC} = 16 V, V_R~V_I = 30 mV, V_{OD} = 1.2 V	T_A = +25°C	Figure 8	−12	−20	−30	μA
	Differential Amplifier Current Current 2	V_{CC} = 16 V, V_{OD} = 0.8 V,V_R, V_I Short = V_P	T_A = +25°C	Figure 9	17	27	37	
I_O	Output Current	V_{SC} = 1.4 V, V_{OS} = 0.8 V, V_{CC} = 16.0 V	T_A= −25°C	Figure 10	200	400	800	μA
			T_A= +25°C		200	400	800	
			T_A= +100°C		100	300	600	
V_{SCON}	Latch-On Voltage	V_{CC} = 16 V		Figure 11	0.7	1.0	1.4	V
I_{SCON}	Latch Input Current	V_{CC} = 16 V		Figure 12	−13	−7	−1	μA
I_{OSL}	Output Low Current	V_{CC} = 12 V, V_{OSL} = 0.2 V		Figure 13	200	800	1400	μA
V_{IDC}	Differential Input Clamp Voltage	V_{CC} = 16 V, I_{IDC} = 100 mA		Figure 14	0.4	1.2	2.0	V
V_{SM}	Maximum Current Voltage	I_{SM} = 7 mA		Figure 15	20	24	28	V
I_{S2}	Supply Current 2	V_{CC} = 12.0 V, V_{OSL} = 0.6 V		Figure 16	200	400	900	μA
V_{SOFF}	Latch-Off Supply Voltage	V_{OS} = 12.0 V		Figure 17	7	8	9	V
		V_{SC} = 1.8 V						
		I_{IDC} = 100.0 mA						
t_{ON}	Response Time	V_{CC} = 16 V, V_R−V_I = 0.3 V, 1 V < V_X < 5 V		Figure 18	2	3	4	ms

Functional operation above the stresses listed in the Recommended Operating Ranges is not implied. Extended exposure to stresses beyond the Recommended Operating Ranges limits may affect device reliability.

1. Guaranteed by design, not tested in production.

TEST CIRCUITS

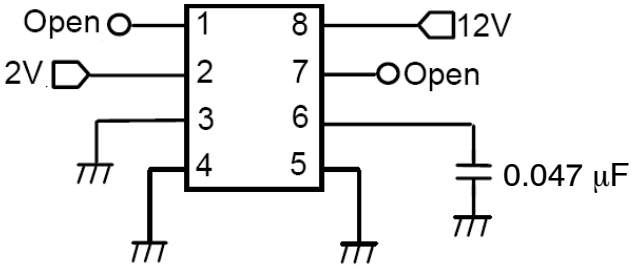

Figure 5. Supply Current 1

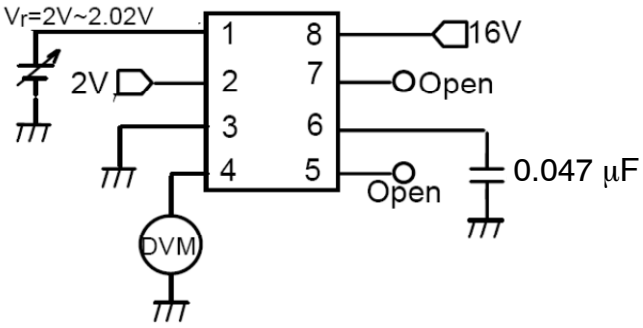

Figure 6. Trip Voltage

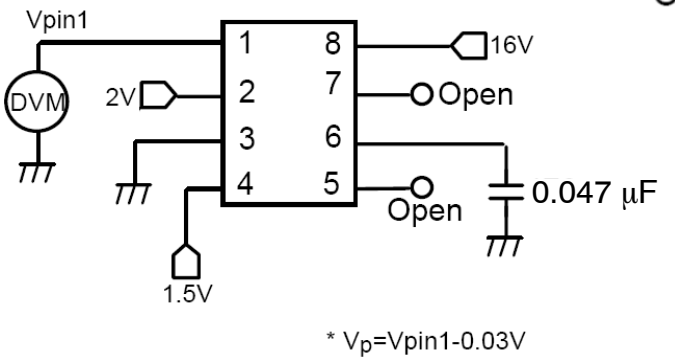

Figure 7. V_{PN1} for V_P Measurement

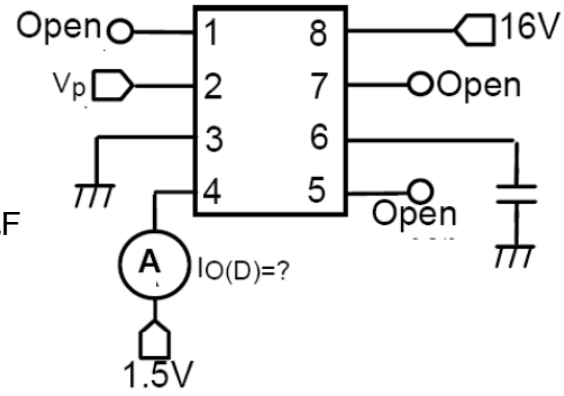

Figure 8. Differential Amplifier Output Current 1

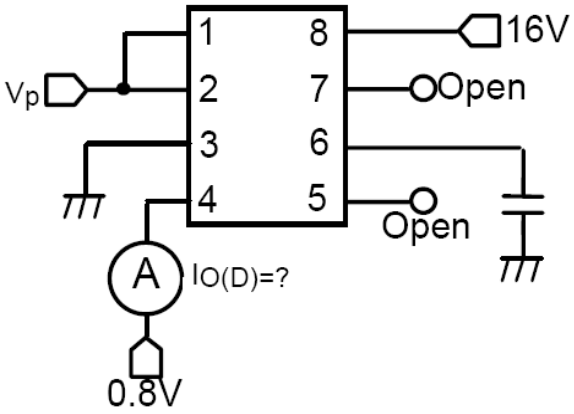

Figure 9. Differential Amplifier Output Current 2

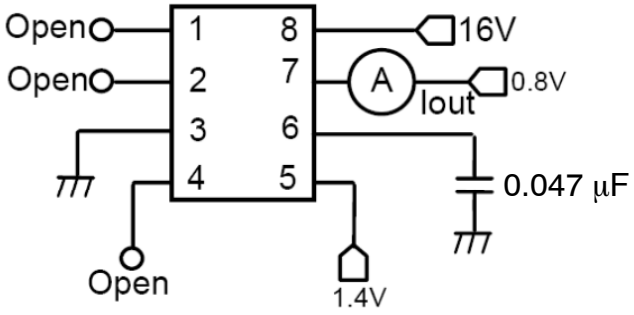

Figure 10. Output Current

TEST CIRCUITS (Continued)

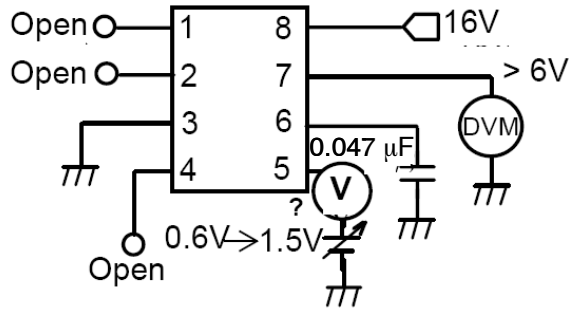

Figure 11. Latch-On Voltage

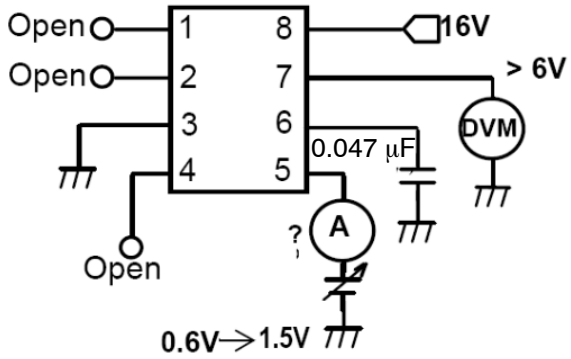

Figure 12. Latch Input Current

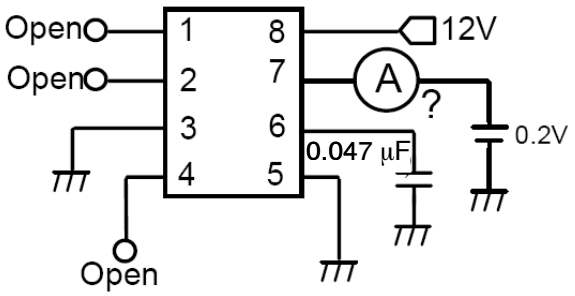

Figure 13. Output Low Current

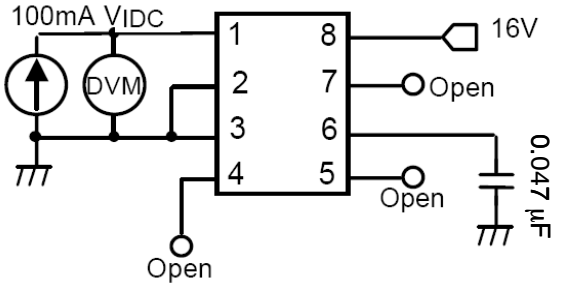

Figure 14. Differential Input Clamp Voltage

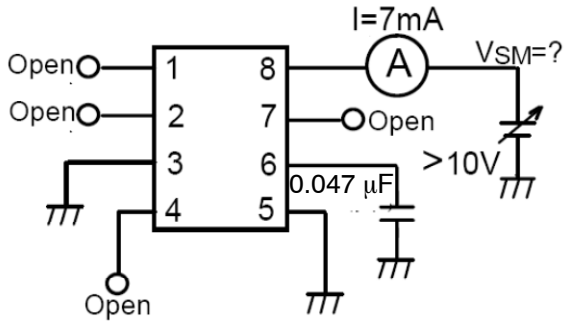

Figure 15. Maximum Current Voltage

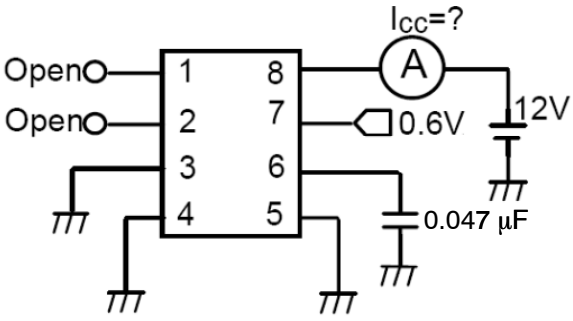

Figure 16. Supply Current 2

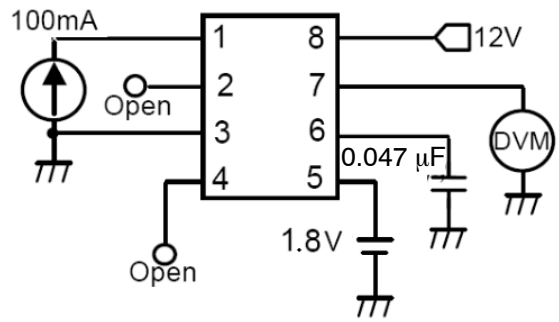

Figure 17. Latch-Off Supply Voltage

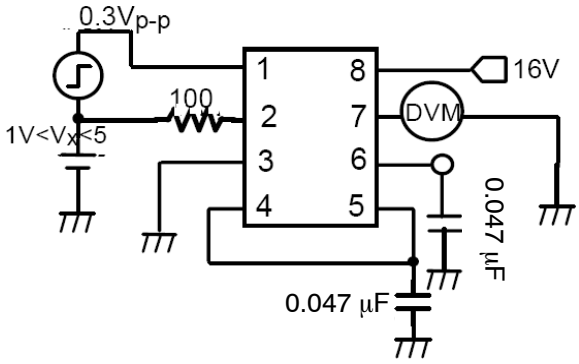

Figure 18. Response Time

TYPICAL PERFORMANCE CHARACTERISTICS

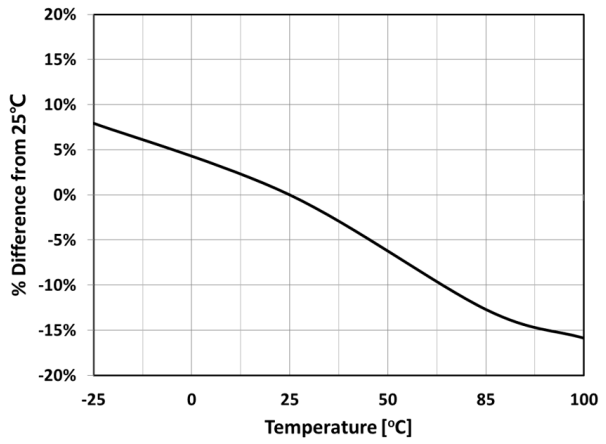

Figure 19. Supply Current

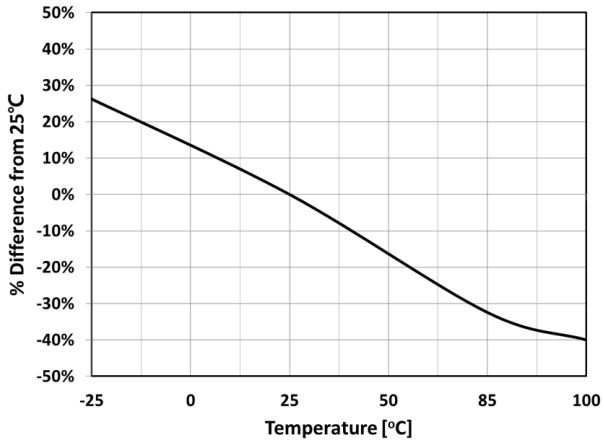

Figure 20. Differential Amplifier Output Current (V_R – V_I = 30 mV, V_{OD} = 1.2 V)

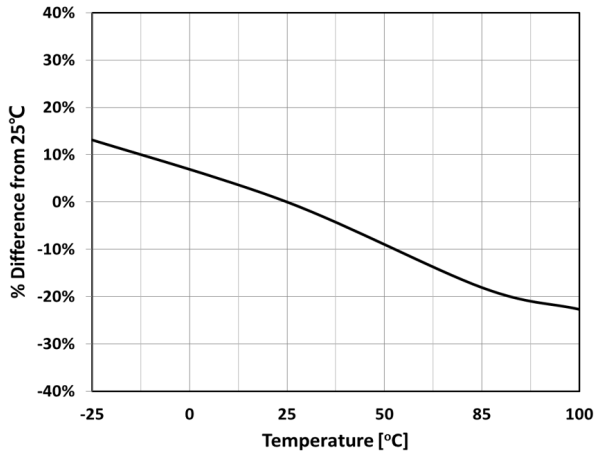

Figure 21. Differential Amplifier Output Current (V_R, V_I = V_P, V_{OD} = 0.8 V)

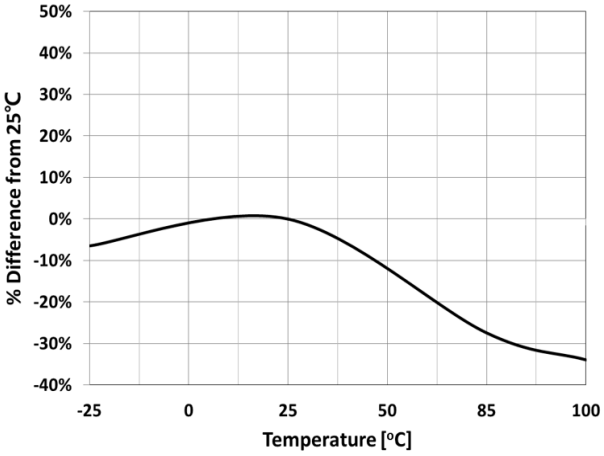

Figure 22. Output Current

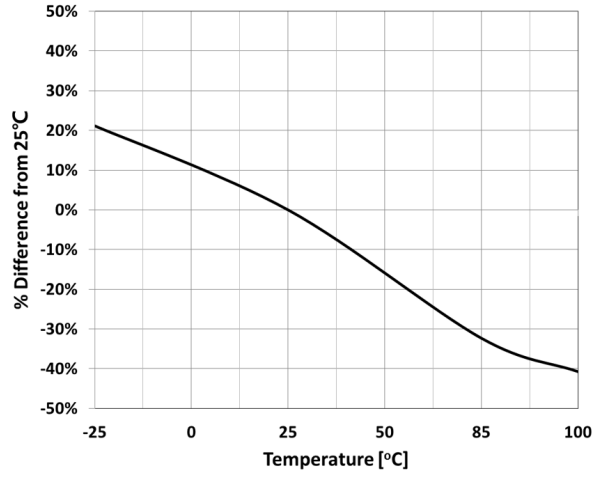

Figure 23. Output Low Current

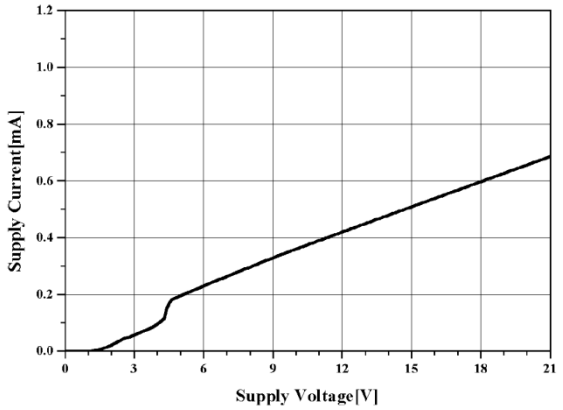

Figure 24. V_{CC} Voltage vs. Supply Current 1

TYPICAL PERFORMANCE CHARACTERISTICS (Continued)

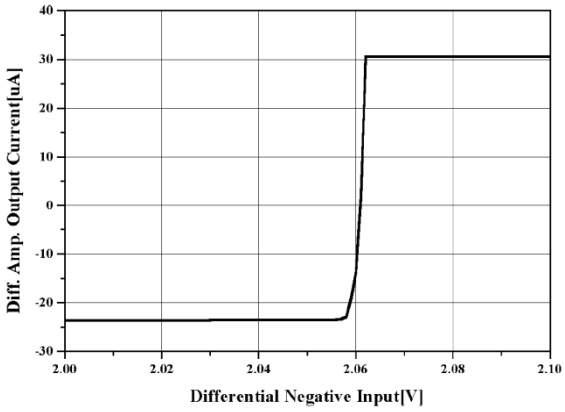

Figure 25. Differential Amplifier Output Current 1

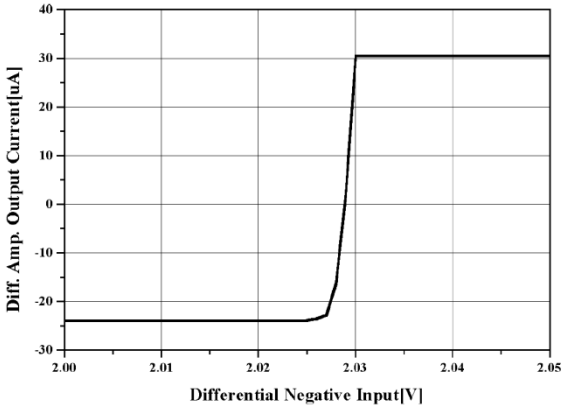

Figure 26. Differential Amplifier Output

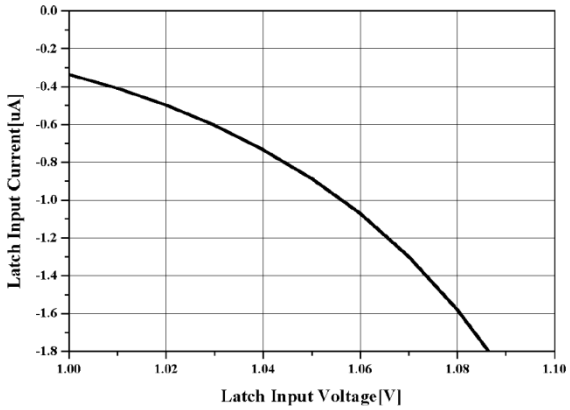

Figure 27. Latch Input Current

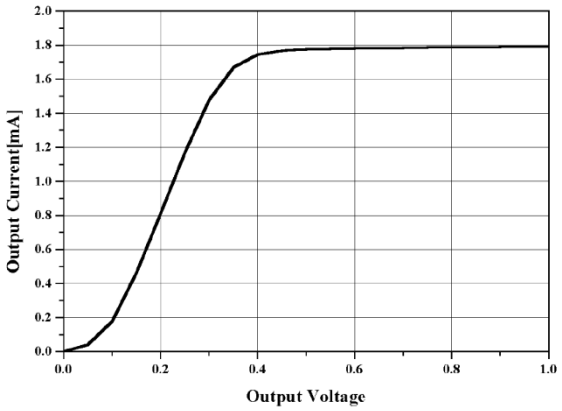

Figure 28. Output Low Current

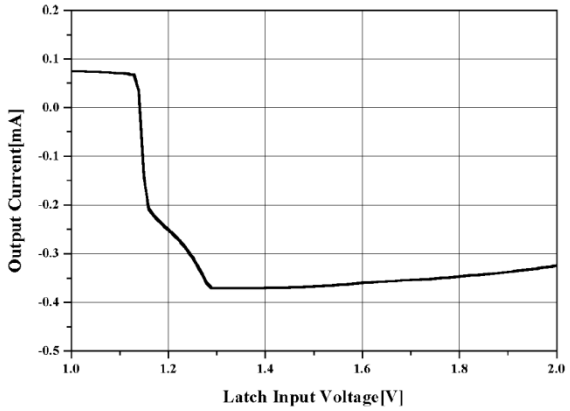

Figure 29. Output Current

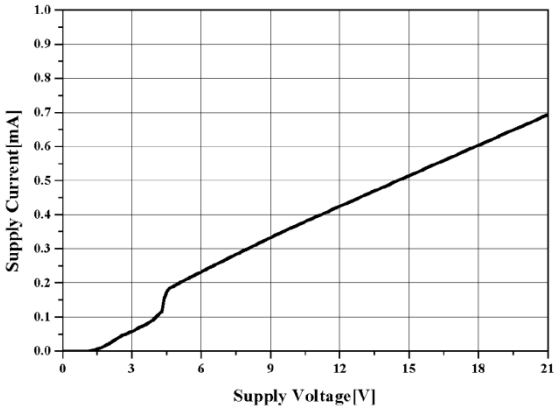

Figure 30. V_{CC} Voltage vs. Supply Current 2

TYPICAL PERFORMANCE CHARACTERISTICS (Continued)

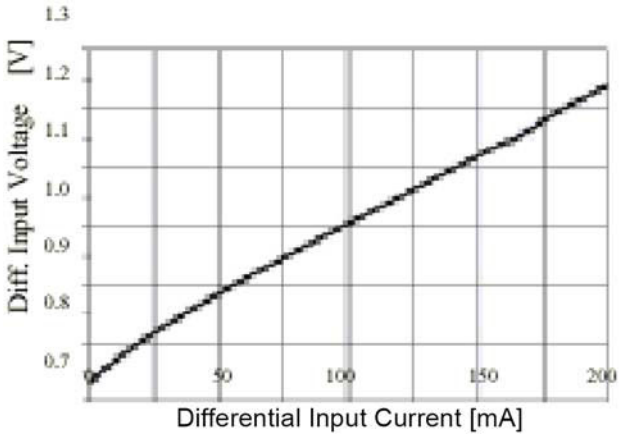

Figure 31. Differential Input Clamp Voltage

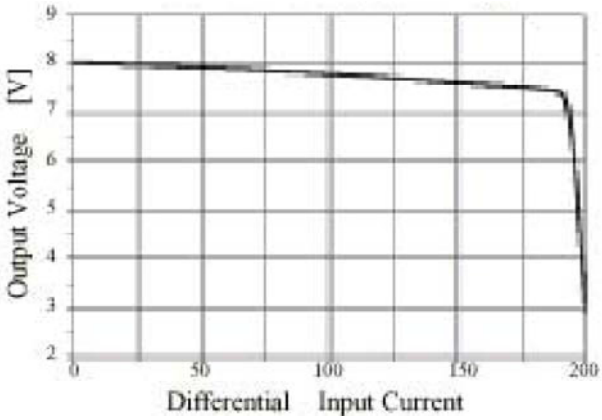

Figure 32. Latch−Off Supply Voltage

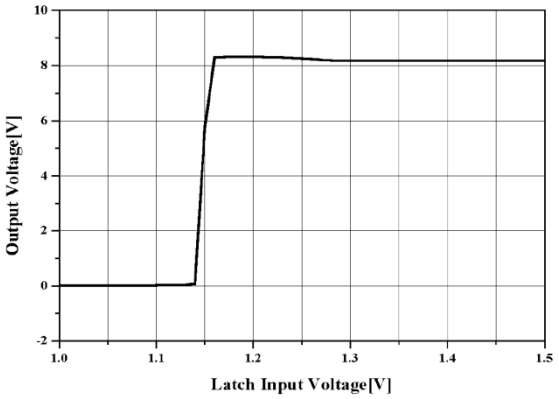

Figure 33. Latch−On Input Voltage

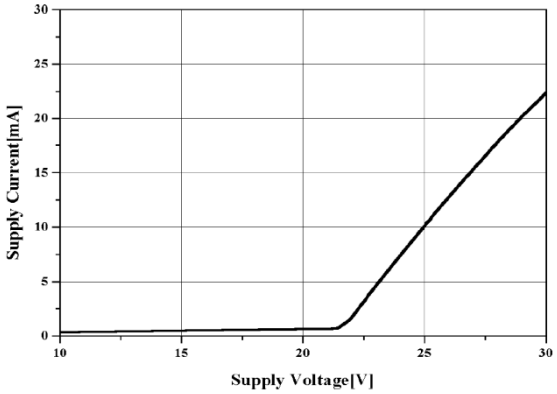

Figure 34. Maximum Supply

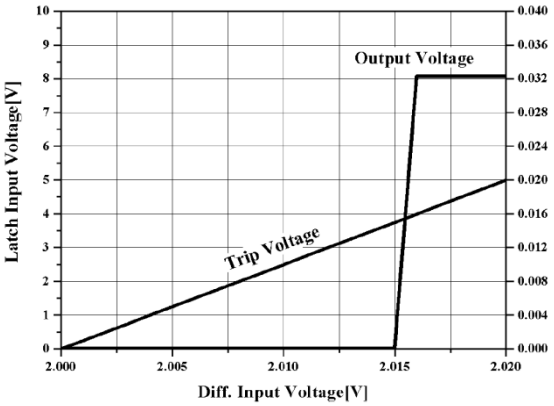

Figure 35. Trip and Output

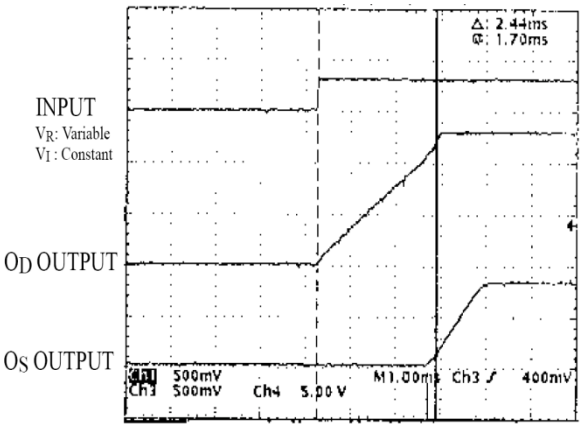

Figure 36. Output Response Time

ORDERING INFORMATION

Part Number	Operating Temperature Range	Package	Shipping†
KA2803CDTF	−25 to +100°C	8-lead, Small Outline Package (SOP)	3,000 / Tape& Reel
KA2803B	−25 to 80°C	8-lead, Plastic Dual Inline Package (PDIP)	3,000 / Tube
KA2703BDTF	−25 to 80°C	8-lead, Small Outline Package (SOP)	3,000 / Tape& Reel

†For information on tape and reel specifications, including part orientation and tape sizes, please refer to our Tape and Reel Packaging Specifications Brochure, BRD8011/D.

MECHANICAL CASE OUTLINE
PACKAGE DIMENSIONS

ON Semiconductor®



SCALE 1:1

PDIP–8
CASE 626–05
ISSUE P

DATE 22 APR 2015

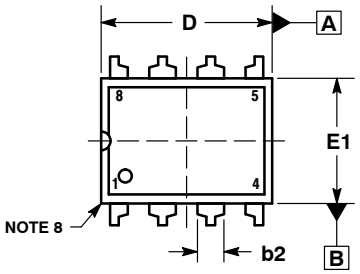

TOP VIEW

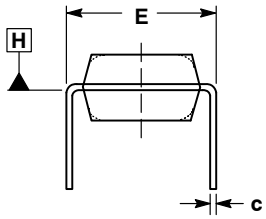

END VIEW
WITH LEADS CONSTRAINED
NOTE 5

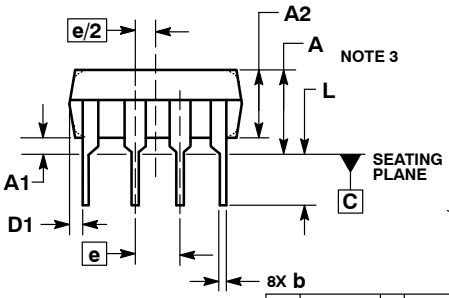

SIDE VIEW

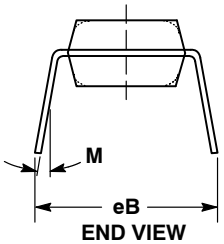

END VIEW
NOTE 6

NOTES:
1. DIMENSIONING AND TOLERANCING PER ASME Y14.5M, 1994.
2. CONTROLLING DIMENSION: INCHES.
3. DIMENSIONS A, A1 AND L ARE MEASURED WITH THE PACKAGE SEATED IN JEDEC SEATING PLANE GAUGE GS–3.
4. DIMENSIONS D, D1 AND E1 DO NOT INCLUDE MOLD FLASH OR PROTRUSIONS. MOLD FLASH OR PROTRUSIONS ARE NOT TO EXCEED 0.10 INCH.
5. DIMENSION E IS MEASURED AT A POINT 0.015 BELOW DATUM PLANE H WITH THE LEADS CONSTRAINED PERPENDICULAR TO DATUM C.
6. DIMENSION eB IS MEASURED AT THE LEAD TIPS WITH THE LEADS UNCONSTRAINED.
7. DATUM PLANE H IS COINCIDENT WITH THE BOTTOM OF THE LEADS, WHERE THE LEADS EXIT THE BODY.
8. PACKAGE CONTOUR IS OPTIONAL (ROUNDED OR SQUARE CORNERS).

	INCHES		MILLIMETERS	
DIM	MIN	MAX	MIN	MAX
A	----	0.210	---	5.33
A1	0.015	----	0.38	---
A2	0.115	0.195	2.92	4.95
b	0.014	0.022	0.35	0.56
b2	0.060 TYP		1.52 TYP	
C	0.008	0.014	0.20	0.36
D	0.355	0.400	9.02	10.16
D1	0.005	----	0.13	---
E	0.300	0.325	7.62	8.26
E1	0.240	0.280	6.10	7.11
e	0.100 BSC		2.54 BSC	
eB	----	0.430	---	10.92
L	0.115	0.150	2.92	3.81
M	----	10°	---	10°

STYLE 1:
PIN 1. AC IN
2. DC + IN
3. DC – IN
4. AC IN
5. GROUND
6. OUTPUT
7. AUXILIARY
8. V_{CC}

GENERIC MARKING DIAGRAM*

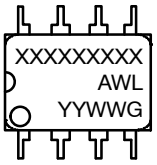

XXXX = Specific Device Code
A = Assembly Location
WL = Wafer Lot
YY = Year
WW = Work Week
G = Pb–Free Package

*This information is generic. Please refer to device data sheet for actual part marking. Pb–Free indicator, “G” or microdot “ ▪”, may or may not be present.

DOCUMENT NUMBER:	98ASB42420B	Electronic versions are uncontrolled except when accessed directly from the Document Repository. Printed versions are uncontrolled except when stamped “CONTROLLED COPY” in red.
DESCRIPTION:	PDIP–8	PAGE 1 OF 1

ON Semiconductor and ON are trademarks of Semiconductor Components Industries, LLC dba ON Semiconductor or its subsidiaries in the United States and/or other countries. ON Semiconductor reserves the right to make changes without further notice to any products herein. ON Semiconductor makes no warranty, representation or guarantee regarding the suitability of its products for any particular purpose, nor does ON Semiconductor assume any liability arising out of the application or use of any product or circuit, and specifically disclaims any and all liability, including without limitation special, consequential or incidental damages. ON Semiconductor does not convey any license under its patent rights nor the rights of others.

© Semiconductor Components Industries, LLC, 2019

SOIC8
CASE 751EB
ISSUE A

DATE 24 AUG 2017

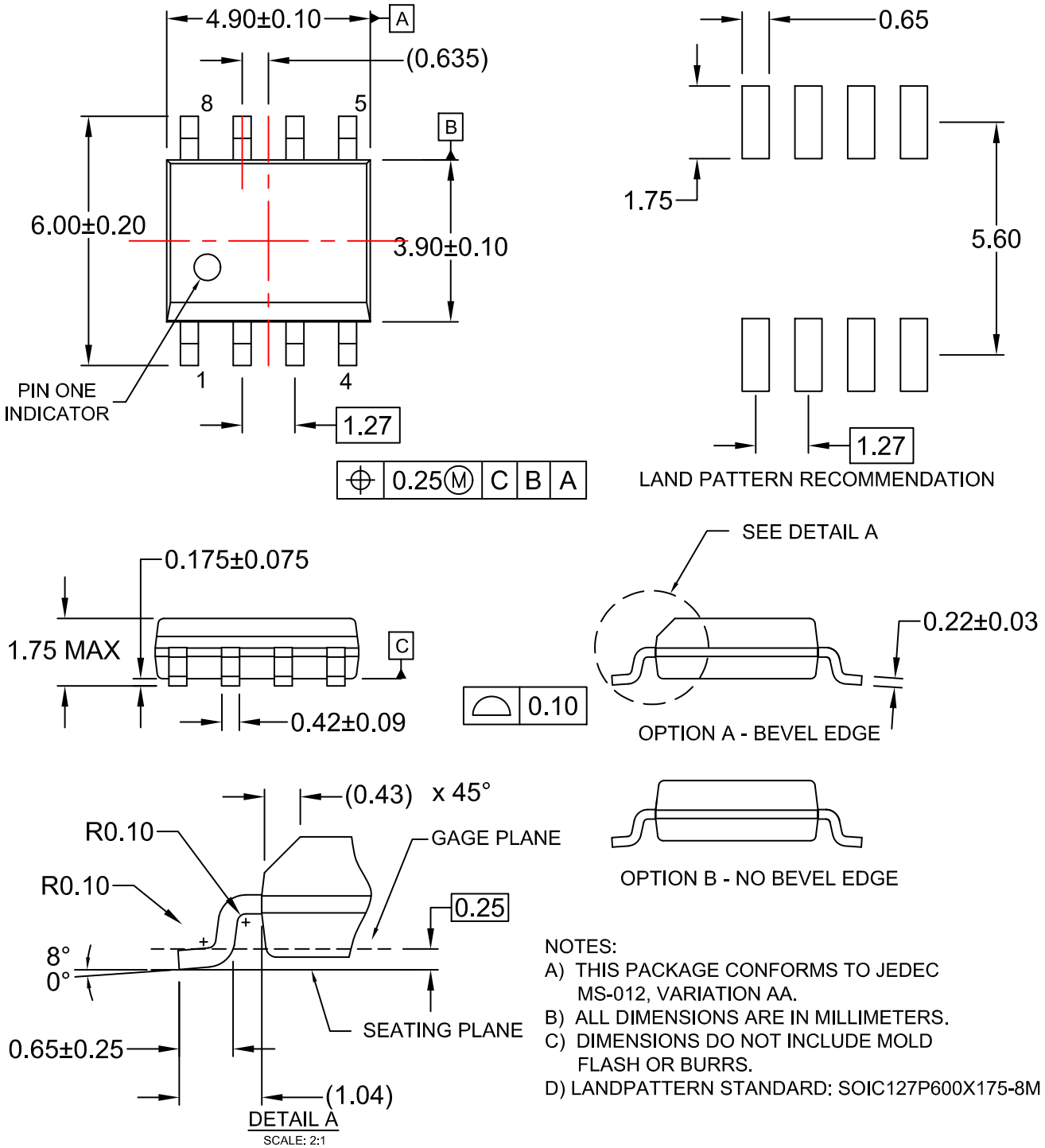

NOTES:
A) THIS PACKAGE CONFORMS TO JEDEC MS-012, VARIATION AA.
B) ALL DIMENSIONS ARE IN MILLIMETERS.
C) DIMENSIONS DO NOT INCLUDE MOLD FLASH OR BURRS.
D) LANDPATTERN STANDARD: SOIC127P600X175-8M

DOCUMENT NUMBER:	**98AON13735G**	Electronic versions are uncontrolled except when accessed directly from the Document Repository. Printed versions are uncontrolled except when stamped "CONTROLLED COPY" in red.
DESCRIPTION:	**SOIC8**	**PAGE 1 OF 1**

ON Semiconductor and ON are trademarks of Semiconductor Components Industries, LLC dba ON Semiconductor or its subsidiaries in the United States and/or other countries. ON Semiconductor reserves the right to make changes without further notice to any products herein. ON Semiconductor makes no warranty, representation or guarantee regarding the suitability of its products for any particular purpose, nor does ON Semiconductor assume any liability arising out of the application or use of any product or circuit, and specifically disclaims any and all liability, including without limitation special, consequential or incidental damages. ON Semiconductor does not convey any license under its patent rights nor the rights of others.

© Semiconductor Components Industries, LLC, 2019

onsemi, ONSEMI , and other names, marks, and brands are registered and/or common law trademarks of Semiconductor Components Industries, LLC dba "**onsemi**" or its affiliates and/or subsidiaries in the United States and/or other countries. **onsemi** owns the rights to a number of patents, trademarks, copyrights, trade secrets, and other intellectual property. A listing of **onsemi**'s product/patent coverage may be accessed at www.onsemi.com/site/pdf/Patent−Marking.pdf. **onsemi** reserves the right to make changes at any time to any products or information herein, without notice. The information herein is provided "as−is" and **onsemi** makes no warranty, representation or guarantee regarding the accuracy of the information, product features, availability, functionality, or suitability of its products for any particular purpose, nor does **onsemi** assume any liability arising out of the application or use of any product or circuit, and specifically disclaims any and all liability, including without limitation special, consequential or incidental damages. Buyer is responsible for its products and applications using **onsemi** products, including compliance with all laws, regulations and safety requirements or standards, regardless of any support or applications information provided by **onsemi**. "Typical" parameters which may be provided in **onsemi** data sheets and/or specifications can and do vary in different applications and actual performance may vary over time. All operating parameters, including "Typicals" must be validated for each customer application by customer's technical experts. **onsemi** does not convey any license under any of its intellectual property rights nor the rights of others. **onsemi** products are not designed, intended, or authorized for use as a critical component in life support systems or any FDA Class 3 medical devices or medical devices with a same or similar classification in a foreign jurisdiction or any devices intended for implantation in the human body. Should Buyer purchase or use **onsemi** products for any such unintended or unauthorized application, Buyer shall indemnify and hold **onsemi** and its officers, employees, subsidiaries, affiliates, and distributors harmless against all claims, costs, damages, and expenses, and reasonable attorney fees arising out of, directly or indirectly, any claim of personal injury or death associated with such unintended or unauthorized use, even if such claim alleges that **onsemi** was negligent regarding the design or manufacture of the part. **onsemi** is an Equal Opportunity/Affirmative Action Employer. This literature is subject to all applicable copyright laws and is not for resale in any manner.

PUBLICATION ORDERING INFORMATION

LITERATURE FULFILLMENT:
Email Requests to: orderlit@onsemi.com

onsemi Website: www.onsemi.com

TECHNICAL SUPPORT
North American Technical Support:
Voice Mail: 1 800−282−9855 Toll Free USA/Canada
Phone: 011 421 33 790 2910

Europe, Middle East and Africa Technical Support:
Phone: 00421 33 790 2910
For additional information, please contact your local Sales Representative

◊