March 2001
Revised March 2001

74LVTH16501
Low Voltage 18-Bit Universal Bus Transceivers with Bushold and 3-STATE Outputs

General Description

The LVTH16501 is an 18-bit universal bus transceiver combining D-type latches and D-type flip-flops to allow data flow in transparent, latched, and clocked modes.

Data flow in each direction is controlled by output-enable (OEAB and $\overline{\text{OEBA}}$), latch-enable (LEAB and LEBA), and clock (CLKAB and CLKBA) inputs.

The LVTH16501 data inputs include bushold, eliminating the need for external pull-up resistors to hold unused inputs.

The transceiver is designed for low voltage (3.3V) V_{CC} applications, but with the capability to provide a TTL interface to a 5V environment. The LVTH16501 is fabricated with an advanced BiCMOS technology to achieve high speed operation similar to 5V ABT while maintaining low power dissipation.

Features

- Input and output interface capability to systems at 5V V_{CC}
- Bushold data inputs eliminate the need for external pull-up resistors to hold unused inputs
- Live insertion/extraction permitted
- Power up/down high impedance provides glitch-free bus loading
- Outputs source/sink –32 mA/+64 mA
- Functionally compatible with the 74 series 16501
- ESD Performance:
  Human-Body Model > 2000V
  Machine Model > 200V
  Charged-Device Model > 1000V

Ordering Code:

Order Number	Package Number	Package Description
74LVTH16501MEA	MS56A	56-Lead Shrink Small Outline Package (SSOP), JEDEC MO-118, 0.300 Wide
74LVTH16501MTD	MTD56	56-Lead Thin Shrink Small Outline Package (TSSOP), JEDEC MO-153, 6.1mm Wide

Devices also available in Tape and Reel. Specify by appending the suffix letter "X" to the ordering code.

© 2001 Fairchild Semiconductor Corporation

Connection Diagram

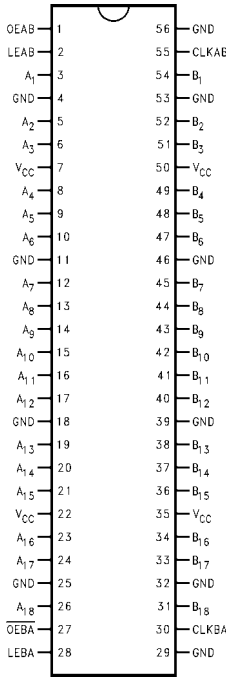

Pin Descriptions

Pin Names	Description
A_1–A_{18}	Data Register A Inputs/3-STATE Outputs
B_1–B_{18}	Data Register B Inputs/3-STATE Outputs
CLKAB, CLKBA	Clock Pulse Inputs
LEAB, LEBA	Latch Enable Inputs
OEAB, $\overline{OEBA}$	Output Enable Inputs

Function Table (Note 1)

Inputs				Output
OEAB	LEAB	CLKAB	A_n	B_n
L	X	X	X	Z
H	H	X	L	L
H	H	X	H	H
H	L	↑	L	L
H	L	↑	H	H
H	L	H	X	B_0 (Note 2)
H	L	L	X	B_0 (Note 3)

H = HIGH Voltage Level L = LOW Voltage Level
X = Immaterial Z = High Impedance
↑ = LOW-to-HIGH Clock Transition

Note 1: A-to-B data flow is shown: B-to-A flow is similar but uses $\overline{OEBA}$, LEBA, and CLKBA. $\overline{OEBA}$ is active LOW

Note 2: Output level before the indicated steady-state input conditions were established, provided that CLKAB was HIGH before LEAB went LOW.

Note 3: Output level before the indicated steady-state input conditions were established.

Functional Description

For A-to-B data flow, the device operates in the transparent mode when LEAB is HIGH. When LEAB is LOW, the A data is latched if CLKAB is held at a HIGH or LOW logic level. If LEAB is LOW, the A bus data is stored in the latch/flip-flop on the LOW-to-HIGH transition of CLKAB. Output-enable OEAB is active-HIGH. When OEAB is HIGH, the outputs are active. When OEAB is LOW, the outputs are in the high-impedance state.

Data flow for B to A is similar to that of A-to-B but uses $\overline{OEBA}$, LEBA, and CLKBA. The output enables are complementary (OEAB is active-HIGH and $\overline{OEBA}$ is active-LOW).

Logic Diagram

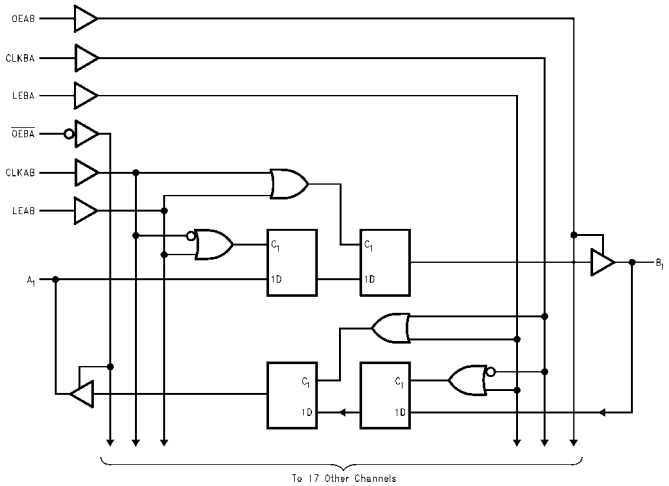

Absolute Maximum Ratings(Note 4)

Symbol	Parameter	Value	Conditions	Units
V_{CC}	Supply Voltage	−0.5 to +4.6		V
V_I	DC Input Voltage	−0.5 to +7.0		V
V_O	DC Output Voltage	−0.5 to +7.0	Output in 3-STATE	V
		−0.5 to +7.0	Output in HIGH or LOW State (Note 5)	V
I_{IK}	DC Input Diode Current	−50	V_I < GND	mA
I_{OK}	DC Output Diode Current	−50	V_O < GND	mA
I_O	DC Output Current	64	V_O > V_{CC} Output at HIGH State	mA
		128	V_O > V_{CC} Output at LOW State	
I_{CC}	DC Supply Current per Supply Pin	±64		mA
I_{GND}	DC Ground Current per Ground Pin	±128		mA
T_{STG}	Storage Temperature	−65 to +150		°C

Recommended Operating Conditions

Symbol	Parameter	Min	Max	Units
V_{CC}	Supply Voltage	2.7	3.6	V
V_I	Input Voltage	0	5.5	V
I_{OH}	HIGH-Level Output Current		−32	mA
I_{OL}	LOW-Level Output Current		64	mA
T_A	Free-Air Operating Temperature	−40	85	°C
$\Delta t/\Delta V$	Input Edge Rate, V_{IN} = 0.8V–2.0V, V_{CC} = 3.0V	0	10	ns/V

Note 4: Absolute Maximum continuous ratings are those values beyond which damage to the device may occur. Exposure to these conditions or conditions beyond those indicated may adversely affect device reliability. Functional operation under absolute maximum rated conditions is not implied.

Note 5: I_O Absolute Maximum Rating must be observed.

DC Electrical Characteristics

Symbol	Parameter		V_{CC} (V)	$T_A = -40°C$ to $+85°C$		Units	Conditions
				Min	Max		
V_{IK}	Input Clamp Diode Voltage		2.7		−1.2	V	$I_I = -18$ mA
V_{IH}	Input HIGH Voltage		2.7–3.6	2.0		V	$V_O \le 0.1V$ or
V_{IL}	Input LOW Voltage		2.7–3.6		0.8		$V_O \ge V_{CC} - 0.1V$
V_{OH}	Output HIGH Voltage		2.7–3.6	$V_{CC} - 0.2$		V	$I_{OH} = -100$ µA
			2.7	2.4		V	$I_{OH} = -8$ mA
			3.0	2.0		V	$I_{OH} = -32$ mA
V_{OL}	Output LOW Voltage		2.7		0.2	V	$I_{OL} = 100$ µA
			2.7		0.5	V	$I_{OL} = 24$ mA
			3.0		0.4	V	$I_{OL} = 16$ mA
			3.0		0.5	V	$I_{OL} = 32$ mA
			3.0		0.55	V	$I_{OL} = 64$ mA
$I_{I(HOLD)}$	Bushold Input Minimum Drive		3.0	75		µA	$V_I = 0.8V$
				−75		µA	$V_I = 2.0V$
$I_{I(OD)}$	Bushold Input Over-Drive Current to Change State		3.0	500		µA	(Note 6)
				−500		µA	(Note 7)
I_I	Input Current		3.6		10	µA	$V_I = 5.5V$
		Control Pins	3.6		±1	µA	$V_I = 0V$ or V_{CC}
		Data Pins	3.6		−5	µA	$V_I = 0V$
					1	µA	$V_I = V_{CC}$
I_{OFF}	Power Off Leakage Current		0		±100	µA	$0V \le V_I$ or $V_O \le 5.5V$
$I_{PU/PD}$	Power up/down 3-STATE Output Current		0–1.5V		±100	µA	$V_O = 0.5V$ to $3.0V$ V_I = GND or V_{CC}
I_{OZL}	3-STATE Output Leakage Current		3.6		−5	µA	$V_O = 0.0V$
I_{OZH}	3-STATE Output Leakage Current		3.6		5	µA	$V_O = 3.6V$
$I_{OZH}+$	3-STATE Output Leakage Current		3.6		10	µA	$V_{CC} < V_O \le 5.5V$
I_{CCH}	Power Supply Current		3.6		0.19	mA	Outputs HIGH
I_{CCL}	Power Supply Current		3.6		5	mA	Outputs LOW
I_{CCZ}	Power Supply Current		3.6		0.19	mA	Outputs Disabled
$I_{CCZ}+$	Power Supply Current		3.6		0.19	mA	$V_{CC} \le V_O \le 5.5V$, Outputs Disabled
ΔI_{CC}	Increase in Power Supply Current (Note 8)		3.6		0.2	mA	One Input at $V_{CC} - 0.6V$ Other Inputs at V_{CC} or GND

Note 6: An external driver must source at least the specified current to switch from LOW-to-HIGH.

Note 7: An external driver must sink at least the specified current to switch from HIGH-to-LOW.

Note 8: This is the increase in supply current for each input that is at the specified voltage level rather than V_{CC} or GND.

Dynamic Switching Characteristics (Note 9)

Symbol	Parameter	V_{CC} (V)	$T_A = 25°C$			Units	Conditions
			Min	Typ	Max		$C_L = 50$ pF, $R_L = 500\Omega$
V_{OLP}	Quiet Output Maximum Dynamic V_{OL}	3.3		0.8		V	(Note 10)
V_{OLV}	Quiet Output Minimum Dynamic V_{OL}	3.3		−0.8		V	(Note 10)

Note 9: Characterized in SSOP package. Guaranteed parameter, but not tested.

Note 10: Max number of outputs defined as (n). n−1 data inputs are driven 0V to 3V. Output under test held LOW.

AC Electrical Characteristics

Symbol	Parameter		$T_A = -40°C$ to $+85°C$, $C_L = 50$ pF, $R_L = 500\ \Omega$				Units
			$V_{CC} = 3.3 \pm 0.3V$		$V_{CC} = 2.7V$		
			Min	Max	Min	Max	
f_{MAX}	CLKAB or CLKBA to B or A		150		150		MHz
t_{PLH}	Propagation Delay		1.3	5.1	1.3	5.6	ns
t_{PHL}	Data to Outputs		1.3	4.7	1.3	5.3	
t_{PLH}	Propagation Delay		1.5	5.5	1.5	6.1	ns
t_{PHL}	LEBA or LEAB to B or A		1.5	5.1	1.5	5.7	
t_{PLH}	Propagation Delay		1.3	56	1.3	6.2	ns
t_{PHL}	CLKBA or CLKAB to B or A		1.3	5.1	1.3	5.7	
t_{PZH}	Output Enable Time		1.3	4.9	1.3	5.6	ns
t_{PZL}			1.3	5.4	1.3	6.2	
t_{PHZ}	Output Disable Time		1.7	5.9	1.7	6.6	ns
t_{PLZ}			1.7	5.8	1.7	6.3	
t_S	Setup Time	A before CLKAB	2.1		2.4		ns
		B before CLKBA	2.1		2.4		
		A or B before LE, CLK HIGH	2.4		1.6		
		A or B before LE, CLK LOW	2.4		1.6		
t_H	Hold Time	A or B after CLK	1.0		1.0		ns
		A or B after LE	1.7		1.7		
t_W	Pulse Width	LE HIGH	3.3		3.3		ns
		CLK HIGH or LOW	3.3		3.3		
t_{OSLH}	Output to Output Skew (Note 11)			1.0		1.0	ns
t_{OSHL}				1.0		1.0	

Note 11: Skew is defined as the absolute value of the difference between the actual propagation delay for any two separate outputs of the same device. The specification applies to any outputs switching in the same direction, either HIGH-to-LOW (t_{OSHL}) or LOW-to-HIGH (t_{OSLH}).

Capacitance (Note 12)

Symbol	Parameter	Conditions	Typical	Units
C_{IN}	Input Capacitance	$V_{CC} = 0V$, $V_I = 0V$ or V_{CC}	4	pF
$C_{I/O}$	Input/Output Capacitance	$V_{CC} = 3.0V$, $V_O = 0V$ or V_{CC}	8	pF

Note 12: Capacitance is measured at frequency f = 1 MHz, per MIL-STD-883, Method 3012.

Physical Dimensions inches (millimeters) unless otherwise noted

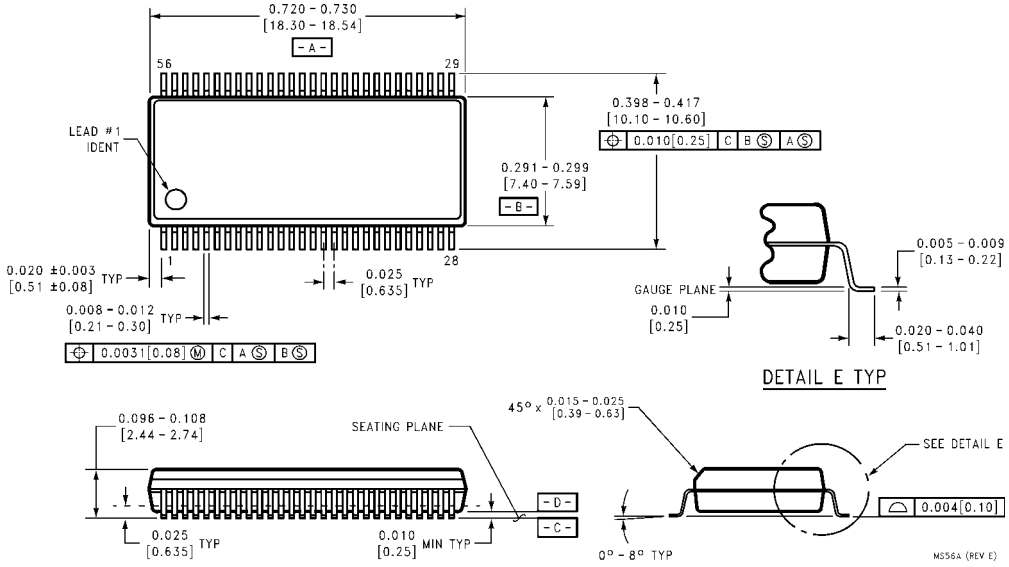

56-Lead Shrink Small Outline Package (SSOP), JEDEC MO-118, 0.300 Wide
Package Number MS56A

Physical Dimensions inches (millimeters) unless otherwise noted (Continued)

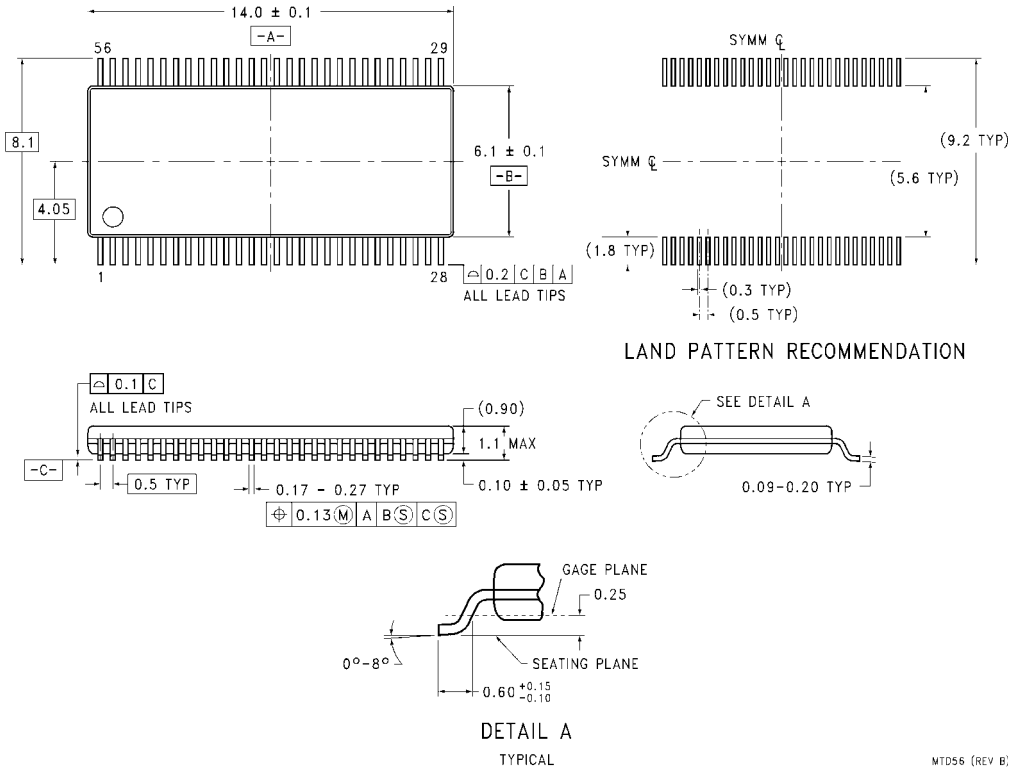

56-Lead Thin Shrink Small Outline Package (TSSOP), JEDEC MO-153, 6.1mm Wide
Package Number MTD56

Fairchild does not assume any responsibility for use of any circuitry described, no circuit patent licenses are implied and Fairchild reserves the right at any time without notice to change said circuitry and specifications.

LIFE SUPPORT POLICY

FAIRCHILD'S PRODUCTS ARE NOT AUTHORIZED FOR USE AS CRITICAL COMPONENTS IN LIFE SUPPORT DEVICES OR SYSTEMS WITHOUT THE EXPRESS WRITTEN APPROVAL OF THE PRESIDENT OF FAIRCHILD SEMICONDUCTOR CORPORATION. As used herein:

1. Life support devices or systems are devices or systems which, (a) are intended for surgical implant into the body, or (b) support or sustain life, and (c) whose failure to perform when properly used in accordance with instructions for use provided in the labeling, can be reasonably expected to result in a significant injury to the user.
2. A critical component in any component of a life support device or system whose failure to perform can be reasonably expected to cause the failure of the life support device or system, or to affect its safety or effectiveness.

www.fairchildsemi.com