SSTW003A0A Barracuda™ Series; DC-DC Converter Power Modules

36-75Vdc Input; 5.0Vdc, 3A, 15W Output



RoHS Compliant

Applications

- Wireless Networks
- Hybrid power architectures
- Optical and Access Network Equipment
- Enterprise Networks including Power over Ethernet (PoE)
- Industrial markets

Options

- Negative Remote On/Off logic
- Surface Mount/Tape and Reel (-SR Suffix)

Features

- Compliant to RoHS Directive 2011/65/EU and amended Directive (EU) 2015/863 (-Z versions)
- Compliant to REACH Directive (EC) No 1907/2006
- Ultra-wide Input Voltage Range, 36Vdc to 75Vdc
- No minimum load
- High efficiency – 87.0% at full load (Vin=48Vdc)
- Constant switching frequency
- Low output ripple and noise
- Small Size and low profile, follows industry standard 1x1 footprint
  27.9mm x 24.4mm x 8.5mm (MAX)
  (1.10 x 0.96 x 0.335 in)
- Surface mount (SMT) or Through hole (TH)
- Reflow process compliant, both SMT and TH versions
- Positive Remote On/Off logic
- Output overcurrent/voltage protection (hiccup)
- Over-temperature protection
- Output Voltage adjust: 90% to 110% of $V_{o,nom}$
- Wide operating temperature range (-40°C to 85°C)
- ANSI/UL* 62368-1 and CAN/CSA† C22.2 No. 62368-1 Recognized, DIN VDE‡ 0868-1/A11:2017 (EN62368-1:2014/A11:2017)
- CE mark meets 2014/35/EU directive§
- Meets the voltage and current requirements for ETSI 300-132-2 and complies with and licensed for Basic insulation
- 2250 Vdc Isolation tested in compliance with IEEE 802.3¤ PoE standards
- ISO** 9001 and ISO 14001 certified manufacturing facilities

Description

The SSTW003A0A Barracuda™ series power modules are isolated dc-dc converters that operate over an ultra-wide input voltage range of 36 Vdc -75Vdc and provide a single precisely regulated output voltage at 5.0Vdc. This series is a low cost, smaller size alternative to the existing LW/LAW/LC/SC/SW with enhanced performance parameters. The output is fully isolated from the input, allowing versatile polarity configurations and grounding connections. The modules exhibit high efficiency of 87.0% typical at full load. Built-in filtering for both input and output minimizes the need for external filtering. The module is fully self-protected with output over-current and over-voltage, over-temperature and input under voltage shutdown control. Optional features include negative or positive on/off logic and SMT connections.

* *UL* is a registered trademark of Underwriters Laboratories, Inc.
† *CSA* is a registered trademark of Canadian Standards Association.
‡ *VDE* is a trademark of Verband Deutscher Elektrotechniker e.V.
§ This product is intended for integration into end-user equipment . All of the required procedures of end-use equipment should be followed.
¤ IEEE and 802 are registered trademarks of the Institute of Electrical and Electronics Engineers, Incorporated.
** ISO is a registered trademark of the International Organization of Standards.

©2012 General Electric Company. All rights reserved.

SSTW003A0A Barracuda™ Series; DC-DC Converter Power Modules

36-75Vdc Input; 5.0Vdc, 3A, 15W Output

Absolute Maximum Ratings

Stresses in excess of the absolute maximum ratings can cause permanent damage to the device. These are absolute stress ratings only, functional operation of the device is not implied at these or any other conditions in excess of those given in the operations sections of the data sheet. Exposure to absolute maximum ratings for extended periods can adversely affect the device reliability.

Parameter	Device	Symbol	Min	Max	Unit
Input Voltage (Continuous)	All	V_{IN}	-0.3	80	Vdc
Transient (100ms)	All	$V_{IN, trans}$	-0.3	100	Vdc
Operating Ambient Temperature (see Thermal Considerations section)	All	T_A	-40	85	°C
Storage Temperature	All	T_{stg}	-55	125	°C
Altitude*	All			4000	m
I/O Isolation Voltage (100% factory Hi-Pot tested)	All	—	—	2250	Vdc

* For higher altitude applications, contact your GE Sales Representative for alternative conditions of use.

Electrical Specifications

Unless otherwise indicated, specifications apply over all operating input voltage, resistive load, and temperature conditions.

Parameter	Device	Symbol	Min	Typ	Max	Unit
Operating Input Voltage	All	V_{IN}	36	48	75	V_{dc}
Input No Load Current (V_{IN} = 48V_{dc}, (I_O = 0, module enabled)	All	$I_{IN,No\ load}$		30		mA
Input Stand-by Current (V_{IN} = 48V_{dc}, module disabled)	All	$I_{IN,stand\text{-}by}$		4	6	mA
Maximum Input Current (V_{IN}=36V_{dc}, I_O=$I_{O,\ max}$)	All	$I_{IN,max}$			.50	A_{dc}
Inrush Transient	All	I^2t			0.05	A^2s
Input Reflected Ripple Current, peak-to-peak (5Hz to 20MHz, 12µH source impedance; V_{IN}=0V to 75V_{dc}, I_O= I_{Omax}; see Test configuration section)	All			30		$mA_{p\text{-}p}$
Input Ripple Rejection (120Hz)	All			60		dB
EMC, EN55032		See EMC Considerations section				

CAUTION: This power module is not internally fused. An input line fuse must always be used.

This power module can be used in a wide variety of applications, ranging from simple standalone operation to being part of complex power architecture. To preserve maximum flexibility, internal fusing is not included; however, to achieve maximum safety and system protection, always use an input line fuse. The safety agencies require a fast-acting fuse with a maximum rating of 3 A (see Safety Considerations section). Based on the information provided in this data sheet on inrush energy and maximum dc input current, the same type of fuse with a lower rating can be used. Refer to the fuse manufacturer's data sheet for further information.

©2012 General Electric Company. All rights reserved.

SSTW003A0A Barracuda™ Series; DC-DC Converter Power Modules

36-75Vdc Input; 5.0Vdc, 3A, 15W Output

Electrical Specifications (continued)

Parameter	Device	Symbol	Min	Typ	Max	Unit
Output Voltage Set-point (V_{IN}=48V_{dc}, I_O=$I_{O,max}$, T_A=25°C)	5.0 V_O	$V_{O,set}$	4.93	5.00	5.07	V_{dc}
Output Voltage (Over all operating input voltage, resistive load, and temperature conditions until end of life)	All	V_O	-3.0	—	+3.0	% $V_{O,set}$
Adjustment Range Selected by external resistor	All	$V_{O,adj}$	-10		+10	% $V_{O,set}$
Output Regulation						
Line (V_{IN}=$V_{IN,min}$ to $V_{IN,max}$)	All		—	0.05	0.2	% $V_{O,set}$
Load (I_O=$I_{O,min}$ to $I_{O,max}$)	All		—	0.05	0.2	% $V_{O,set}$
Temperature (T_{ref}=$T_{A,min}$ to $T_{A,max}$)	All		—	—	1.0	% $V_{O,set}$
Output Ripple and Noise on nominal output Measured with 10uF Tantalum||1uF ceramic (V_{IN}=48V_{dc}, I_O=80%$I_{O,max}$, T_A=25°C)						
RMS (5Hz to 20MHz bandwidth)	All		—	—	25	mV_{rms}
Peak-to-Peak (5Hz to 20MHz bandwidth)			—	—	75	mV_{pk-pk}
External Capacitance	All	$C_{O,max}$	0	—	1000	µF
Output Current	All	I_o	0	—	3.0	A_{dc}
Output Current Limit Inception (Hiccup Mode)	All	$I_{O,lim}$	3.3	5.0	—	A_{dc}
Output Short-Circuit Current V_O ≤ 250 mV @ 25°C	All	$I_{O,s/c}$	—	—	0.8	A_{rms}
Efficiency V_{IN}=24-48V_{dc}, T_A=25°C, I_O=$I_{O,max}$	All	η	85.5	87.0	—	%
Switching Frequency (Fixed) V_{IN}=48V_{dc} and I_O= $I_{O,max}$	All	f_{sw}	—	350	—	kHz
Dynamic Load Response ($\Delta I_O/\Delta t$=0.1A/µs, V_{IN}=48V_{dc}, T_A=25°C) Load Change from I_O= 50% to 75% or 25% to 50% of $I_{O,max}$:						
Peak Deviation	All	V_{pk}	—	3.0	—	% $V_{O,set}$
Settling Time (Vo<10% peak deviation)	All	t_s	—	800	—	µs

Isolation Specifications

Parameter	Symbol	Min	Typ	Max	Unit
Isolation Capacitance	C_{iso}	—	1000	—	pF
Isolation Resistance	R_{iso}	10	—	—	MΩ
I/O Isolation Voltage	All	—	—	2250	Vdc

General Specifications

Parameter		Min	Typ	Max	Unit
Calculated Reliability based upon Telcordia SR-332 Issue 2: Method I Case 3 (V_{IN}=48V_{dc}, I_O=80%x$I_{O,max}$, T_A=40°C, airflow = 200 LFM, 90% confidence)	FIT		144.7		10^9/Hours
	MTBF		6,912,487		Hours
Weight		—	8.0 (0.28)	—	g (oz.)

©2012 General Electric Company. All rights reserved.

SSTW003A0A Barracuda™ Series; DC-DC Converter Power Modules

36-75Vdc Input; 5.0Vdc, 3A, 15W Output

Feature Specifications

Unless otherwise indicated, specifications apply over all operating input voltage, resistive load, and temperature conditions. See Feature Descriptions for additional information.

Parameter	Device	Symbol	Min	Typ	Max	Unit
Remote On/Off Signal Interface (V_{IN}=$V_{IN, min}$ to $V_{IN, max}$; open collector or equivalent, Signal referenced to V_{IN-} terminal) Negative Logic: device code suffix "1" Logic Low = module On, Logic High = module Off Positive Logic: No device code suffix required Logic Low = module Off, Logic High = module On						
Logic Low - Remote On/Off Current ($V_{on/off}$ = -0.7V_{dc})	All	$I_{on/off}$	—	—	0.15	mA
Logic Low - On/Off Voltage	All	$V_{on/off}$	-0.7	—	0.8	V_{dc}
Logic High Voltage ($I_{on/off}$ = 0A_{dc})	All	$V_{on/off}$	2.0	—	18	V_{dc}
Logic High maximum allowable leakage current	All	$I_{on/off}$	—	—	25	µA
Turn-On Delay and Rise Times (I_O=80% of $I_{O, max}$, T_A=25°C)						
Case 1: Input power is applied for at least 1second, and then the On/Off input is set from OFF to ON (T_{delay} = on/off pin transition until V_O = 10% of $V_{O, set}$)	All	$T_{delay\ Case1}$	—	10	20	ms
Case 2: On/Off input is set to Module ON, and then input power is applied (T_{delay} = V_{IN} reaches $V_{IN, min}$ until V_O = 10% of $V_{O,set}$)	All	$T_{delay\ Case2}$	—	10	20	ms
Output voltage Rise time (time for V_o to rise from 10% of $V_{o,set}$ to 90% of $V_{o, set}$)	All	T_{rise}	—	10	20	ms
Output Voltage Overshoot (I_O=80% of $I_{O, max}$, V_{IN}= 48V_{dc}, T_A=25°C)					3	% $V_{O, set}$
Output Overvoltage Protection	All	$V_{O, limit}$	5.9		7.2	V_{dc}
Input Undervoltage Lockout						
Turn-on Threshold	All	$V_{uv/on}$	—	34	36	V_{dc}
Turn-off Threshold	All	$V_{uv/off}$	30	32	—	V_{dc}
Hysterisis	All	V_{hyst}	—	2.0	—	V_{dc}

©2012 General Electric Company. All rights reserved.

SSTW003A0A Barracuda™ Series; DC-DC Converter Power Modules

36-75Vdc Input; 5.0Vdc, 3A, 15W Output

Characteristic Curves

The following figures provide typical characteristics for the SSTW003A0A (5.0V, 3.0A) at 25°C. The figures are identical for either positive or negative remote On/Off logic.

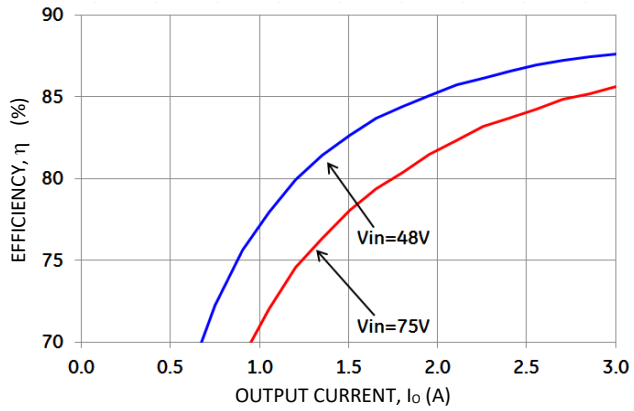

Figure 1. Converter Efficiency versus Output Current.

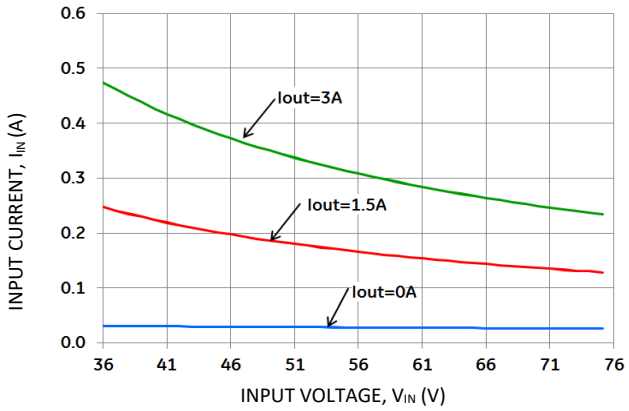

Figure 2. Converter Input Current versus Input Voltage.

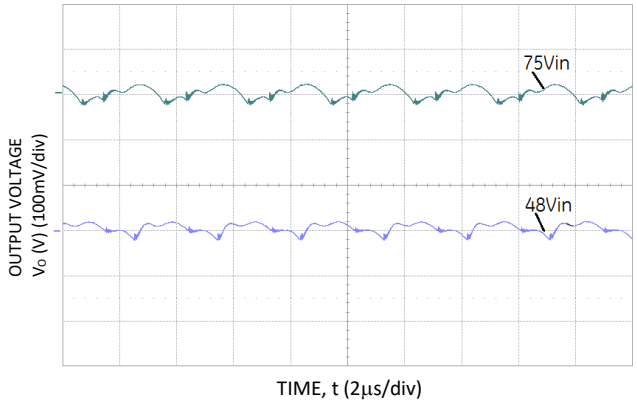

Figure 3. Typical output ripple and noise ($I_o = I_{o,max}$).

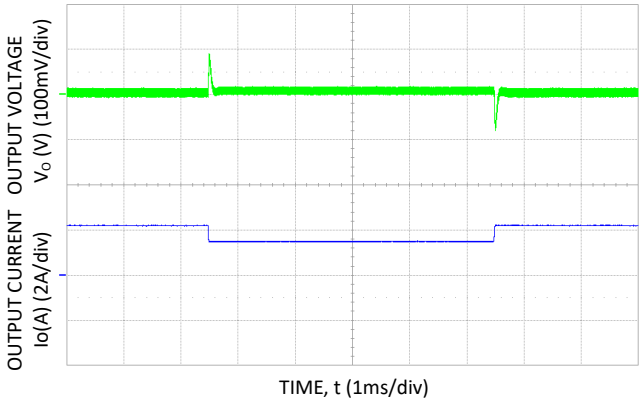

Figure 4. Transient Response to 0.1A/µS Dynamic Load Change from 50% to 75% to 50% of full load, Vin=48V.

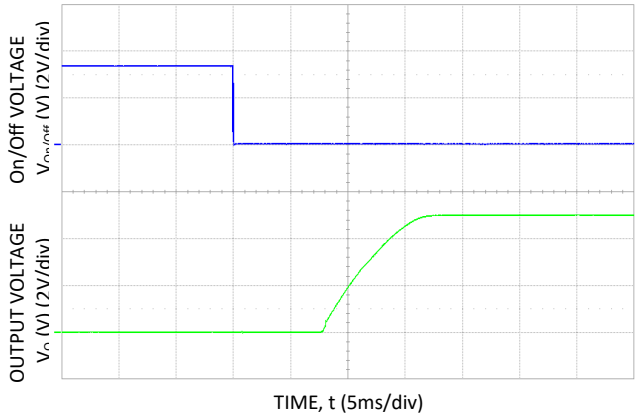

Figure 5.Typical Start-up Using Remote On/Off, negative logic version shown (V_{IN} = 48V, Io = $I_{o,max}$).

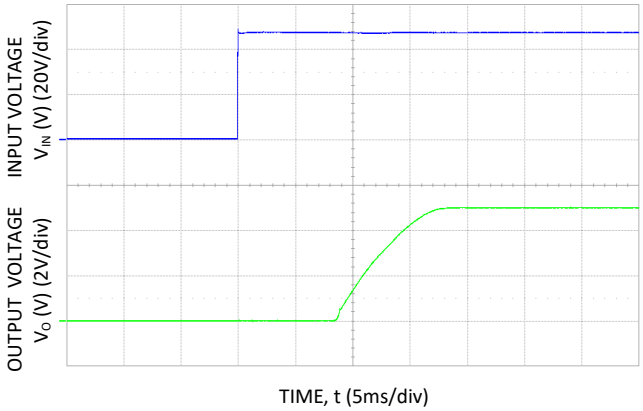

Figure 6. Typical Start-up Using Input Voltage (V_{IN} = 48V, I_o = $I_{o,max}$).

©2012 General Electric Company. All rights reserved.

SSTW003A0A Barracuda™ Series; DC-DC Converter Power Modules

36-75Vdc Input; 5.0Vdc, 3A, 15W Output

Test Configurations

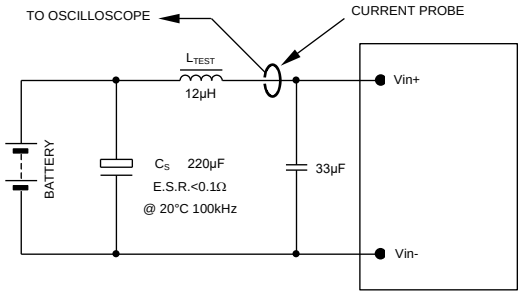

NOTE: Measure input reflected ripple current with a simulated source inductance (L_{TEST}) of 12µH. Capacitor C_S offsets possible battery impedance. Measure current as shown above.

Figure 7. Input Reflected Ripple Current Test Setup.

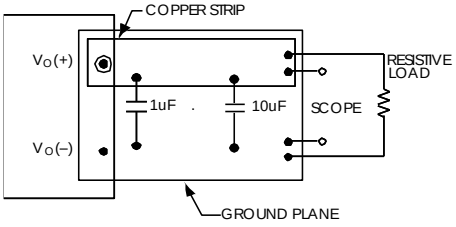

NOTE: All voltage measurements to be taken at the module terminals, as shown above. If sockets are used then Kelvin connections are required at the module terminals to avoid measurement errors due to socket contact resistance.

Figure 8. Output Ripple and Noise Test Setup.

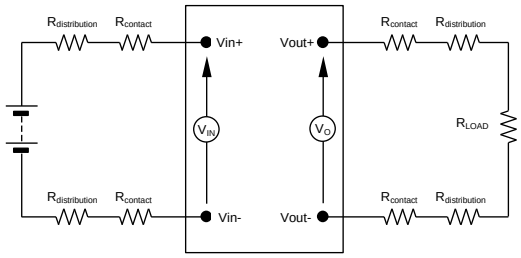

NOTE: All voltage measurements to be taken at the module terminals, as shown above. If sockets are used then Kelvin connections are required at the module terminals to avoid measurement errors due to socket contact resistance.

Figure 9. Output Voltage and Efficiency Test Setup.

$$\text{Efficiency} \quad \eta = \frac{V_O . I_O}{V_{IN} . I_{IN}} \times 100 \ \%$$

Design Considerations

Input Source Impedance

The power module should be connected to a low ac-impedance source. Highly inductive source impedance can affect the stability of the power module. For the test configuration in Figure 7, a 33µF electrolytic capacitor (ESR<0.7Ω at 100kHz), mounted close to the power module helps ensure the stability of the unit. Consult the factory for further application guidelines.

Safety Considerations

For safety agency approval the power module must be installed in compliance with the spacing and separation requirements of the end-use safety agency standards, i.e., UL ANSI/UL 62368-1 and CAN/CSA C22.2 No. 62368-1 Recognized, DIN VDE 0868-1/A11:2017 (EN62368-1:2014/A11:2017)

If the input source is non-SELV (ELV or a hazardous voltage greater than 60 Vdc and less than or equal to 75Vdc), for the module's output to be considered as meeting the requirements for safety extra-low voltage (SELV) or ES1, all of the following must be true:

- The input source is to be provided with reinforced insulation from any other hazardous voltages, including the ac mains.
- One V_{IN} pin and one V_{OUT} pin are to be grounded, or both the input and output pins are to be kept floating.
- The input pins of the module are not operator accessible.
- Another SELV or ES1 reliability test is conducted on the whole system (combination of supply source and subject module), as required by the safety agencies, to verify that under a single fault, hazardous voltages do not appear at the module's output.

Note: Do not ground either of the input pins of the module without grounding one of the output pins. This may allow a non-SELV/ES1 voltage to appear between the output pins and ground.

The power module has safety extra-low voltage (SELV) or ES1 outputs when all inputs are SELV or ES1.

For input voltages exceeding –60 Vdc but less than or equal to –75 Vdc, these converters have been evaluated to the applicable requirements of BASIC INSULATION between secondary DC MAINS DISTRIBUTION input (classified as TNV-2 in Europe) and unearthed SELV outputs.

The input to these units is to be provided with a maximum 3A time-delay fuse in the ungrounded lead.

©2012 General Electric Company. All rights reserved.

SSTW003A0A Barracuda™ Series; DC-DC Converter Power Modules

36-75Vdc Input; 5.0Vdc, 3A, 15W Output

Feature Description

Remote On/Off

Two remote on/off options are available. Positive logic turns the module on during a logic high voltage on the on/off pin, and off during a logic low. Negative logic remote on/off, device code suffix "1", turns the module off during a logic high and on during a logic low.

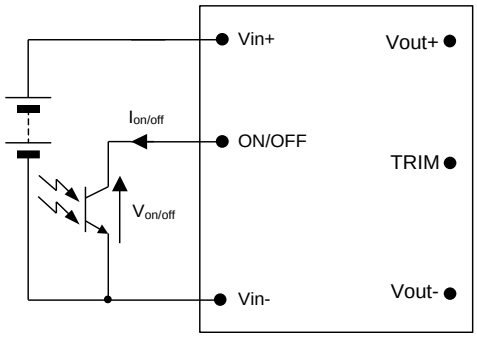

Figure 10. Circuit configuration for using Remote On/Off Implementation.

To turn the power module on and off, the user must supply a switch (open collector or equivalent) to control the voltage ($V_{on/off}$) between the ON/OFF terminal and the V_{IN}(-) terminal. Logic low is 0V ≤ $V_{on/off}$ ≤ 0.8V. The maximum $I_{on/off}$ during a logic low is 1mA, the switch should be maintain a logic low level whilst sinking this current.

During a logic high, the typical $V_{on/off}$ generated by the module is 2.4V, and the maximum allowable leakage current at $V_{on/off}$ = 2.4V is 25µA.

If not using the remote on/off feature:

For positive logic, leave the ON/OFF pin open.

For negative logic, short the ON/OFF pin to V_{IN}(-).

Overcurrent Protection

To provide protection in a fault (output overload) condition, the unit is equipped with internal current-limiting circuitry and can endure current limiting continuously. At the point of current-limit inception, the unit enters hiccup mode. The unit operates normally once the output current is brought back into its specified range. The average output current during hiccup is 10% $I_{O, max}$.

Overtemperature Protection

To provide protection under certain fault conditions, the unit is equipped with a thermal shutdown circuit. The unit will shutdown if the thermal reference point Tref (Figure 16), exceeds 125°C (typical), but the thermal shutdown is not intended as a guarantee that the unit will survive temperatures beyond its rating. The module will automatically restart upon cool-down to a safe temperature.

Input Undervoltage Lockout

At input voltages below the input undervoltage lockout limit, the module operation is disabled. The module will only begin to operate once the input voltage is raised above the undervoltage lockout turn-on threshold, $V_{UV/ON}$. Once operating, the module will continue to operate until the input voltage is taken below the undervoltage turn-off threshold, $V_{UV/OFF}$.

Over Voltage Protection

The output overvoltage protection consists of circuitry that independently monitors the output voltage, and shuts the module down if the output voltage exceeds specified limits. The module shall contain hiccup restart capability.

Output Voltage Programming

Trimming allows the user to increase or decrease the output voltage set point of the module. This is accomplished by connecting an external resistor between the TRIM pin and either the Vout+ pin or the Vout- pin.

Trim Down – Decrease Output Voltage

By connecting an external resistor between the TRIM pin and Vout+ pin (Radj-down), the output voltage set point decreases (see figure 11). The following equation determines the external resistor value to obtain an output voltage change from $V_{o,nom}$ to the desired $V_{o,adj}$:

$$R_{adj-down} = \left[\frac{(V_{o,adj} - 2.5) \times G}{(V_{o,nom} - V_{o,adj})} - H \right] \Omega$$

Note: Values for G and H are defined in Table 1.

Module	G	H	K
SSTW003A0A	5110	2050	2.5

Table 1. Trim Constants SSTW series

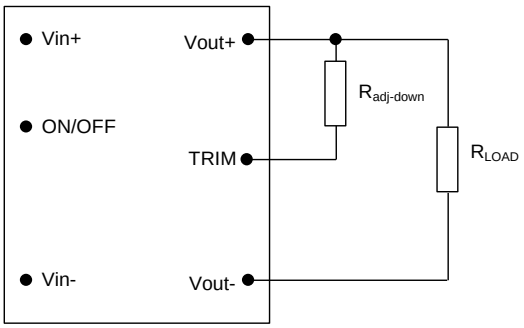

Figure 11. Circuit Configuration to Decrease Output Voltage.

Trim Up – Increase Output Voltage

By connecting an external resistor between the TRIM pin and Vout- pin (Radj-up), the output voltage set point increases (see figure 12). The following equation determines the external resistor value to obtain an output voltage change from $V_{o,nom}$ to the desired $V_{o,adj}$:

$$R_{adj-up} = \left[\frac{G \times 2.5}{(V_{o,adj} - 2.5 - K)} - H \right] \Omega$$

Note: Values for G, H and K are defined in Table 1.

©2012 General Electric Company. All rights reserved.

The combination of the output voltage adjustment and the output voltage initial tolerance must not exceed the allowable trim range of 90% to 110% of the nominal output voltage as measured between the Vout+ and Vout- pins.

Feature Descriptions (continued)

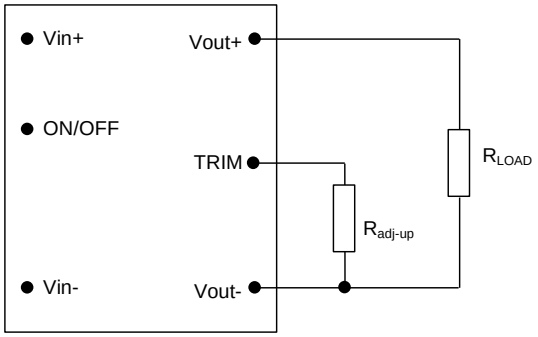

Figure 12. Circuit Configuration to Increase Output Voltage.

The SSTW power modules have a fixed current-limit set point. Therefore, as the output voltage is adjusted down, the available output power is reduced.

Trim Examples

For SSTW003A0A, nominal 5.0V module. To trim module down to 4.90V:

$$R_{adj-down} = \left[\frac{(4.9-2.5)\times 5110}{(5.0-4.9)} - 2050\right]\Omega$$

$$R_{adj-down} = 120{,}590\Omega$$

Thermal Considerations

The power modules operate in a variety of thermal environments; however, sufficient cooling should be provided to help ensure reliable operation.

Considerations include ambient temperature, airflow, module power dissipation, and the need for increased reliability. A reduction in the operating temperature of the module will result in an increase in reliability.

The thermal data presented here is based on physical measurements taken in a wind tunnel, using automated thermo-couple instrumentation to monitor key component temperatures: FETs, diodes, control ICs, magnetic cores, ceramic capacitors, opto-isolators, and module pwb conductors, while controlling the ambient airflow rate and temperature. For a given airflow and ambient temperature, the module output power is increased, until one (or more) of the components reaches its maximum derated operating temperature, as defined in IPC-9592A. This procedure is then repeated for a different airflow or ambient temperature until a family of module output derating curves is obtained.

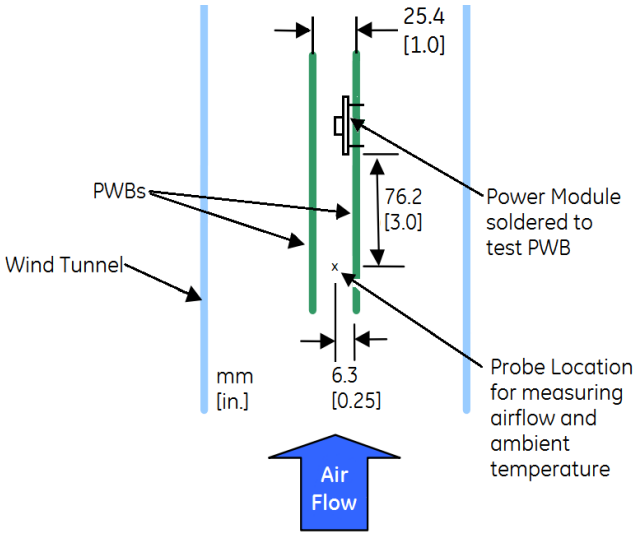

Figure 13. Thermal Test Setup .

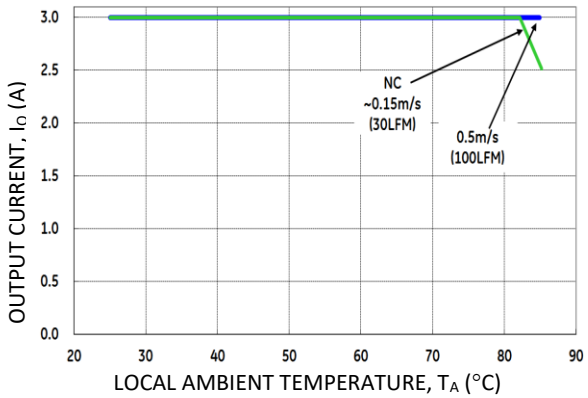

Figure 14. Output Current Derating for the Open Frame SSTW003A0A in the Transverse Orientation; Airflow Direction from Vin(-) to Vin(+); Vin = 48V.

The thermal reference point, T_{ref} used in the specifications is shown in Figure 15. For reliable operation this temperature should not exceed 111°C.

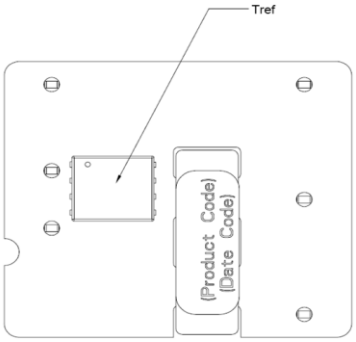

Figure 15. T_{ref} Temperature Measurement Location.

Heat Transfer via Convection

Increased airflow over the module enhances the heat transfer via convection. Derating figures showing the maximum output

©2012 General Electric Company. All rights reserved.

current that can be delivered by each module versus local ambient temperature (T_A) for natural convection and up to 3m/s (600 ft./min) are shown in the respective Characteristics Curves section.

Please refer to the Application Note "Thermal Characterization Process For Open-Frame Board-Mounted Power Modules" for a detailed discussion of thermal aspects including maximum device temperatures.

EMC Requirements

Figure 16 shows a maximum filter configuration to meet the conducted emission limits of EN55032 Class B.

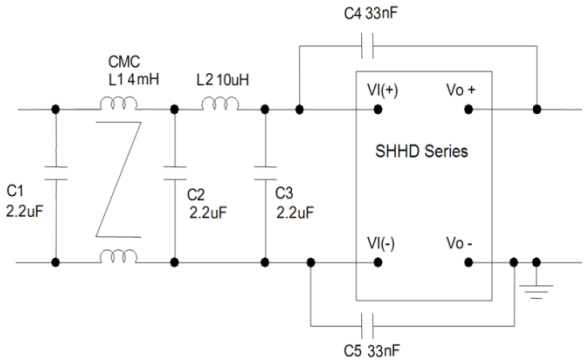

Ref Des	Filter
C1 , C2, C3	2.2uF/100V
C4, C5	33nF Y cap
L1	4mH CM choke
L2	10uH inductor

Figure 16. Suggested Configuration for EN55032 Class B.

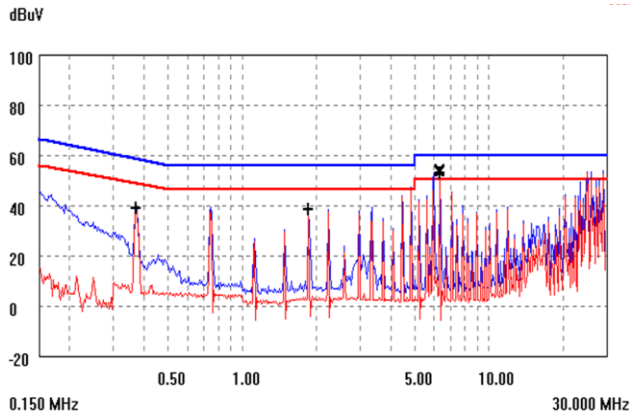

Figure 17. EMC signature using above filter.

For further information on designing for EMC compliance, please refer to the FLTR100V10 data sheet (FDS01-043EPS).

Layout Considerations

The SSTW power module series are low profile in order to be used in fine pitch system card architectures. As such, component clearance between the bottom of the power module and the mounting board is limited. Avoid placing copper areas on the outer layer directly underneath the power module. Also avoid placing via interconnects underneath the power module.

For additional layout guide-lines, refer to the FLTR100V10 data sheet.

The SSTW family of power modules is available for either Through-Hole (TH) or Surface Mount (SMT) soldering.

Through-Hole Soldering Information

The RoHS-compliant (Z codes) through-hole products use the SAC (Sn/Ag/Cu) Pb-free solder and RoHS-compliant components. They are designed to be processed through single or dual wave soldering machines. The pins have an RoHS-compliant finish that is compatible with both Pb and Pb-free wave soldering processes. A maximum preheat rate of 3°C/s is suggested. The wave preheat process should be such that the temperature of the power module board is kept below 210°C. For Pb solder, the recommended pot temperature is 260°C, while the Pb-free solder pot is 270°C max. The Through Hole module is also compatible with paste-in-hole reflow soldering. Refer to the Reflow Soldering Information section for process details. If additional information is needed, please consult with your GE representative for more details.

Surface Mount Information

Pick and Place

The SSTW-SR series of DC-to-DC power converters use an open-frame construction and are designed for surface mount assembly within a fully automated manufacturing process.

The SSTW-SR series modules are designed to use the main magnetic component surface to allow for pick and place.

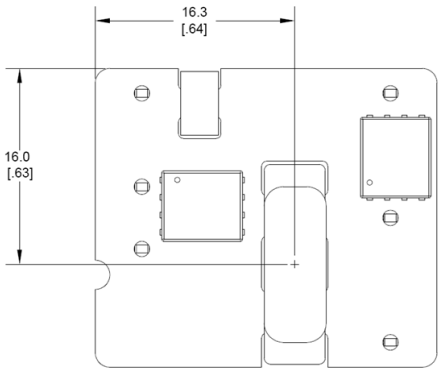

Note: All dimensions in mm [in].

Figure 18. Pick and Place Location.

Z Plane Height

The 'Z' plane height of the pick and place location is 7.50mm nominal with an RSS tolerance of +/-0.25 mm.

Nozzle Recommendations

The module weight has been kept to a minimum by using open frame construction. Even so, they have a relatively large mass when compared with conventional SMT components. Variables such as nozzle size, tip style, vacuum pressure and placement speed should be considered to optimize this process.

©2012 General Electric Company. All rights reserved.

The minimum recommended nozzle diameter for reliable operation is 5mm. The maximum nozzle outer diameter, which will safely fit within the allowable component spacing, is 6.5mm.

Oblong or oval nozzles up to 11 x 6 mm may also be used within the space available.

For further information please contact your local GE Technical Sales Representative.

Reflow Soldering Information

These power modules are large mass, low thermal resistance devices and typically heat up slower than other SMT components. It is recommended that the customer review data sheets in order to customize the solder reflow profile for each application board assembly.

The following instructions must be observed when SMT soldering these units. Failure to observe these instructions may result in the failure of or cause damage to the modules, and can adversely affect long-term reliability.

There are several types of SMT reflow technologies currently used in the industry. These surface mount power modules can be reliably soldered using natural forced convection, IR (radiant infrared), or a combination of convection/IR. The recommended linear reflow profile using Sn/Pb solder is shown in Figure 20 and 21. For reliable soldering the solder reflow profile should be established by accurately measuring the modules CP connector temperatures.

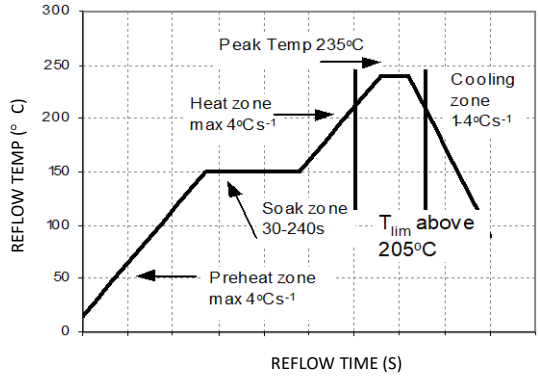

Figure 19. Recommended Reflow Profile for Sn/Pb solder.

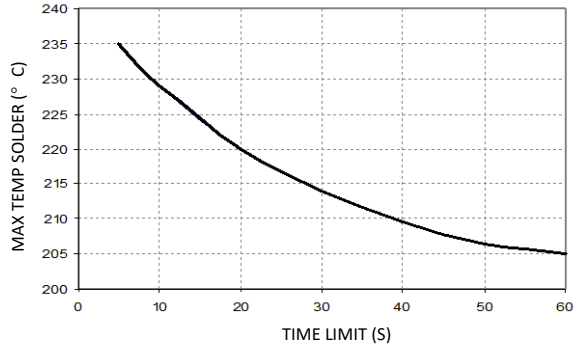

Figure 20. Time Limit, T_{lim}, Curve Above 205°C Reflow .

Lead Free Soldering

The –Z version SMT modules of the SSTW series are lead-free (Pb-free) and RoHS compliant and are compatible in a Pb-free soldering process. Failure to observe the instructions below may result in the failure of or cause damage to the modules and can adversely affect long-term reliability.

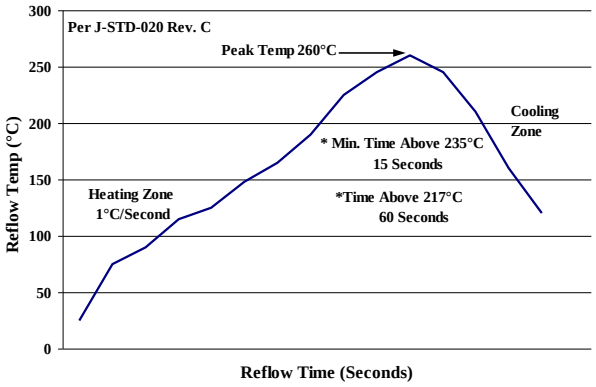

Figure 21. Recommended linear reflow profile using Sn/Ag/Cu solder.

MSL Rating

The SSTW001A3B series SMT modules have a MSL rating of 2a.

©2012 General Electric Company. All rights reserved.

SSTW003A0A Barracuda™ Series; DC-DC Converter Power Modules

36-75Vdc Input; 5.0Vdc, 3A, 15W Output

Surface Mount Information (continued)

Pb-free Reflow Profile

Power Systems will comply with J-STD-020 Rev. C (Moisture/Reflow Sensitivity Classification for Nonhermetic Solid State Surface Mount Devices) for both Pb-free solder profiles and MSL classification procedures. This standard provides a recommended forced-air-convection reflow profile based on the volume and thickness of the package (table 4-2). The suggested Pb-free solder paste is Sn/Ag/Cu (SAC). The recommended linear reflow profile using Sn/Ag/Cu solder is shown in Figure 22.

Post Solder Cleaning and Drying Considerations

Post solder cleaning is usually the final circuit board assembly process prior to electrical board testing. The result of inadequate cleaning and drying can affect both the reliability of a power module and the testability of the finished circuit board assembly. For guidance on appropriate soldering, cleaning and drying procedures, refer to Lineage Power *Board Mounted Power Modules: Soldering and Cleaning* Application Note (AN04-001).

Layout Recommendations

Dimensions are in millimeters and [inches].
Tolerances: x.x mm ± 0.5 mm [x.xx in. ± 0.02 in.] (unless otherwise indicated)
x.xx mm ± 0.25 mm [x.xxx in ± 0.010 in.]

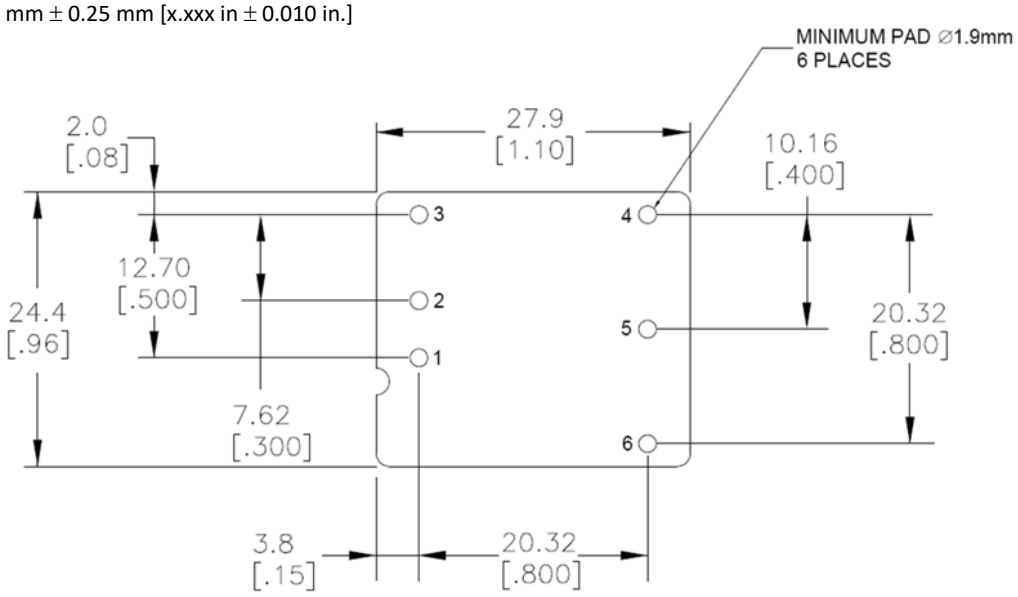

SMT Layout

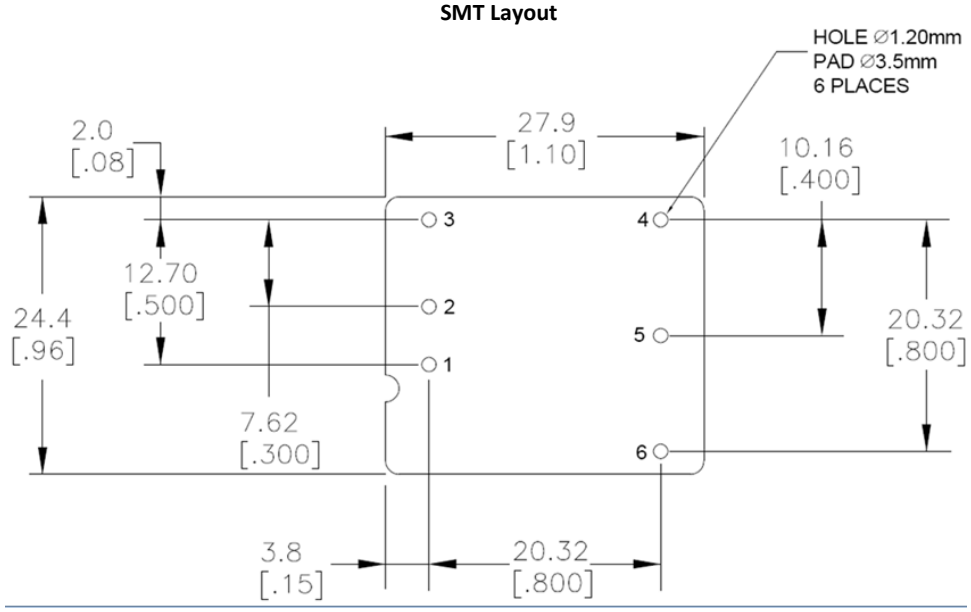

Through Hole Layout

©2012 General Electric Company. All rights reserved.

SSTW003A0A Barracuda™ Series; DC-DC Converter Power Modules

36-75Vdc Input; 5.0Vdc, 3A, 15W Output

Packaging Details

The SSTW003A0A-SR series SMT versions are supplied in tape & reel as standard. Details of tape dimensions are shown below. Modules are shipped in quantities of 150 modules per reel.

Tape Dimensions

Dimensions are in millimeters and [inches].

Tolerances: x.x mm ± 0.5 mm [x.xx in. ± 0.02 in.] (unless otherwise indicated)

x.xx mm ± 0.25 mm [x.xxx in ± 0.010 in.]

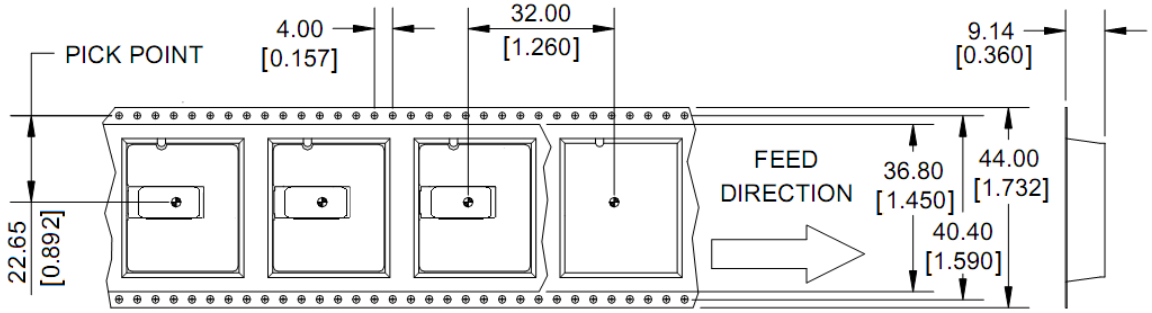

Reel Dimensions

Outside Diameter: 330.2 mm [13.00”]

Inside Diameter: 177.8 mm [7.00”]

Tape Width: 44.00 [1.732]

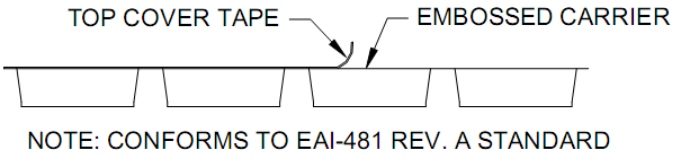

NOTE: CONFORMS TO EAI-481 REV. A STANDARD

The SSTW003A0A series Through Hole versions are supplied in trays as standard. Details of tray dimensions are shown below. Modules are shipped in quantities of 75 modules per box.

Tray Dimensions

Dimensions are in millimeters.

Tolerances: x.x mm ± 0.5 mm (unless otherwise indicated)

x.xx mm ± 0.25 mm

©2012 General Electric Company. All rights reserved.

SSTW003A0A Barracuda™ Series; DC-DC Converter Power Modules

36-75Vdc Input; 5.0Vdc, 3A, 15W Output



Material	PET (1mm)
Max surface resistivity	10^{9} -$10^{11}\Omega$/PET
Color	Clear
Capacity	25power modules
Min order quantity	75pcs (1 box of 3 full trays + 1 empty top tray)

Mechanical Outline for SSTW003A0A Surface-Mount Module

Dimensions are in millimeters and [inches].
Tolerances: x.x mm ± 0.5 mm [x.xx in. ± 0.02 in.] (unless otherwise indicated)
x.xx mm ± 0.25 mm [x.xxx in ± 0.010 in.]

©2012 General Electric Company. All rights reserved.

SSTW003A0A Barracuda™ Series; DC-DC Converter Power Modules

36-75Vdc Input; 5.0Vdc, 3A, 15W Output

Top View

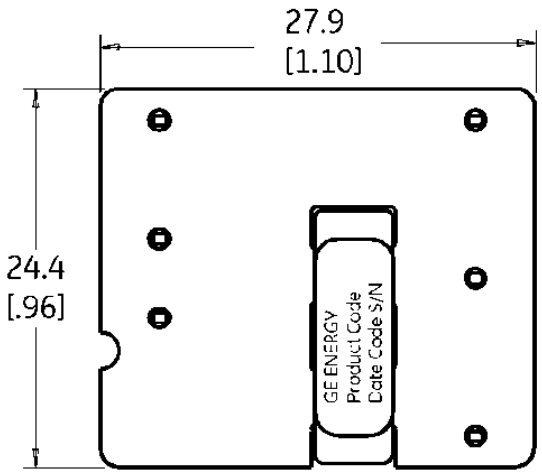

Side View

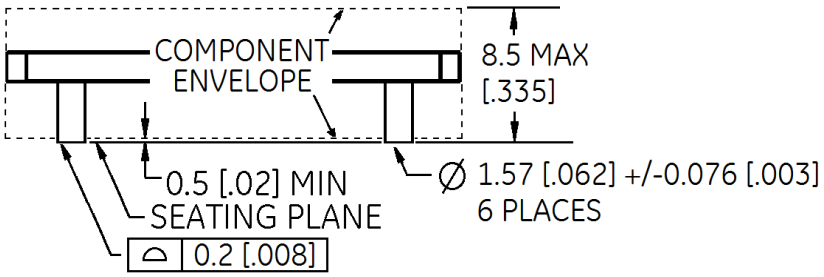

Bottom View

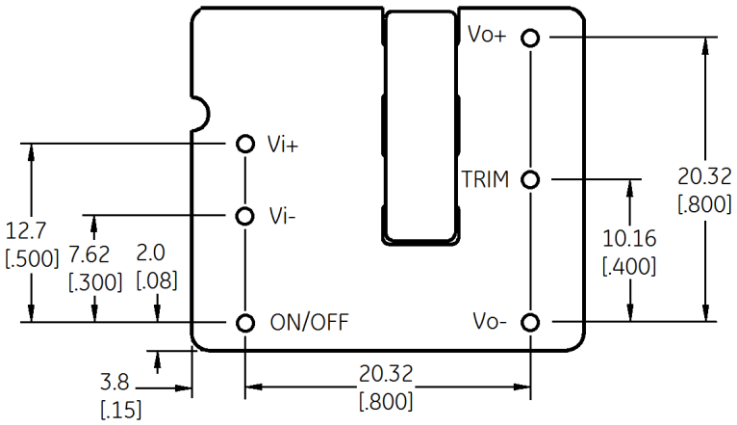

Pin	Function
1	Vin +
2	Vin -
3	ON/OFF
4	Vout -
5	TRIM
6	Vout +

Mechanical Outline for SSTW003A0A Through Hole Module

Dimensions are in millimeters and [inches].
Tolerances: x.x mm ± 0.5 mm [x.xx in. ± 0.02 in.] (unless otherwise indicated)

©2012 General Electric Company. All rights reserved.

SSTW003A0A Barracuda™ Series; DC-DC Converter Power Modules

36-75Vdc Input; 5.0Vdc, 3A, 15W Output

x.xx mm ± 0.25 mm [x.xxx in ± 0.010 in.]

Top View

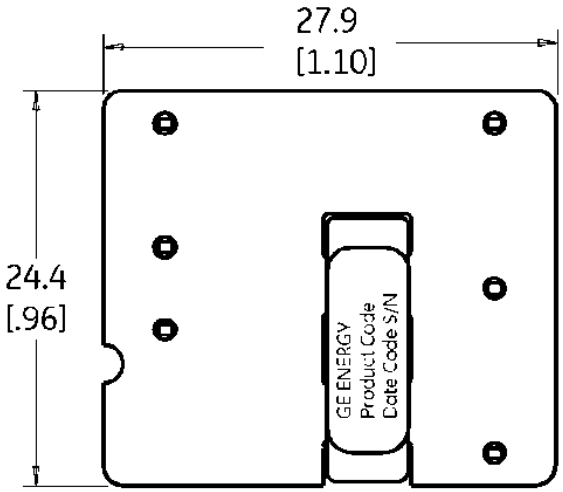

Side View

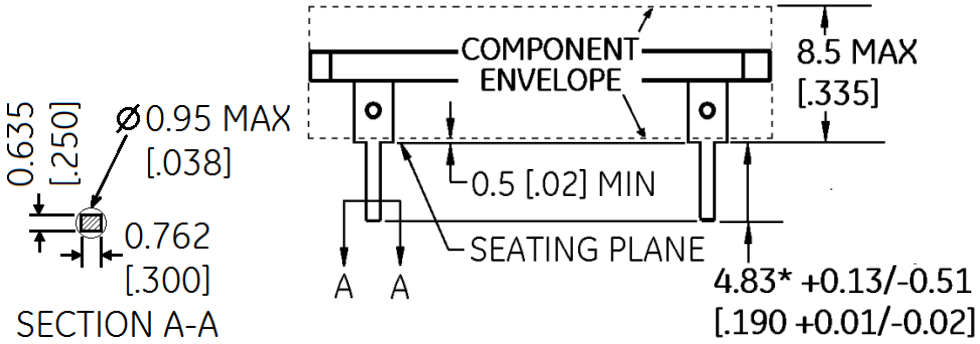

Bottom View

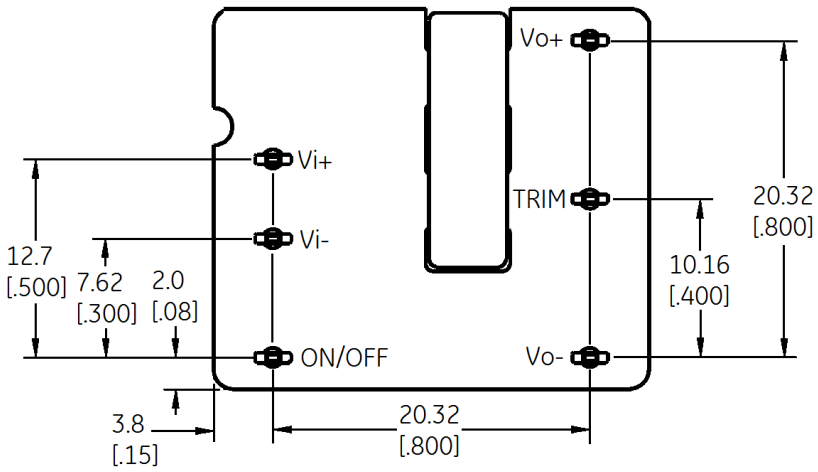

Pin	Function
1	Vin +
2	Vin -
3	ON/OFF
4	Vout -
5	TRIM
6	Vout +

©2012 General Electric Company. All rights reserved.

GE Energy

Preliminary Data Sheet

SSTW003A0A Barracuda™ Series; DC-DC Converter Power Modules

36-75Vdc Input; 3.3Vdc, 5A, 15W Output

Ordering Information

Please contact your GE Sales Representative for pricing, availability and optional features.

Device Codes

Device Code	Input Voltage Range	Output Current	Output Voltage	Remote On/Off Logic	Connector Type	Comcode
SSTW003A0A41Z	48V (36-75Vdc)	3.0A	5.0V	Negative	Through hole	150030879
SSTW003A0A41-SRZ	48V (36-75Vdc)	3.0A	5.0V	Negative	Surface mount	150030878

Device Options

	Characteristic	Character and Position	Definition
Ratings	Form Factor	S	**S** = 1 x 1 Brick
	Family Designator	ST	**ST** = Low Power Barracuda Series
	Input Voltage	W	**W** = Wide Range, 36V-75V
	Output Current	003A0	**003A0** = 003.0 Amps Maximum Output Current
	Output Voltage	A	**A** = 5.0V nominal
Options	Pin Length	6	Omit = Default Pin Length shown in Mechanical Outline Figures **6** = Pin Length: 3.68 mm ± 0.25mm , (0.145 in. ± 0.010 in.) **8** = Pin Length: 2.79 mm ± 0.25mm , (0.110 in. ± 0.010 in.)
		8	
	Action following Protective Shutdown	4	**4** = Auto-restart following shutdown (Overcurrent/Overvoltage) Must be ordered
	On/Off Logic	1	Omit = Positive Logic **1** = Negative Logic
		–	
	Customer Specific	XY	**XY** = Customer Specific Modified Code, Omit for Standard Code
	Mechanical Features		Omit = Standard open Frame Module
		SR	**S** = Surface Mount connections: **R** = Tape & Reel Packaging
	RoHS		Omit = RoHS 5/6, Lead Based Solder Used
		Z	**Z** = RoHS 6/6 Compliant, Lead free

Contact Us

For more information, call us at

USA/Canada:

+1 888 546 3243, or +1 972 244 9288

Asia-Pacific:

+86-21-53899666

Europe, Middle-East and Africa:

+49.89.878067-280

Go.ABB/Industrial

imagination at work

GE Critical Power reserves the right to make changes to the product(s) or information contained herein without notice, and no liability is assumed as a result of their use or application. No rights under any patent accompany the sale of any such product(s) or information.

©2016 General Electric Company. All International rights reserved.