JRCW016A0R Orca* Series; DC-DC Converter Power Modules

36–75 Vdc Input; 28Vdc Output; 16Adc Output

RoHS Compliant



Applications

- RF Power Amplifier
- Wireless Networks
- Switching Networks

Options

- Output OCP/OVP auto restart
- Shorter pins
- Unthreaded heatsink holes
- Tunable Loop* for transient response optimization

Features

- Compliant to RoHS Directive 2011/65/EU and amended Directive (EU) 2015/863 (-Z versions)
- Compliant to REACH Directive (EC) No 1907/2006
- High power density: 166 W/in^3
- Very high efficiency: >93.5% Typ at Full Load
- Industry standard half-brick pin-out
- Low output ripple and noise
- Industry standard, DOSA compliant half-brick footprint 57.7mm x 60.7mm x 12.7mm (2.27” x 2.39” x 0.5”)
- Remote Sense
- 2:1 input voltage range
- Single tightly regulated output
- Constant switching frequency
- Constant Current Overcurrent limit
- Latch after short circuit fault shutdown
- Over temperature protection auto restart
- Output voltage adjustment trim, 14.0V$_{dc}$ to 35.2V$_{dc}$
- Wide operating case temperature range (-40°C to 100°C)
- CE mark meets 2014/35/EU directives§
- ANSI/UL* 62368-1 and CAN/CSA† C22.2 No. 62368-1 Recognized, DIN VDE‡ 0868-1/A11:2017 (EN62368-1:2014/A11:2017)
- ISO** 9001 and ISO 14001 certified manufacturing facilities
- Compliant to IPC-9592A, Category 2, Class II

Description

The JRCW016A0R Orca series of dc-dc converters are a new generation of isolated, very high efficiency DC/DC power modules providing up to up to 16Adc output current at a nominal output voltage of 28Vdc in an industry standard, DOSA compliant half-brick size footprint, which makes it an ideal choice for high voltage and high power applications. Threaded-through holes are provided to allow easy mounting or addition of a heatsink for high-temperature applications. The output is fully isolated from the input, allowing versatile polarity configurations and grounding connections. This module contains an optional new feature, the Tunable Loop, that allows the user to optimize the dynamic response of the converter to match the load with reduced amount of output capacitance, leading to savings on cost and PWB area.

* Trademark of General Electric Company
# *UL* is a registered trademark of Underwriters Laboratories, Inc.
† *CSA* is a registered trademark of Canadian Standards Association.
‡ *VDE* is a trademark of Verband Deutscher Elektrotechniker e.V.
** ISO is a registered trademark of the International Organization of Standards

©2016 General Electric Company. All rights reserved.

JRCW016A0R Orca Series; DC-DC Converter Power Modules

36–75 Vdc Input; 28.0Vdc Output; 16Adc Output

Absolute Maximum Ratings

Stresses in excess of the absolute maximum ratings can cause permanent damage to the device. These are absolute stress ratings only, functional operation of the device is not implied at these or any other conditions in excess of those given in the operations sections of the data sheet. Exposure to absolute maximum ratings for extended periods can adversely affect the device reliability.

Parameter	Device	Symbol	Min	Max	Unit
Input Voltage					
Continuous	All	V_{IN}	-0.3	80	V_{dc}
Transient, operational (≤100 ms)	All	$V_{IN,trans}$	-0.3	100	V_{dc}
Operating Ambient Temperature	All	Ta	-40	85	°C
Operating Case Temperature (See Thermal Considerations section, Figure 17)	All	Tc	-40	100	°C
Storage Temperature	All	T_{stg}	-55	125	°C
I/O Isolation Voltage (Current trip point=5mA):					
Input to Case, Input to Output	All	—	—	1500	V_{dc}
Output to Case	All	—	—	500	V_{dc}

Electrical Specifications

Unless otherwise indicated, specifications apply over all operating input voltage, resistive load, and temperature conditions.

Parameter	Device	Symbol	Min	Typ	Max	Unit
Operating Input Voltage (see Figure 12 for $V_{IN\ MIN}$ when using trim-up feature)	All	V_{IN}	36	48	75	V_{dc}
Maximum Input Current (V_{IN}=36V to 75V, I_O=$I_{O,\ max}$)	All	$I_{IN,max}$			14.0	A_{dc}
Inrush Transient	All	I^2t			2	A^2s
Input Reflected Ripple Current, peak-to-peak (5Hz to 20MHz, 12µH source impedance; V_{IN}=0V to 75V, I_O= I_{Omax} ; see Figure 7)	All				20	mA_{p-p}
Input Ripple Rejection (120Hz)	All			50		dB

CAUTION: This power module is not internally fused. An input line fuse must always be used.

This power module can be used in a wide variety of applications, ranging from simple standalone operation to being an integrated part of complex power architecture. To preserve maximum flexibility, internal fusing is not included. Always use an input line fuse, to achieve maximum safety and system protection. The safety agencies require a time-delay or fast-acting fuse with a maximum rating of 25 A in the ungrounded input connection (see Safety Considerations section). Based on the information provided in this data sheet on inrush energy and maximum dc input current, the same type of fuse with a lower rating can be used. Refer to the fuse manufacturer's data sheet for further information.

©2016 General Electric Company. All rights reserved.

JRCW016A0R Orca Series; DC-DC Converter Power Modules

36–75 Vdc Input; 28.0Vdc Output; 16Adc Output

Electrical Specifications (continued)

Parameter	Device	Symbol	Min	Typ	Max	Unit
Output Voltage Set-point ($V_{IN}=V_{IN,nom}$, $I_O=I_{O,max}$, T_c =25°C)	All	$V_{O,set}$	27.5	28	28.5	V_{dc}
Output Voltage Set-Point Total Tolerance (Over all operating input voltage, resistive load, and temperature conditions until end of life)	All	V_O	27.0	—	29.0	V_{dc}
Output Regulation						
Line ($V_{IN}=V_{IN,min}$ to $V_{IN,max}$)	All		—	0.1	0.2	$\%V_{o,set}$
Load ($I_O=I_{O,min}$ to $I_{O,max}$)	All		—	0.1	0.2	$\%V_{o,set}$
Temperature (T_c = -40ºC to +100ºC)	All		—	0.25	0.5	$\%V_{o,set}$
Output Ripple and Noise on nominal output ($V_{IN}=V_{IN,nom}$ and $I_O=I_{O,min}$ to $I_{O,max}$)						
RMS (5Hz to 20MHz bandwidth)	All		—	45	55	mV_{rms}
Peak-to-Peak (5Hz to 20MHz bandwidth)	All		—	80	200	mV_{pk-pk}
External Capacitance (ESR > 2.5 mΩ)[1]	All, except -T	C_O	440		6500	µF
Without the Tunable Loop (ESR_{MAX} = 80mΩ)[1]	-T	$C_{O,}$	440		470	µF
With the Tunable Loop (ESR > 50 mΩ)[2]	-T	C_O	440		10,000	µF
Output Power (V_o=28V to 35.2V)	All	$P_{O,max}$	—	—	450	W
Output Current	All	I_o	0		16.0	A_{dc}
Output Current Limit Inception (Constant current until $V_o<V_{trimMIN}$, duration <4s)	All	$I_{O,lim}$	17.0	—	21.0	A_{dc}
Output Short Circuit Current (V_O≤ 0.25V_{dc})	All	$I_{O,sc}$			30	A_{rms}
Efficiency $V_{IN}=V_{IN,nom}$, T_c=25°C $I_O=I_{O,max}$, V_O= $V_{O,set}$	All	η	93.0	93.5	—	%
Switching Frequency		f_{sw}	—	175	—	kHz
Dynamic Load Response ($\Delta Io/\Delta t$=1A/10µs; $V_{in}=V_{in,nom}$; T_c=25°C; Tested with a 470 µF aluminum and a 10 µF ceramic capacitor across the load.)						
Load Change from Io= 50% to 75% of Io,max:						
Peak Deviation	All	V_{pk}	—	2	3	$\%V_{O,set}$
Settling Time (Vo<10% peak deviation)		t_s	—	1.5	—	ms
Load Change from Io= 25% to 50% of Io,max:						
Peak Deviation		V_{pk}	—	2	3	$\%V_{O,set}$
Settling Time (Vo<10% peak deviation)		t_s	—	1.5	—	ms

[1] Note: use a minimum 2 x 220uF output capacitor. Recommended capacitor is Nichicon CD series, 220uF/35V. If the ambient temperature is less than -20°C, use more than 3 of recommended minimum capacitors.

[2] External capacitors may require using the new Tunable Loop feature to ensure that the module is stable as well as getting the best transient response. See the Tunable Loop section for details.

Isolation Specifications

Parameter	Symbol	Min	Typ	Max	Unit
Isolation Capacitance	C_{iso}	—	15	—	nF
Isolation Resistance	Riso	10	—	—	MΩ

©2016 General Electric Company. All rights reserved.

JRCW016A0R Orca Series; DC-DC Converter Power Modules

36–75 Vdc Input; 28.0Vdc Output; 16Adc Output

General Specifications

Parameter	Device	Symbol	Min	Typ	Max	Unit
Calculated Reliability based upon Telcordia SR-332 Issue 3: Method I Case 3 (I_O=80%$I_{O,max}$, T_A=40°C, airflow = 200 lfm, 90% confidence)	All	FIT		214.5		10^9/Hours
		MTBF		4,661,316		Hours
Weight	All		68	76.4	84	g
			2.40	2.69	2.96	oz.

Feature Specifications

Unless otherwise indicated, specifications apply over all operating input voltage, resistive load, and temperature conditions. See Feature Descriptions for additional information.

Parameter	Device	Symbol	Min	Typ	Max	Unit
Remote On/Off Signal Interface (V_{IN}=$V_{IN,min}$ to $V_{IN,max}$; open collector or equivalent, Signal referenced to V_{IN-} terminal) Negative Logic: device code suffix "1" Logic Low = module On, Logic High = module Off Positive Logic: No device code suffix required Logic Low = module Off, Logic High = module On						
Logic Low - Remote On/Off Current	All	$I_{on/off}$	—	—	1.0	mA
Logic Low - On/Off Voltage	All	$V_{on/off}$	0	—	1.2	V_{dc}
Logic High Voltage – (Typ = Open Collector)	All	$V_{on/off}$	—		5	V_{dc}
Logic High maximum allowable leakage current	All	$I_{on/off}$	—	—	50	µA
Turn-On Delay and Rise Times (Vin=$V_{in,nom}$, I_O=$I_{O,max}$, 25C)						
Case 1: T_{delay} = Time until V_O = 10% of $V_{O,set}$ from application of V_{in} with Remote On/Off set to ON,	All	T_{delay}		120		ms
Case 2: T_{delay} = Time until V_O = 10% of $V_{O,set}$ from application of Remote On/Off from Off to On with V_{in} already applied for at least one second.	All	T_{delay}	—	20		ms
T_{rise} = time for V_O to rise from 10% of $V_{O,set}$ to 90% of $V_{O,set}$.	All	T_{rise}	—	30	—	ms
Output Voltage Overshoot (I_O=80% of $I_{O,max}$, T_A=25°C)					3	% $V_{O,set}$
Output Voltage Adjustment (See Feature Descriptions):						
Output Voltage Remote-sense Range (only for No Trim or Trim down application)	All	V_{sense}	—	—	2	%$V_{o,nom}$
Output Voltage Set-point Adjustment Range (trim)	All	V_{trim}	14.0	---	35.2	V_{dc}
Output Overvoltage Protection	All	$V_{O,limit}$	37	—	39	V_{dc}
Over Temperature Protection (See Feature Descriptions, Figure 17)	All	T_{ref}	105	110	120	°C
Input Under Voltage Lockout		$V_{IN,UVLO}$				
Turn-on Threshold	All			35	36	V_{dc}
Turn-off Threshold	All		31	32		V_{dc}
Hysteresis	All			3		V_{dc}
Input Over voltage Lockout		$V_{IN,OVLO}$				
Turn-on Threshold	All		—	79.5	81	V_{dc}
Turn-off Threshold	All		81	83	—	V_{dc}
Hysteresis	All		---	3	---	V_{dc}

©2016 General Electric Company. All rights reserved.

JRCW016A0R Orca Series; DC-DC Converter Power Modules

36–75 Vdc Input; 28.0Vdc Output; 16Adc Output

Characteristic Curves

The following figures provide typical characteristics for the JRCW016A0R (28V, 16A) at 25ºC. The figures are identical for either positive or negative Remote On/Off logic.

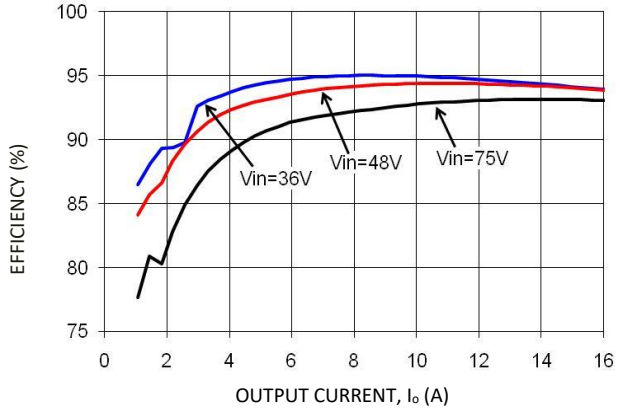

Figure 1. Converter Efficiency versus Output Current.

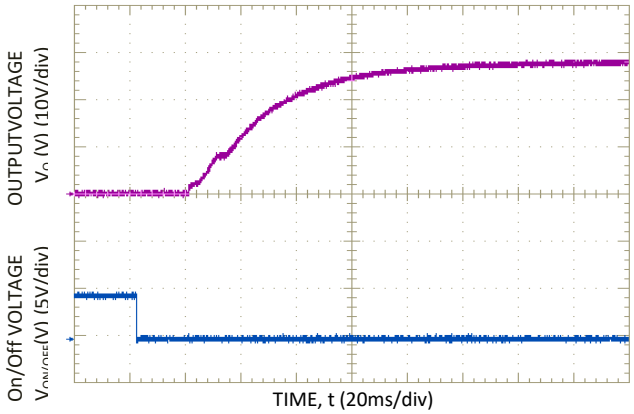

Figure 4. Typical Start-Up Using negative Remote On/Off; $C_{o,ext}$ = 440µF.

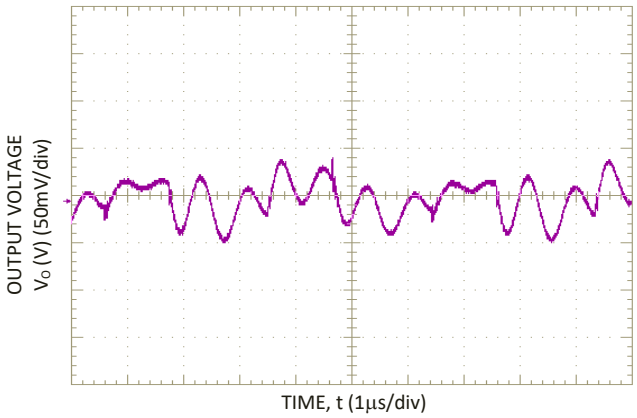

Figure 2. Typical Output Ripple and Noise at Room Temperature and 48Vin; $I_o = I_{o,max}$; $C_{o,ext}$ = 440µF.

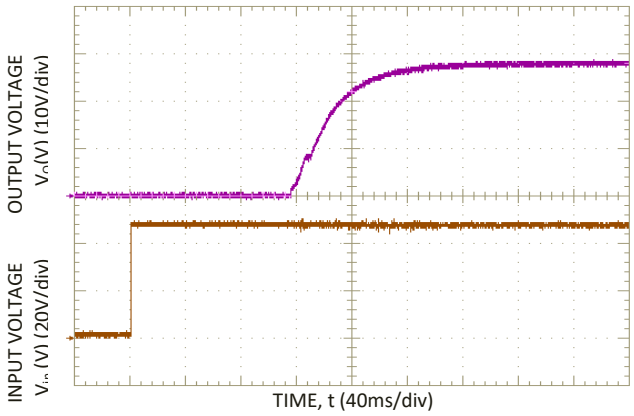

Figure 5. Typical Start-Up from V_{IN}, on/off enabled prior to V_{IN} step; $C_{o,ext}$ = 470µF.

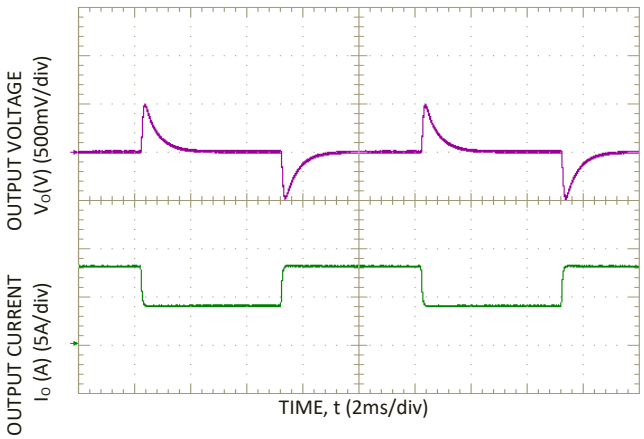

Figure 3. Dynamic Load Change Transient Response from 25% to 50% to 25% of Full Load at Room Temperature and 48 Vin; 0.1A/uS, $C_{o,ext}$ = 440µF.

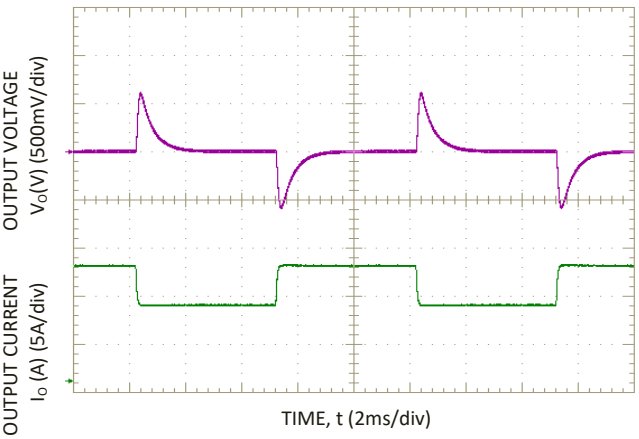

Figure 6. Dynamic Load Change Transient Response from 50 % to 75% to 50% of Full Load at Room Temperature and 48 Vin; 0.1A/uS, $C_{o,ext}$ = 440µF.

©2016 General Electric Company. All rights reserved.

JRCW016A0R Orca Series; DC-DC Converter Power Modules

36–75 Vdc Input; 28.0Vdc Output; 16Adc Output

Test Configurations

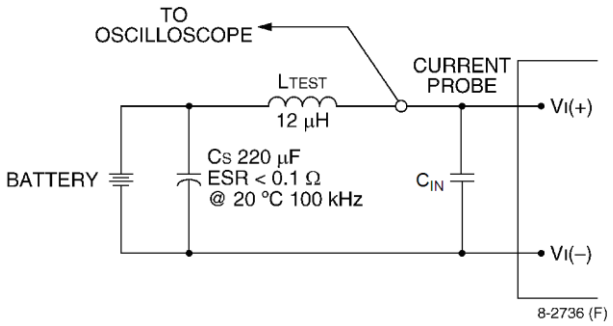

Note: Measure the input reflected-ripple current with a simulated source inductance (LTEST) of 12 µH. Capacitor CS offsets possible battery impedance. Measure the current, as shown above.

Figure 7. Input Reflected Ripple Current Test Setup.

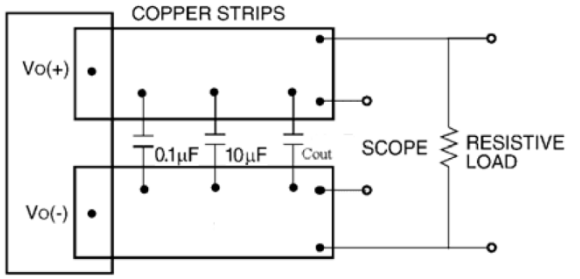

Note: Use a Cout (470 µF Low ESR aluminum or tantalum capacitor typical), a 0.1 µF ceramic capacitor and a 10 µF ceramic capacitor, and Scope measurement should be made using a BNC socket. Position the load between 51 mm and 76 mm (2 in. and 3 in.) from the module.

Figure 8. Output Ripple and Noise Test Setup.

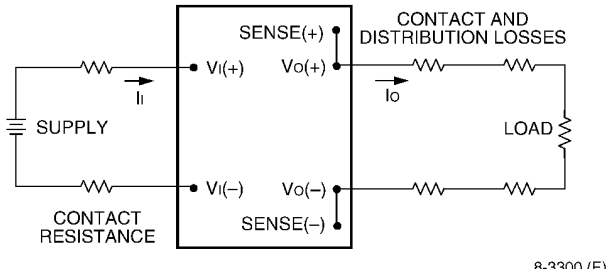

Note: All measurements are taken at the module terminals. When socketing, place Kelvin connections at module terminals to avoid measurement errors due to socket contact resistance.

$$\eta = \left(\frac{[V_O(+) - V_O(-)]I_O}{[V_I(+) - V_I(-)]I_I} \right) \times 100\ \%$$

Figure 9. Output Voltage and Efficiency Test Setup.

Design Considerations

Input Source Impedance

The power module should be connected to a low ac-impedance source. A highly inductive source impedance can affect the stability of the power module. For the test configuration in Figure 7, a 470µF Low ESR aluminum capacitor, C_{IN} , mounted close to the power module helps ensure the stability of the unit. Consult the factory for further application guidelines.

Output Capacitance

The JRCW016A0R power module requires a minimum output capacitance of 440µF Low ESR aluminum capacitor, C_{out} to ensure stable operation over the full range of load and line conditions, see Figure 8. If the ambient temperature is under -20C, it is required to use at least 3 pcs of minimum capacitors in parallel. In general, the process of determining the acceptable values of output capacitance and ESR is complex and is load-dependent.

Safety Considerations

For safety agency approval the power module must be installed in compliance with the spacing and separation requirements of the end-use safety agency standards, i.e., UL ANSI/UL 62368-1 and CAN/CSA C22.2 No. 62368-1 Recognized, DIN VDE 0868-1/A11:2017 (EN62368-1:2014/A11:2017)

For end products connected to –48V dc, or –60Vdc nominal DC MAINS (i.e. central office dc battery plant), no further fault testing is required. *Note: -60V dc nominal battery plants are not available in the U.S. or Canada.

For all input voltages, other than DC MAINS, where the input voltage is less than 60V dc, if the input meets all of the requirements for SELV, then:

- The output may be considered SELV/ES1. Output voltages will remain within SELV/ES1 limits even with internally-generated non-SELV/ES1 voltages. Single component failure and fault tests were performed in the power converters.

- One pole of the input and one pole of the output are to be grounded, or both circuits are to be kept floating, to maintain the output voltage to ground voltage within ELV or SELV/ES1 limits. However, SELV/ES1 will not be maintained if $V_I(+)$ and $V_O(+)$ are grounded simultaneously.

©2016 General Electric Company. All rights reserved.

Safety Considerations (continued)

For all input sources, other than DC MAINS, where the input voltage is between 60 and 75V dc (Classified as TNV-2 in Europe), the following must be meet, if the converter's output is to be evaluated for SELV/ES1:

- The input source is to be provided with reinforced insulation from any hazardous voltage, including the ac mains.
- One Vi pin and one Vo pin are to be reliably earthed, or both the input and output pins are to be kept floating.
- Another SELV/ES1 reliability test is conducted on the whole system, as required by the safety agencies, on the combination of supply source and the subject module to verify that under a single fault, hazardous voltages do not appear at the module's output.

All flammable materials used in the manufacturing of these modules are rated 94V-0, or tested to the UL60950 A.2 for reduced thickness.

The input to these units is to be provided with a maximum 25 A fast-acting or time-delay fuse in the ungrounded input conection.

Feature Description

Remote On/Off

Two remote on/off options are available. Positive logic turns the module on during a logic high voltage on the ON/OFF pin, and off during a logic low. Negative logic remote On/Off, device code suffix "1", turns the module off during a logic high and on during a logic low.

To turn the power module on and off, the user must supply a switch (open collector or equivalent) to control the voltage ($V_{on/off}$) between the ON/OFF terminal and the $V_{IN}(-)$ terminal (see Figure 10). Logic low is $0V \le V_{on/off} \le 1.2V$. The maximum $I_{on/off}$ during a logic low is 1mA, the switch should be maintain a logic low level whilst sinking this current.

During a logic high, the typical maximum $V_{on/off}$ generated by the module is 5V, and the maximum allowable leakage current at $V_{on/off}$ = 5V is 50µA.

If not using the remote on/off feature:

For positive logic, leave the ON/OFF pin open.

For negative logic, short the ON/OFF pin to $V_{IN}(-)$.

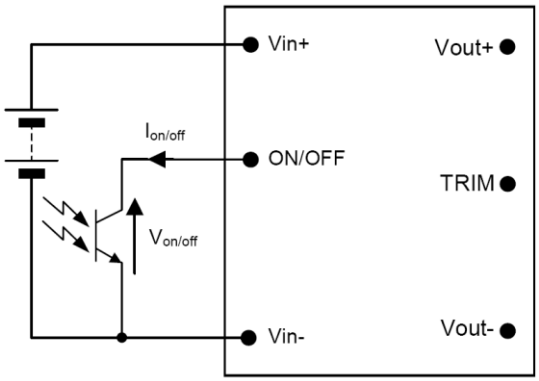

Figure 10. Circuit configuration for using Remote On/Off Implementation.

Overcurrent Protection

To provide protection in a fault output overload condition, the module is equipped with internal current limiting protection circuitry, and can endure continuous overcurrent by providing constant current output, for up to 4 seconds, as long as the output voltage is greater than $V_{trimMIN}$. If the load resistance is to low to support $V_{trimMIN}$ in an overcurrent condition or a short circuit load condition exists, the module will shutdown immediately.

A latching shutdown option is standard. Following shutdown, the module will remain off until the module is reset by either cycling the input power or by toggling the on/off pin for one second.

An auto-restart option (4) is also available in a case where an auto recovery is required. If overcurrent greater than 19A persists for few milli-seconds, the module will shut down and auto restart until the fault condition is corrected. If the output overload condition still exists when the module restarts, it will shut down again. This operation will continue indefinitely, until the overcurrent condition is corrected.

Over Voltage Protection

The output overvoltage protection consists of circuitry that monitors the voltage on the output terminals. If the voltage on the output terminals exceeds the over voltage protection threshold, then the module will shutdown and latch off. The overvoltage latch is reset by either cycling the input power for one second or by toggling the on/off signal for one second. The protection mechanism is such that the unit can continue in this condition until the fault is cleared.

An auto-restart option (4) is also available in a case where an auto recovery is required.

©2016 General Electric Company. All rights reserved.

JRCW016A0R Orca Series; DC-DC Converter Power Modules

36–75 Vdc Input; 28.0Vdc Output; 16Adc Output

Feature Description (continued)

Remote sense

Remote sense minimizes the effects of distribution losses by regulating the voltage at the remote-sense connections (see Figure 11). For No Trim or Trim down application, the voltage between the remote-sense pins and the output terminals must not exceed the output voltage sense range given in the Feature Specifications table i.e.:

$[V_o(+)–V_o(-)] – [SENSE(+) – SENSE(-)] \leq 2\%$ of $V_{o,nom}$

The voltage between the Vo(+) and Vo(-) terminals must not exceed the minimum output overvoltage shut-down value indicated in the Feature Specifications table. This limit includes any increase in voltage due to remote-sense compensation and output voltage set-point adjustment (trim). See Figure 11. If not using the remote-sense feature to regulate the output at the point of load, then connect SENSE(+) to $V_o(+)$ and SENSE(-) to $V_o(-)$ at the module.

Although the output voltage can be increased by both the remote sense and by the trim, the maximum increase for the output voltage is not the sum of both. The maximum increase is the larger of either the remote sense or the trim. The amount of power delivered by the module is defined as the voltage at the output terminals multiplied by the output current. When using remote sense and trim: the output voltage of the module can be increased, which at the same output current would increase the power output of the module. Care should be taken to ensure that the maximum output power of the module remains at or below the maximum rated power.

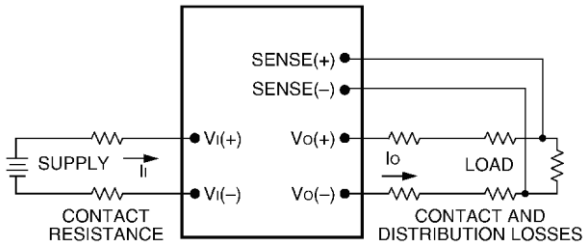

Figure 11. Effective Circuit Configuration for Single-Module Remote-Sense Operation Output Voltage.

Output Voltage Programming

Trimming allows the user to increase or decrease the output voltage set point of a module. Trimming down is accomplished by connecting an external resistor between the TRIM pin and the SENSE(-) pin. Trimming up is accomplished by connecting external resistor between the SENSE(+) pin and TRIM pin. The trim resistor should be positioned close to the module. Certain restrictions apply to the input voltage lower limit when trimming the output voltage to the maximum. See Figure 12 for the allowed input to output range when using trim. If not using the trim down feature, leave the TRIM pin open.

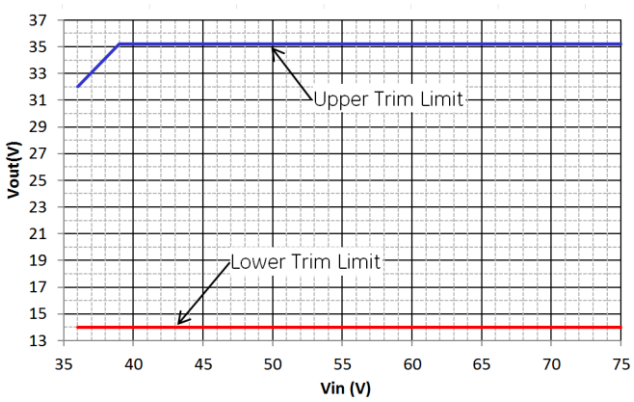

Figure 12. Output Voltage Trim Limits vs. Input Voltage.

Trim Down – Decrease Output Voltage

With an external resistor (R_{adj_down}) between the TRIM and SENSE(-) pins, the output voltage set point ($V_{o,adj}$) decreases (see Figure 13). The following equation determines the required external-resistor value to obtain a percentage output voltage change of Δ%.

For output voltages: $V_{O,nom}$ = 28V

Without –T Option	With –T Option
$R_{adj_down} = \left(\frac{100}{\Delta\%} - 2\right) k\Omega$	$R_{adj_down} = \left(\frac{1000}{\Delta\%} - 11\right) k\Omega$
Where, $\Delta\% = \left\lvert\frac{V_{o,nom} - V_{desired}}{V_{o,nom}}\right\rvert \times 100$ $V_{desired}$ = Desired output voltage set point (V).	

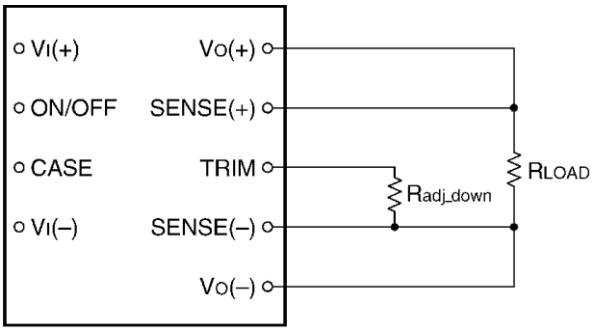

Figure 13. Circuit Configuration to Decrease Output Voltage.

Trim Up – Increase Output Voltage

With an external resistor (R_{adj_up}) connected between the SENSE(+) and TRIM pins, the output voltage set point ($V_{o,adj}$) increases (see Figure 14).

The following equation determines the required external-resistor value to obtain a percentage output voltage change of Δ%.

©2016 General Electric Company. All rights reserved.

JRCW016A0R Orca Series; DC-DC Converter Power Modules

36–75 Vdc Input; 28.0Vdc Output; 16Adc Output

Feature Description (continued)

For output voltages: $V_{O,nom}$ = 28V

Without –T Option

$$R_{adj_up} = \left[\frac{V_{O,nom} \times (100 + \Delta\%)}{1.225 \times \Delta\%} - \frac{(100 + (2 \times \Delta\%)}{\Delta\%} \right] k\Omega$$

With –T Option

$$R_{adj_up} = \left(\frac{27122}{\Delta\%} + 15.12 \right) k\Omega$$

Where,

$$\Delta\% = \left| \frac{V_{desired} - V_{o,nom}}{V_{o,nom}} \right| \times 100$$

$V_{desired}$ = Desired output voltage set point (V).

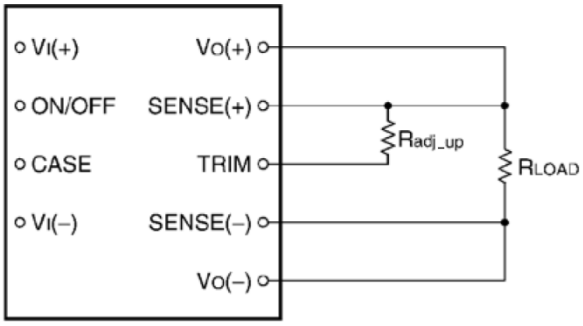

Figure 14. Circuit Configuration to Increase Output Voltage.

The voltage between the Vo(+) and Vo(-) terminals must not exceed the minimum output overvoltage shut-down value indicated in the Feature Specifications table. This limit includes any increase in voltage due to remote- sense compensation and output voltage set-point adjustment (trim). See Figure 11.

Although the output voltage can be increased by both the remote sense and by the trim, the maximum increase for the output voltage is not the sum of both.

The maximum increase is the larger of either the remote sense or the trim.

The amount of power delivered by the module is defined as the voltage at the output terminals multiplied by the output current. When using remote sense and trim, the output voltage of the module can be increased, which the same output current would increase the power output of the module. Care should be taken to ensure that the maximum output power of the module remains at or below the maximum rated power.

Examples:

To trim down the output of a nominal 28V module, without –T option, to 16.8V

$$\Delta\% = \left| \frac{28 - 16.8}{28} \right| \times 100 = 40\%$$

$$R_{adj_down} = \left(\frac{100}{40} - 2 \right) = 0.5k\Omega$$

To trim up the output of a nominal 28V module, without –T option, to 30.8V

$$\Delta\% = \left| \frac{30.8 - 28}{28} \right| \times 100 = 10.0\%$$

$$R_{adj_up} = \left[\frac{28 \times (100 + 10)}{1.225 \times 10} - \frac{(100 + (2 \times 10)}{10} \right]$$

R_{adj_up} = 239kΩ

Active Voltage Programming

For both the JRCW016A0Rx and JRCW016A0Rx-T, a Digital-Analog converter (DAC), capable of both sourcing and sinking current, can be used to actively set the output voltage, as shown in Figure 15. The value of R_G will be dependent on the voltage step and range of the DAC and the desired values for trim-up and trim-down Δ%. Please contact your GE technical representative to obtain more details on the selection for this resistor.

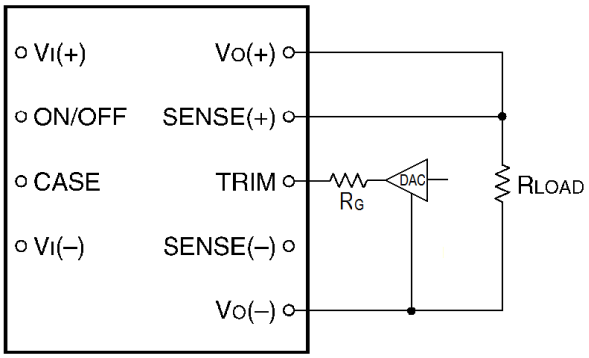

Figure 15. Circuit Configuration to Actively Adjust the Output Voltage.

Tunable Loop

The JRCW016A0Rx-T modules have a new feature that optimizes transient response of the module called Tunable Loop.

External capacitors are usually added to the output of the module for two reasons: to reduce output ripple and noise and to reduce output voltage deviations from the steady-state value in the presence of dynamic load current changes. Adding external capacitance however affects the voltage control loop of the module, typically causing the loop to slow down with sluggish response. Larger values of external capacitance could also cause the module to become unstable.

The Tunable Loop allows the user to externally adjust the voltage control loop to match the filter network connected to the output of the module. The Tunable Loop is implemented by connecting a series R-C between the SENSE(+) and TRIM pins of the module, as shown in Fig. 16. This R-C allows the user to externally adjust the voltage loop feedback compensation of the module.

©2016 General Electric Company. All rights reserved.

JRCW016A0R Orca Series; DC-DC Converter Power Modules

36–75 Vdc Input; 28.0Vdc Output; 16Adc Output

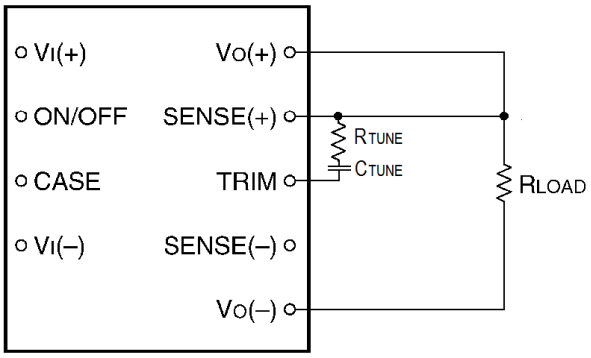

Figure 16. Circuit diagram showing connection of R_{TUNE} and C_{TUNE} to tune the control loop of the module.

Table 1 shows the recommended values of R_{TUNE} and C_{TUNE} for different values of ceramic output capacitors up to 8000μF that might be needed for an
application to meet output ripple and noise requirements.

Table 1. General recommended values of of R_{TUNE} and C_{TUNE} for V_{out}=28V and various external ceramic capacitor combinations.

C_{out}(μF)	1100	2200	4400	6600	8800
ESR (mΩ)	60	30	15	10	7.5
R_{TUNE}	12k	4.7k	1.8k	820	390
C_{TUNE}	220nF	220nF	220nF	220nF	220nF

Please contact your GE technical representative to obtain more details of this feature as well as for guidelines on how to select the right value of external R-C to tune the module for best transient performance and stable operation for other output capacitance values.

Over Temperature Protection

The JRCW016A0R module provides a non-latching over temperature protection. A temperature sensor monitors the operating temperature of the converter. If the reference temperature, $T_{REF\,1}$, (see Figure 17) exceeds a threshold of 115 ºC (typical), the converter will shut down and disable the output. When the base plate temperature has decreased by approximately 20 ºC the converter will automatically restart.

The module can be restarted by cycling the dc input power for at least one second or by toggling the remote on/off signal for at least one second.

Thermal Considerations

The power modules operate in a variety of thermal environments; however, sufficient cooling should be provided to help ensure reliable operation of the unit. Heat-dissipating components inside the unit are thermally coupled to the case. Heat is removed by conduction, convection, and radiation to the surrounding environment. Proper cooling can be verified by measuring the case temperature. Peak temperature (T_{REF}) occurs at the position indicated in Figure 17.

Considerations include ambient temperature, airflow, module power dissipation, and the need for increased reliability. A reduction in the operating temperature of the module will result in an increase in reliability.

The thermal data presented here is based on physical measurements taken in a wind tunnel, using automated thermo-couple instrumentation to monitor key component temperatures: FETs, diodes, control ICs, magnetic cores, ceramic capacitors, opto-isolators, and module pwb conductors, while controlling the ambient airflow rate and temperature. For a given airflow and ambient temperature, the module output power is increased, until one (or more) of the components reaches its maximum derated operating temperature, as defined in IPC-9592. This procedure is then repeated for a different airflow or ambient temperature until a family of module output derating curves is obtained.

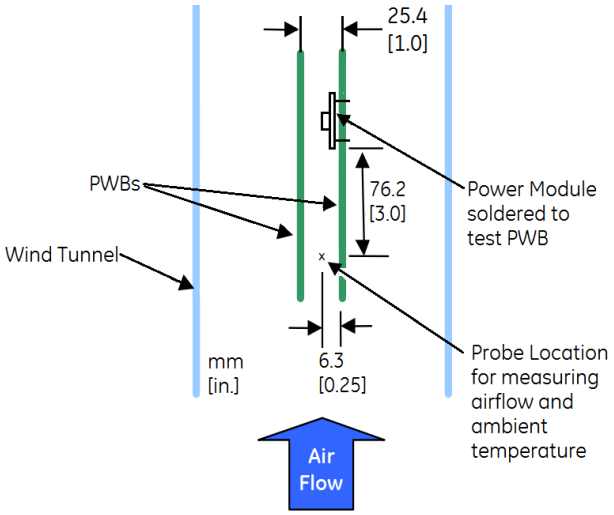

Heat-dissipating components inside the unit are thermally coupled to the case. Heat is removed by conduction, convection, and radiation to the surrounding environment.

For reliable operation this temperature should not exceed 100ºC at either $T_{REF\,1}$ or $T_{REF\,2}$ for applications using forced convection airflow or cold plate applications. The output power of the module should not exceed the rated power for the module as listed in the ordering Information table. Although the maximum T_{REF} temperature of the power modules is discussed above, you can limit this temperature to a lower value for extremely high reliability.

©2016 General Electric Company. All rights reserved.

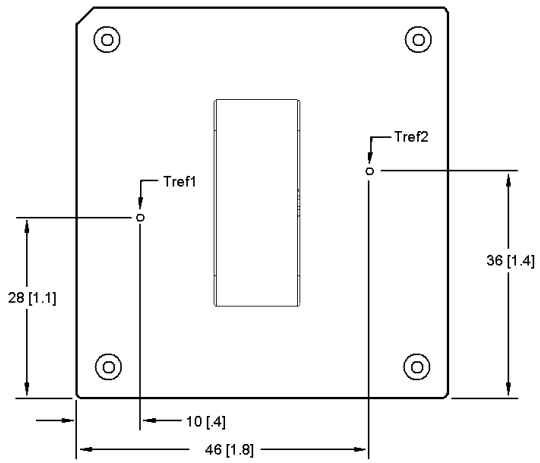

Figure 17. Case (T_{REF}) Temperature Measurement Location (top view).

Thermal Derating

Thermal derating is presented for two different applications: 1) Figure 18, the JRCW016A0R module is thermally coupled to a cold plate inside a sealed clamshell chassis, without any internal air circulation; and 2) Figure 19, 20 and 21, the JRCW016A0R module is mounted in a traditional open chassis or cards with forced air flow. In application 1, the module is cooled entirely by conduction of heat from the module primarily through the top surface to a cold plate, with some conduction through the module's pins to the power layers in the system board. For application 2, the module is cooled by heat removal into a forced airflow that passes through the interior of the module and over the top base plate and/or attached heatsink.

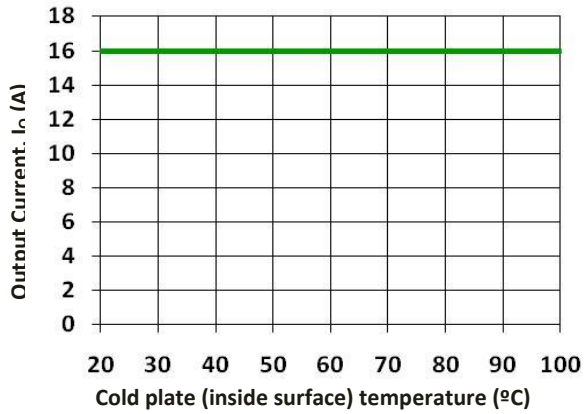

Figure 18. Output Power Derating for JRCW016A0R in Conduction cooling (cold plate) applications; T_a <70ºC adjacent to module; V_{IN} = $V_{IN,NOM}$

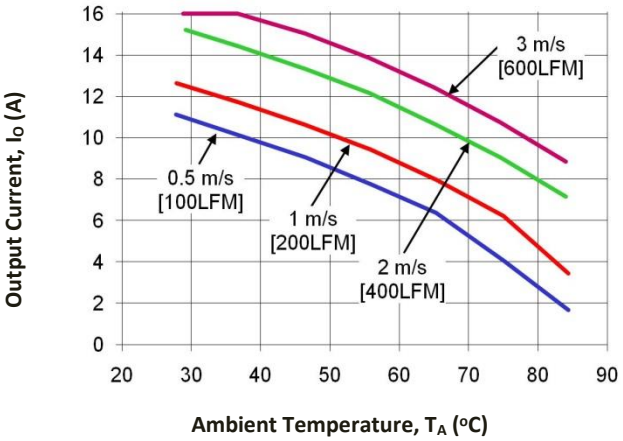

Figure 19. Derating Output Current vs. local Ambient temperature and Airflow, No Heatsink, Vin=48V, airflow from Vi(-) to Vi(+).

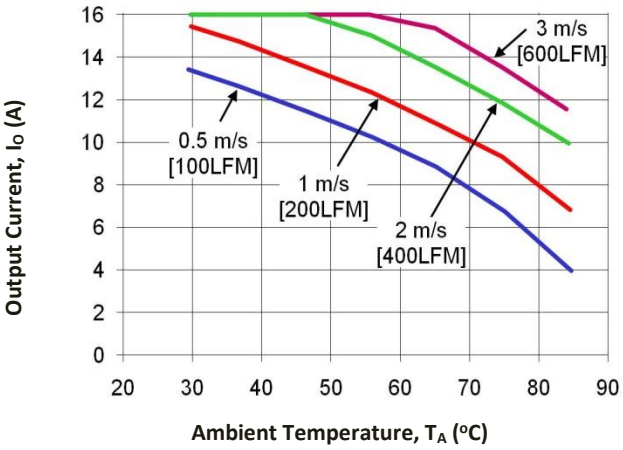

Figure 20. Derating Output Current vs. local Ambient temperature and Airflow, 0.5" Heatsink, Vin=48V, airflow from Vi(-) to Vi(+).

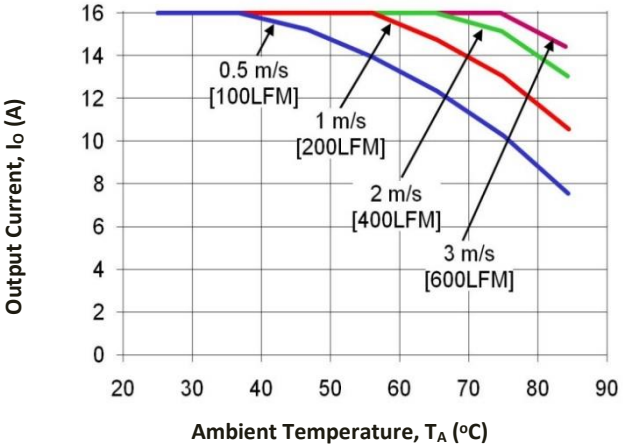

Figure 21. Derating Output Current vs. local Ambient temperature and Airflow, 1.0" Heatsink, Vin=48V, airflow from Vi(-) to Vi(+).

©2016 General Electric Company. All rights reserved.

Layout Considerations

The JRCW016A0R power module series are constructed using a single PWB with integral base plate; as such, component clearance between the bottom of the power module and the mounting (Host) board is limited. Avoid placing copper areas on the outer layer directly underneath the power module.

Post Solder Cleaning and Drying Considerations

Post solder cleaning is usually the final circuit-board assembly process prior to electrical board testing. The result of inadequate cleaning and drying can affect both the reliability of a power module and the testability of the finished circuit-board assembly. For guidance on appropriate soldering, cleaning and drying procedures, refer to GE *Board Mounted Power Modules: Soldering and Cleaning* Application Note.

Through-Hole Lead-Free Soldering Information

The RoHS-compliant through-hole products use the SAC (Sn/Ag/Cu) Pb-free solder and RoHS-compliant components. They are designed to be processed through single or dual wave soldering machines. The pins have an RoHS-compliant finish that is compatible with both Pb and Pb-free wave soldering processes. A maximum preheat rate of 3°C/s is suggested. The wave preheat process should be such that the temperature of the power module board is kept below 210°C. For Pb solder, the recommended pot temperature is 260°C, while the Pb-free solder pot is 270°C max. The JRCW016A0R can not be processed with paste-through-hole Pb or Pb-free reflow process. If additional information is needed, please consult with your GE representative for more details.

©2016 General Electric Company. All rights reserved.

JRCW016A0R Orca Series; DC-DC Converter Power Modules

36–75 Vdc Input; 28.0Vdc Output; 16Adc Output

Mechanical Outline for Through-Hole Module

Dimensions are in millimeters and [inches].

Tolerances: x.x mm ± 0.5 mm [x.xx in. ± 0.02 in.] (Unless otherwise indicated)

x.xx mm ± 0.25 mm [x.xxx in ± 0.010 in.]

*Top side label includes GE name, product designation, and data code.

TOP VIEW*

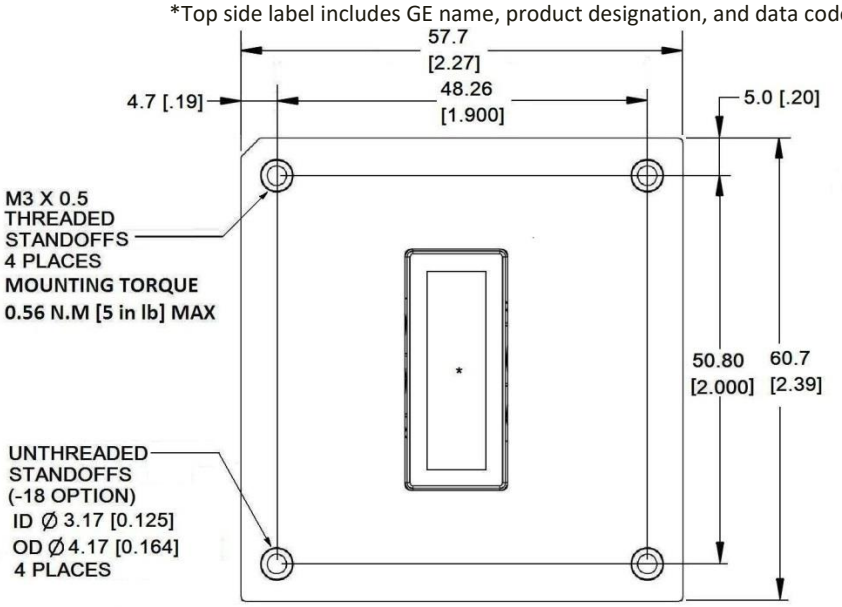

SIDE VIEW**

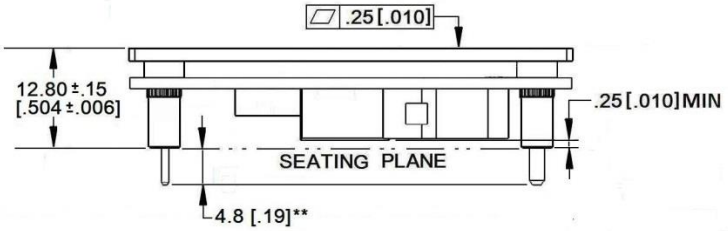

** FOR OPTIONAL PIN LENGTHS AND UNTHREADED INSERTS, SEE TABLE 3, DEVICE OPTIONS

BOTTOM VIEW

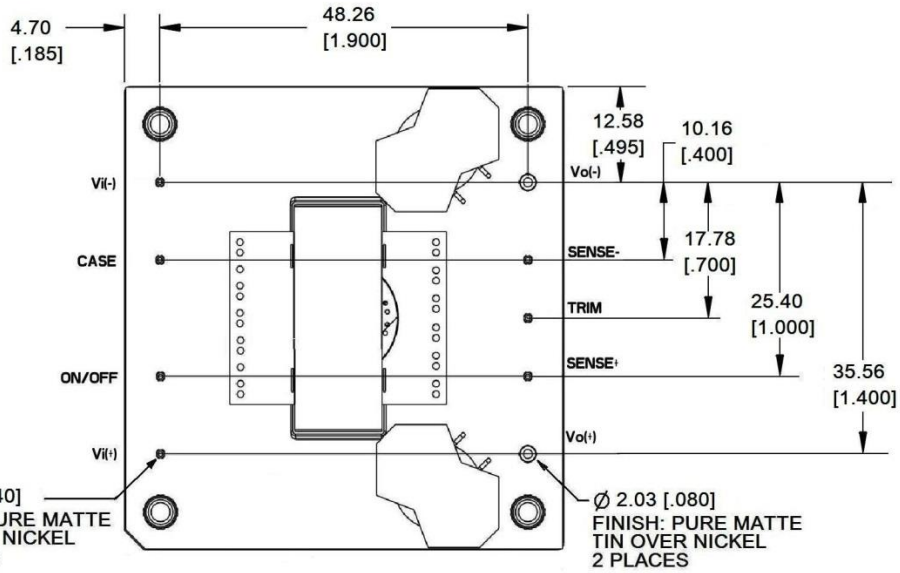

Pin	Description
1	Vin (+)
2	On/Off
3	Baseplate
4	Vin (–)
5	Vout (–)
6	Sense (-)
7	Trim

©2016 General Electric Company. All rights reserved.

8	Sense (+)
9	Vout (+)

©2016 General Electric Company. All rights reserved.

Recommended Pad Layout for Through Hole Module

Dimensions are in millimeters and [inches].

Tolerances: x.x mm ± 0.5 mm [x.xx in. ± 0.02 in.] (Unless otherwise indicated)

x.xx mm ± 0.25 mm [x.xxx in ± 0.010 in.]

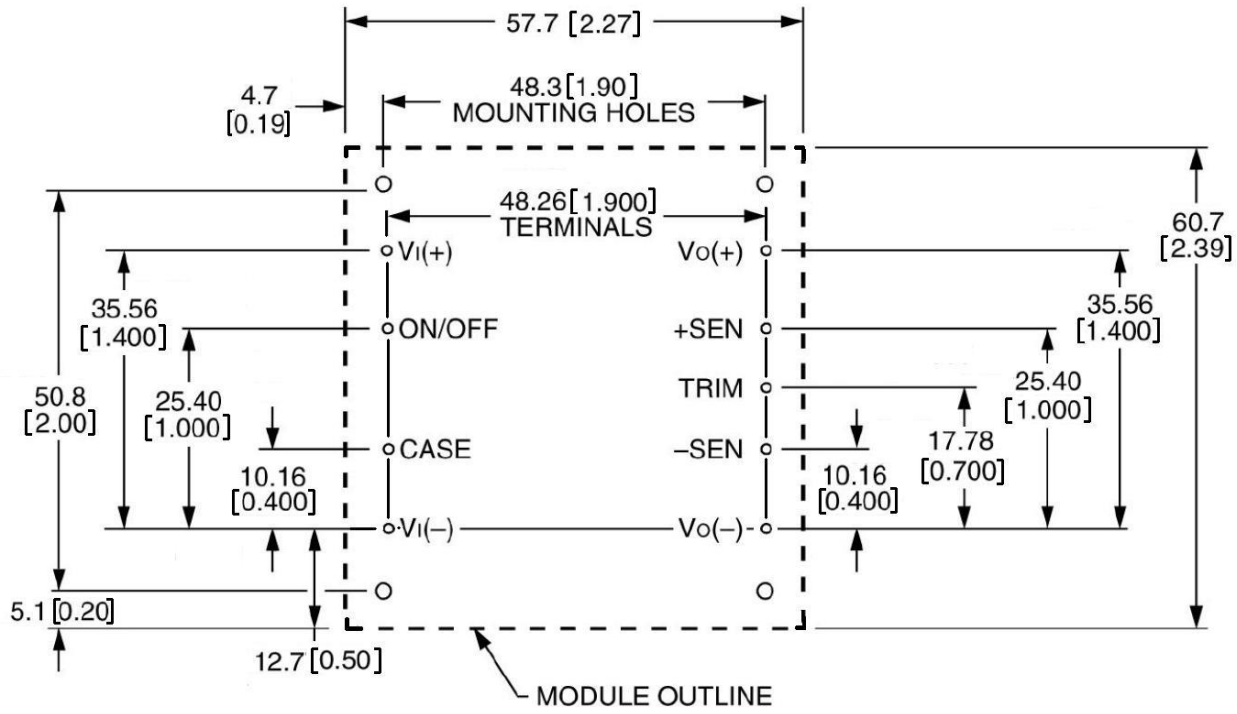

©2016 General Electric Company. All rights reserved.

JRCW016A0R Orca Series; DC-DC Converter Power Modules

36–75 Vdc Input; 28.0Vdc Output; 16Adc Output

Ordering Information

Please contact your GE Sales Representative for pricing, availability and optional features.

Table 2. Device Code

Input Voltage	Output Voltage	Output Current	Efficiency	Connector Type	Product codes	Comcodes
48V (36-75Vdc)	28V	16A	93.5%	Through hole	JRCW016A0R41Z	CC109168943
48V (36-75Vdc)	28V	16A	93.5%	Through hole	JRCW016A0R841Z	150037686
48V (36-75Vdc)	28V	16A	93.5%	Through hole	JRCW016A0R41-18Z	CC109168968
48V (36-75Vdc)	28V	16A	93.5%	Through hole	JRCW016A0R641-18Z	CC109169371
48V (36-75Vdc)	28V	16A	93.5%	Through hole	JRCW016A0R41-TZ	CC109168951
48V (36-75Vdc)	28V	16A	93.5%	Through hole	JRCW016A0R41-18TZ	CC109168976

Table 3. Device Options

	Characteristic	Character and Position	Definition
Ratings	Form Factor	J	**J** = Half Brick
	Family Designator	RC	**RC** = Orca Family
	Input Voltage	W	**W** = Wide Range, 36V-75V
	Output Power	016A0	**016A0** = 016.0 Amps Maximum Output Current
	Output Voltage	R	**R** = 28.0V nominal
Options	Pin Length	6 8	Omit = Default Pin Length shown in Mechanical Outline Figures **6** = Pin Length: 3.68 mm ± 0.25mm , (0.145 in. ± 0.010 in.) **8** = Pin Length: 2.79 mm ± 0.25mm , (0.110 in. ± 0.010 in.)
	Action following Protective Shutdown	4	Omit = Latching Mode **4** = Auto-restart following shutdown (Overcurrent/Overvoltage)
	On/Off Logic	1	Omit = Positive Logic **1** = Negative Logic
		_	
	Customer Specific	XY	**XY** = Customer Specific Modified Code, Omit for Standard Code
	Mechanical Features	18	Omit = M3 x 0.5 threaded heat sink insert standoffs, 4 places **18** = Unthreaded insert standoffs, 4 places
	Tunable Loop™	T	Internal compensation network optimized for Tunable Loop™ applications
	RoHS	Z	Omit = RoHS 5/6, Lead Based Solder Used **Z** = RoHS 6/6 Compliant, Lead free

Contact Us

For more information, call us at

USA/Canada:

+1 888 546 3243, or +1 972 244 9288

Asia-Pacific:

+86-21-53899666

Europe, Middle-East and Africa:

+49.89.878067-280

Go.ABB/Industrial

imagination at work

GE Critical Power reserves the right to make changes to the product(s) or information contained herein without notice, and no liability is assumed as a result of their use or application. No rights under any patent accompany the sale of any such product(s) or information.

©2012 General Electric Company. All rights reserved.