Arm® Cortex®-M

32-bit Microcontroller

NuMicro® Family
M031/M032 Series
Product Brief

The information described in this document is the exclusive intellectual property of Nuvoton Technology Corporation and shall not be reproduced without permission from Nuvoton.

Nuvoton is providing this document only for reference purposes of NuMicro microcontroller based system design. Nuvoton assumes no responsibility for errors or omissions.

All data and specifications are subject to change without notice.

For additional information or questions, please contact: Nuvoton Technology Corporation.

www.nuvoton.com

1 GENERAL DESCRIPTION

The NuMicro® M031/M032 series 32-bit microcontroller is based on Arm® Cortex®-M0 core with 32-bit hardware multiplier/divider. It features 1.8 ~ 3.6V operating voltage, 5V I/O tolerant, and runs up to 48/72 MHz within -40°C ~105°C.

The M031/M032 series provides a solution for the applications that need 1.8V low-voltage interface connection with enhanced fast 2 MSPS conversion rate 12-bit ADC, comparators and up-to 24-ch 96/144 MHz PWM control. It supports a fast and precise data conversion for the voltage, current, and sensor data, then fast response control to the external device. Additionally, the M031/M032 series also provides plenty of peripherals including Universal Serial Control Interface(USCI) that can be set as UART/SPI/I^{2}C flexibly, up to 10 sets of UART, 4 sets of SPI/I^{2}S, 4 sets of I^{2}C, and 1-wire UART interface for data communication between master and slave devices.

The M031/M032 series provides Flash size from 16 Kbytes to 512 Kbytes, SRAM size from 2 Kbytes to 96 Kbytes. Supported packages from small form factor TSSOP 20-pin, TSSOP 28-pin, QFN 33-pin, LQFP 48-pin to LQFP 64-pin and LQFP 128-pin with pin-compatible for different part numbers makes the system design and parts change easily.

Part Numbers with the M032 series are all based on the M031 series and enhanced with the crystal-less USB 2.0 full-speed device feature for USB related applications.

For the development, Nuvoton provides the NuMaker-PFM evaluation board and Nuvoton Nu-Link debugger. The 3rd Party IDE such as Keil MDK, IAR EWARM, Eclippse IDE with GNU GCC compilers are also supported.

Product Line	UART	I^{2}C	SPI/ I^{2}S	Timer	USCI	PWM	PDMA	EBI	ADC	ACMP	Divider	USBD
M031/M032	8	2	2	4	2	24	9	1	16	2	1	1

Table 1-1 NuMicro® M031/M032 Series Key Features Support Table

The NuMicro® M031/M032 series is suitable for a wide range of applications such as:

- Laser Distance Meter
- Air Detector/Cleaner
- Mobile LCD Panel Controller
- IoT Sensing Device
- HMI Controller
- Micro Printer
- Gaming Keyboard and Mouse
- WPC Wireless Charger

2 FEATURES

- **Operating Characteristics**
  - Voltage range: 1.8V to 3.6V
  - Temperature range: -40°C to +105°C
  - EFT 4.4 KV
  - ESD HBM 6 KV
- **Core**
  - Arm® Cortex®-M0 processor running up to 48/72 MHz
- **Memories**
  - Up to 512 KB Flash
  - Up to 96 KB SRAM
  - Up to 8 KB Flash for user program loader (LDROM)
  - ISP/ICP/IAP programming
  - External Bus Interface (EBI) supports maximum external address space of 1 Mbytes
  - Up to 2 KB SPROM
  - Dual-Bank for Over-The–Air (OTA) upgrade
- **Clocks**
  - 4 to 32 MHz HXT crystal oscillator or external input clock
  - 32.768 kHz LXT crystal oscillator or external input clock for low-power system operation
  - Internal 48 MHz HIRC oscillator with variation ±2 % within all temperature range
  - Internal 38.4 kHz LIRC for low-power operating mode.
  - One PLL up to 96/144 MHz for high speed module operation.
- **Power management**
  - Integrated with Power-on Reset, Brown-out Reset and Low voltage Reset
  - Normal run: 180 uA/MHz
  - Power-down: 12 uA
  - Supports wake up from Power-down mode by: ACMP, GPIO, WDT, TIMER, UART, USCI, I²C, SPI, WWDT, ADC, PDMA, PWM, USBD
- **Timers**
  - Up to four 32-bit timers
  - 96/144 MHz 16-bit PWM (Up to 24 channels)
  - One 24-bit SysTick timer
  - One Independent watchdog
  - One window watchdog
  - RTC with Calendar and Alarm
- **PDMA**
  - Up to 9 channels
  - Channel can be operated by – software trigger, SPI/I²S, USPI, UART, UUART, I²C, ADC, USBD, PWM and Timer
- **Cryptography Accelerator**
  - Supports CRC accelerator: CRC-CCITT, CRC-8, CRC-16, and CRC-32 polynomials
- **IEC-60730**
  - Supports IEC-60730 Safety specifications.
- **Analog**
  - Up to 16 channels 12-bit 2 MSPS SAR ADC
  - Two rail-to-rail comparators (ACMP)
- **Communication interfaces**
  - Up to 4 sets of 6 MHz UART interfaces with UART, RS-485 and IrDA mode
  - Up to 4 sets of UART for simple TX/RX operation
  - 2 sets of 400 kHz I²C interfaces
  - 1 set of 24 MHz SPI/I²S interface
  - Up to 1 set of quad SPI
  - Up to 2 sets of USCI interfaces that supports UART, SPI and I²C mode
- **Advanced Communication Interface**
  - USB 2.0 full speed device with on-chip PHY (crystal-less design)[1]
- **Up to 111 I/O with interrupt capability**
  - Schmitt trigger input
  - Four I/O modes
  - Supports Schmitt type (Not support TTL input)
  - 5V tolerant I/O except analog pins
- **Serial Wire Debug (SWD)**
  - Nuvoton Nu-Link debugger support
- **32-bit H/W Divider(HDIV)**
  - 32-bit dividend with 16-bit divisor calculation capacity
  - 6 HCLK clocks taken for one cycle calculation
- **Utility Support**
  - Arm® Keil RVMDK and IAR EWARM IDE support for debugging
  - Free GNU compiler with Eclipse IDE support
  - ICP (In Circuit Programmer) support for updating internal code via Nu-Link debugger
  - ISP (In System Programmer) support for updating internal code through UART, SPI, I²C, RS-485 peripheral interface
  - Pin Viewer for real time monitor the status of all IO pins
  - PinConfigure tool for pin assignment, initial code generation and OrCAD/Protel part generation
  - ClockConfigure tool for generating the initial source code of system clock
- **96-bit Unique ID (UID)**
- **128-bit Unique Customer ID (UCID)**
- **Package**

Pin Count	128	64	48	33	28	20
Type	LQFP	LQFP	LQFP	QFN	TSSOP	TSSOP
I/O Pin	111	55	42	27	23	15
Lead Pitch	0.4	0.4	0.5	0.4	0.65	0.65
Dimensions (nm)	14x14 x1.4	7x7x1. 4	7x7x1. 4	4x4x0. 8	4.4x9.7 x1.0	4.4x6. 5x0.9

Note [1]: M032 series

3 BLOCK DIAGRAM

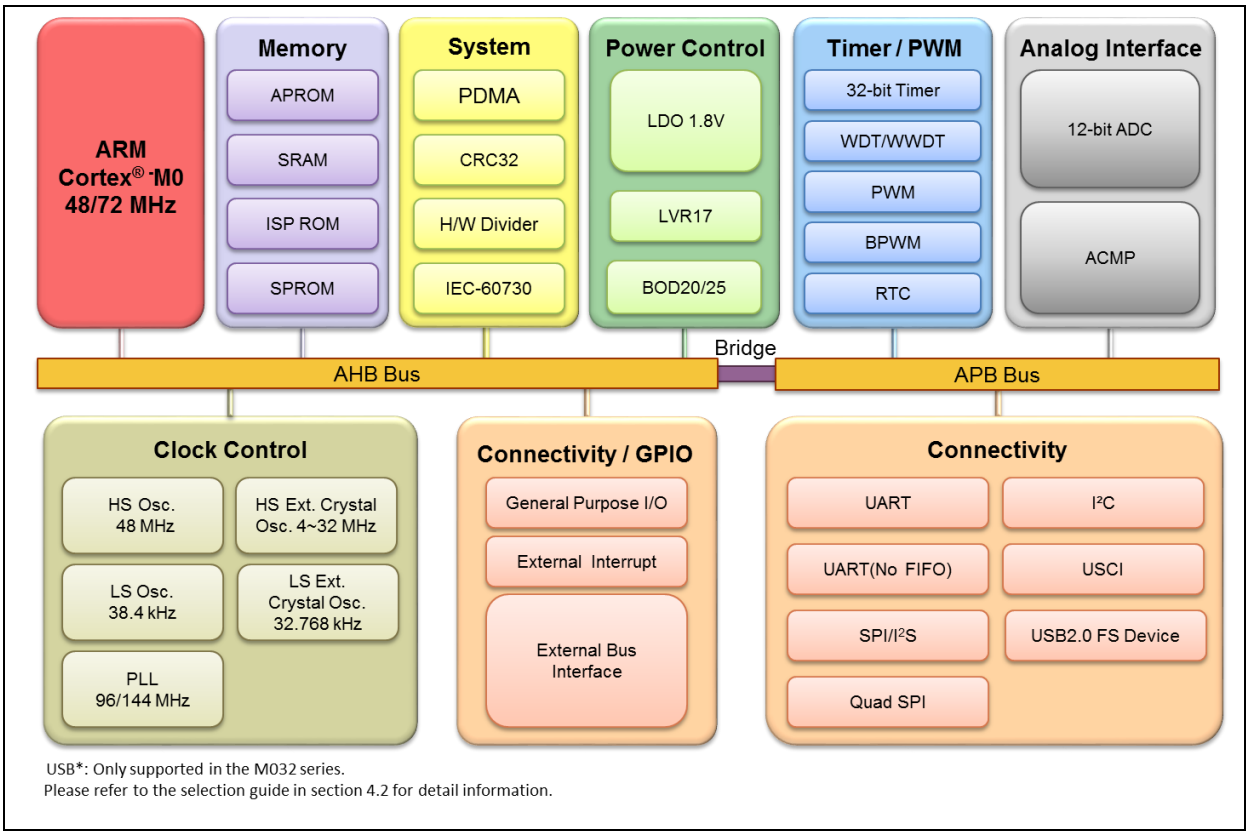

Figure 3-1 NuMicro® M031/M032 Block Diagram

4 PARTS INFORMATION

4.1 M031/M032 Series Naming Rule

M0	31	S	E	3	A	E
Core	**Line**	**Package**	**Flash**	**SRAM**	**Reserve**	**Temperature**
Cortex®-M0	31: Control 32: USB	F: TSSOP20 (4.4x6.5 mm) E: TSSOP28 (4.4x9.7 mm) T: QFN33 (4x4 mm) L: LQFP48 (7x7 mm) S: LQFP64 (7x7 mm) K: LQFP128 (14x14 mm)	B: 16 KB C: 32 KB D: 64 KB E: 128 KB G: 256 KB I: 512 KB	0: 2 KB 1: 4 KB 2: 8/12 KB 3: 16 KB 6: 32 KB 8: 64 KB A: 96 KB		E:-40˚C ~ 105˚C

4.2 M031/M032 Series Selection Guide

4.2.1 M031 Base Series (M031Lx)

Part Number		M031				
		LC2AE	LD2AE	LE3AE	LG6AE	LG8AE
Flash (KB)		32	64	128	256	256
SRAM (KB)		8	8	16	32	64
LDROM (KB)		2	2	4	4	4
SPROM (Bytes)		512	512	512	2048	2048
System Frequency (MHz)		48	48	48	72	72
PLL (MHz)		96	96	96	144	144
I/O		42				
32-bit Timer		4				
Connectivity	USCI	1	1	1	2	2
	UART	3	3	3	6	6
	SPI/I²S	1				
	QSPI	-	-	-	1	1
	I²C/SMBus	2/0	2/0	2/0	2/1	2/1
	USB FS	-	-	-	-	-
PWM		12				
BPWM		-	-	-	12	12
PDMA		5	5	5	7	7
EBI		-	-	√	√	√
CRC		√				
HDIV		√				
IEC-60730		-	-	-	√	√
HXT		√				
LXT		√				
RTC		-	-	-	√	√
Analog Comparator		2				
12-bit SAR ADC		12				
Package		LQFP48				

4.2.2 M031 Base Series (M031Sx)

Part Number		M031					
		SC2AE	SD2AE	SE3AE	SG6AE	SG8AE	SIAAE
Flash (KB)		32	64	128	256	256	512
SRAM (KB)		8	8	16	32	64	96
LDROM (KB)		2	2	4	4	4	8
SPROM (Bytes)		512	512	512	2048	2048	2048
System Frequency (MHz)		48	48	48	72	72	72
PLL (MHz)		96	96	96	144	144	144
I/O		55					
32-bit Timer		4					
Connectivity	USCI	1	1	1	2	2	2
	UART	3	3	3	6	6	8
	SPI/I²S	1					
	QSPI	-	-	-	1	1	1
	I²C/SMBus	2/0	2/0	2/0	2/1	2/1	2/1
	USB FS	-					
PWM		12					
BPWM		-	-	-	12	12	12
PDMA		5	5	5	7	7	9
EBI		-	-	√	√	√	√
CRC		√					
HDIV		√					
IEC-60730		-	-	-	√	√	√
HXT		√					
LXT		√					
RTC		-	-	-	√	√	√
Analog Comparator		2					
12-bit SAR ADC		16					
Package		LQFP64					

4.2.3 M031 Base Series (M031Kx)

Part Number		M031		
		KG6AE	KG8AE	KIAAE
Flash (KB)		256	256	512
SRAM (KB)		32	64	96
LDROM (KB)		4	4	8
SPROM (Bytes)		2048		
System Frequency (MHz)		72		
PLL (MHz)		144		
I/O		111		
32-bit Timer		4		
Connectivity	USCI	2		
	UART	6	6	8
	SPI/I²S	1		
	QSPI	1		
	I²C/SMBus	2/1		
	USB FS	-		
PWM		12		
BPWM		12		
PDMA		7	7	9
EBI		√		
CRC		√		
HDIV		√		
IEC-60730		√		
HXT		√		
LXT		√		
RTC		√		
Analog Comparator		2		
12-bit SAR ADC		16		
Package		LQFP128		

4.2.4 M032 USB Series (M032Fx / M032Ex / M032Tx)

Part Number		M032			
		FC1AE	EC1AE	TC1AE	TD2AE
Flash (KB)		32	32	32	64
SRAM (KB)		4	4	4	8
LDROM (KB)		2			
SPROM (Bytes)		512			
System Frequency (MHz)		48			
PLL (MHz)		-			
I/O		11	19	23	23
32-bit Timer		2	2	2	4
Connectivity	USCI	1	1	1	2
	UART	1			
	SPI/I²S	1			
	QSPI	-	-	-	1
	I²C/SMBus	-			
	USB FS	√			
PWM		-			
BPWM		6	6	6	12
PDMA		-	-	-	5
EBI		-			
CRC		-			
HDIV		-	-	-	√
IEC-60730		-			
HXT		-			
LXT		-			
RTC		-			
Analog Comparator		-			
12-bit SAR ADC		3	9	10	10
Package		TSSOP20	TSSOP28	QFN33	QFN33

4.2.5 M032 USB Series (M032Lx)

Part Number		M032				
		LC2AE	LD2AE	LE3AE	LG6AE	LG8AE
Flash (KB)		32	64	128	256	256
SRAM (KB)		8	8	16	32	64
LDROM (KB)		2	2	4	4	4
SPROM (Bytes)		512	512	512	2048	2048
System Frequency (MHz)		48	48	48	72	72
PLL (MHz)		-	-	96	144	144
I/O		38				
32-bit Timer		4				
Connectivity	USCI	2	2	1	2	2
	UART	1	1	3	6	6
	SPI/I²S	1				
	QSPI	1	1	-	1	1
	I²C/SMBus	-	-	2/0	2/1	2/1
	USB FS	√				
PWM		-	-	12	12	12
BPWM		12	12	-	12	12
PDMA		5	5	5	7	7
EBI		-	-	√	√	√
CRC		-	-	√	√	√
HDIV		√				
IEC-60730		-	-	-	√	√
HXT		-	-	√	√	√
LXT		-	-	√	√	√
RTC		-	-	-	√	√
Analog Comparator		-	-	2	2	2
12-bit SAR ADC		12				
Package		LQFP48				

4.2.6 M032 USB Series (M032Sx)

Part Number		M032			
		SE3AE	SG6AE	SG8AE	SIAAE
Flash (KB)		128	256	256	512
SRAM (KB)		16	32	64	96
LDROM (KB)		4	4	4	8
SPROM (Bytes)		512	2048	2048	2048
System Frequency (MHz)		48	72	72	72
PLL (MHz)		96	144	144	144
I/O		51			
32-bit Timer		4			
Connectivity	USCI	1	2	2	2
	UART	3	6	6	8
	SPI/I²S	1			
	QSPI	-	1	1	1
	I²C/SMBus	2/0	2/1	2/1	2/1
	USB FS	√			
PWM		12			
BPWM		-	12	12	12
PDMA		5	7	7	9
EBI		√			
CRC		√			
HDIV		√			
IEC-60730		-	√	√	√
HXT		√			
LXT		√			
RTC		-	√	√	√
Analog Comparator		2			
12-bit SAR ADC		16			
Package		LQFP64			

4.2.7 M032 USB Series (M032Kx)

Part Number		M032		
		KG6AE	KG8AE	KIAAE
Flash (KB)		256	256	512
SRAM (KB)		32	64	96
LDROM (KB)		4	4	8
SPROM (Bytes)		2048		
System Frequency (MHz)		72		
PLL (MHz)		144		
I/O		107		
32-bit Timer		4		
Connectivity	USCI	2		
	UART	6	6	8
	SPI/I²S	1		
	QSPI	1		
	I²C/SMBus	2/1		
	USB FS	√		
PWM		12		
BPWM		12		
PDMA		7	7	9
EBI		√		
CRC		√		
HDIV		√		
IEC-60730		√		
HXT		√		
LXT		√		
RTC		√		
Analog Comparator		2		
12-bit SAR ADC		16		
Package		LQFP128		

4.2.8 Naming Rule

M0	32	K	I	A	A	E
Core	**Line**	**Package**	**Flash**	**SRAM**	**Reserve**	**Temperature**
Cortex®-M0	31: Base 32: USB	F: TSSOP20 (4.4x6.5 mm) E: TSSOP28 (4.4x9.7 mm) T: QFN33 (4x4 mm) L: LQFP48 (7x7 mm) S: LQFP64 (7x7 mm) K: LQFP128 (14x14 mm)	B: 16 KB C: 32 KB D: 64 KB E: 128 KB G: 256 KB I: 512 KB	0: 2 KB 1: 4 KB 2: 8/12 KB 3: 16 KB 6: 32 KB 8: 64 KB A: 96 KB		E:-40°C ~ 105°C

5 PIN CONFIGURATION

Users can find pin configuaration informations in chapter 5 or by using NuTool - PinConfig. The NuTool - PinConfigure contains all Nuvoton NuMicro® Family chip series with all part number, and helps users configure GPIO multi-function correctly and handily.

5.1 Pin Configuration

5.1.1 M031 Series Pin Diagram

5.1.1.1 M031 Series TSSOP 20-Pin Diagram

Corresponding Part Number: M031FB0AE, M031FC1AE

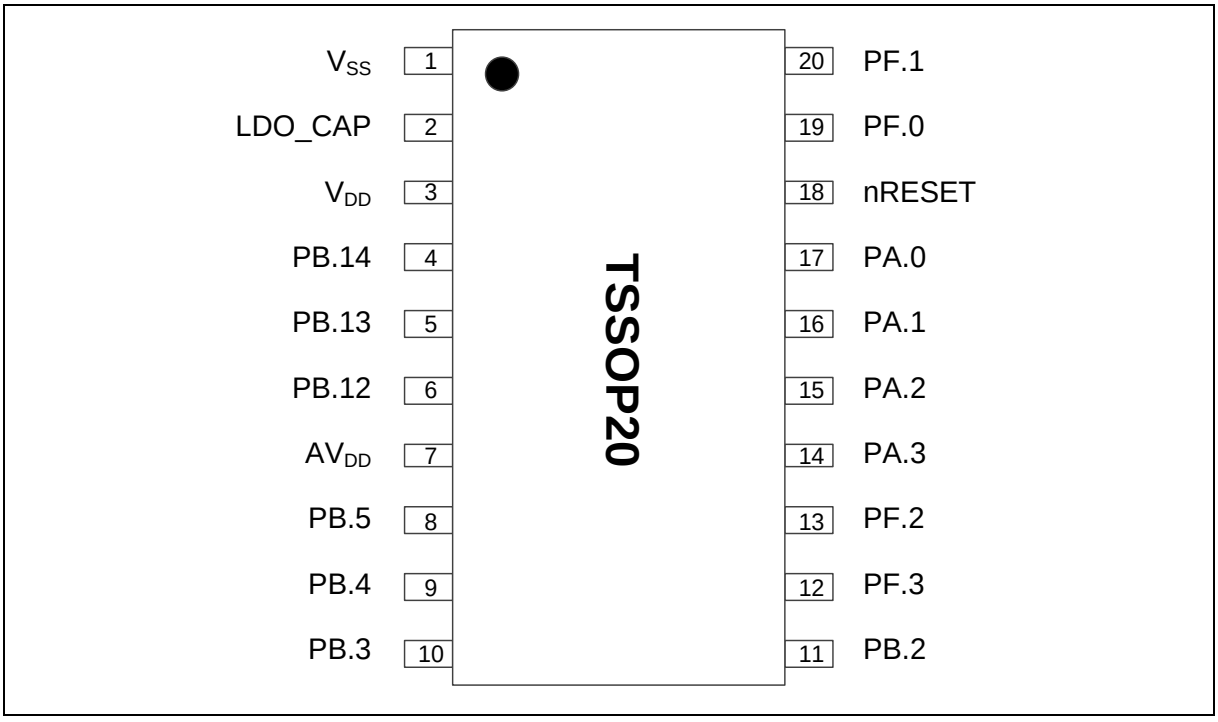

Figure 5.1-1 M031 Series TSSOP 20-pin Diagram

5.1.1.2 M031 Series TSSOP 28-Pin Diagram

Corresponding Part Number: M031EB0AE, M031EC1AE

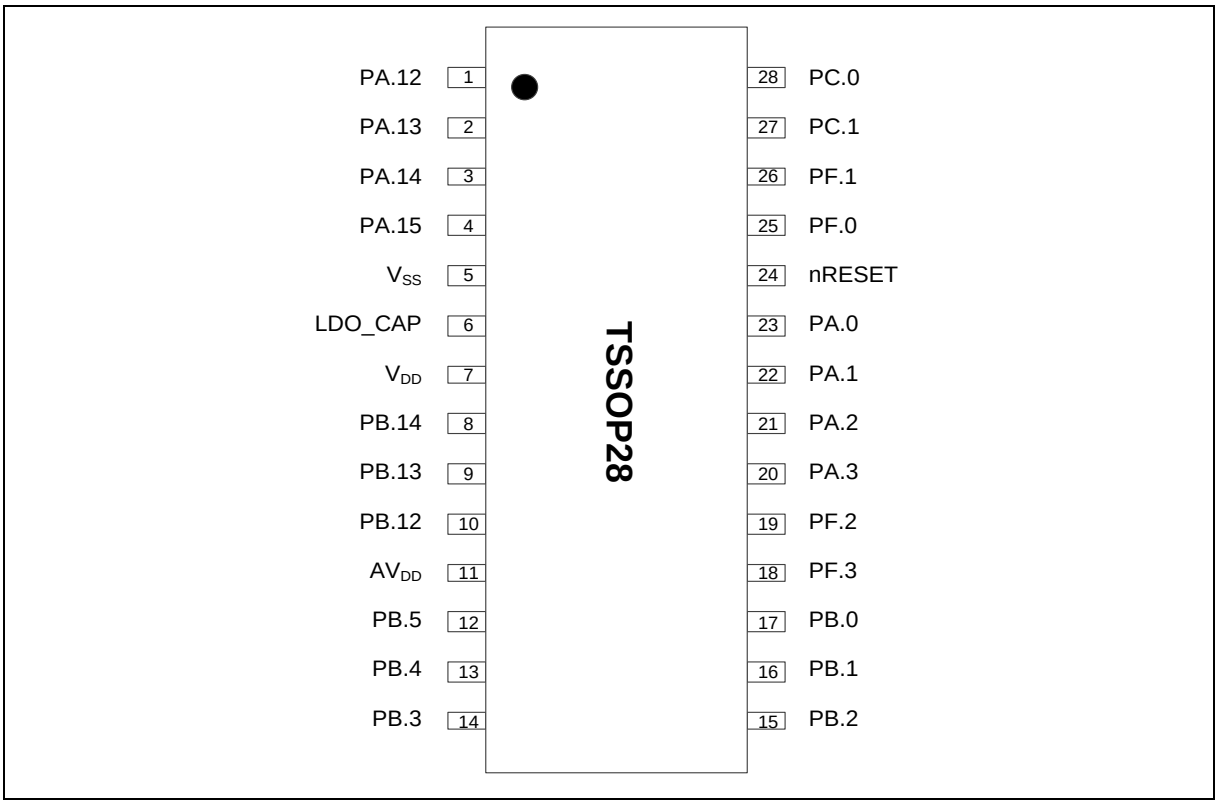

Figure 5.1-2 M031 Series TSSOP 28-pin Diagram

5.1.1.3 M031 Series QFN 33-Pin Diagram

Corresponding Part Number: M031TB0AE, M031TC1AE, M031TD2AE

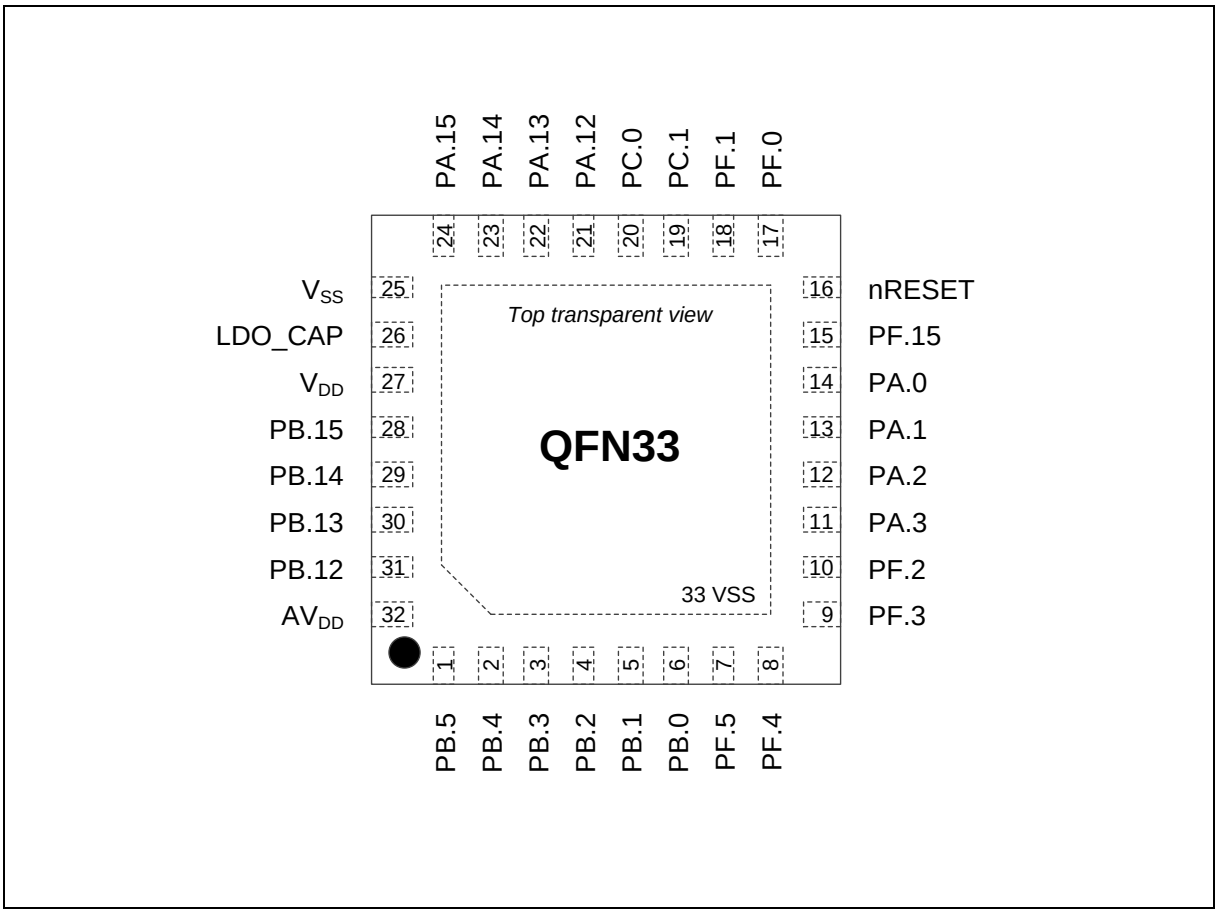

Figure 5.1-3 M031 Series QFN 33-pin Diagram

5.1.1.4 M031 Series LQFP 48-Pin Diagram

Corresponding Part Number: M031LC2AE, M031LD2AE, M031LE3AE, M031LG6AE, M031LG8AE

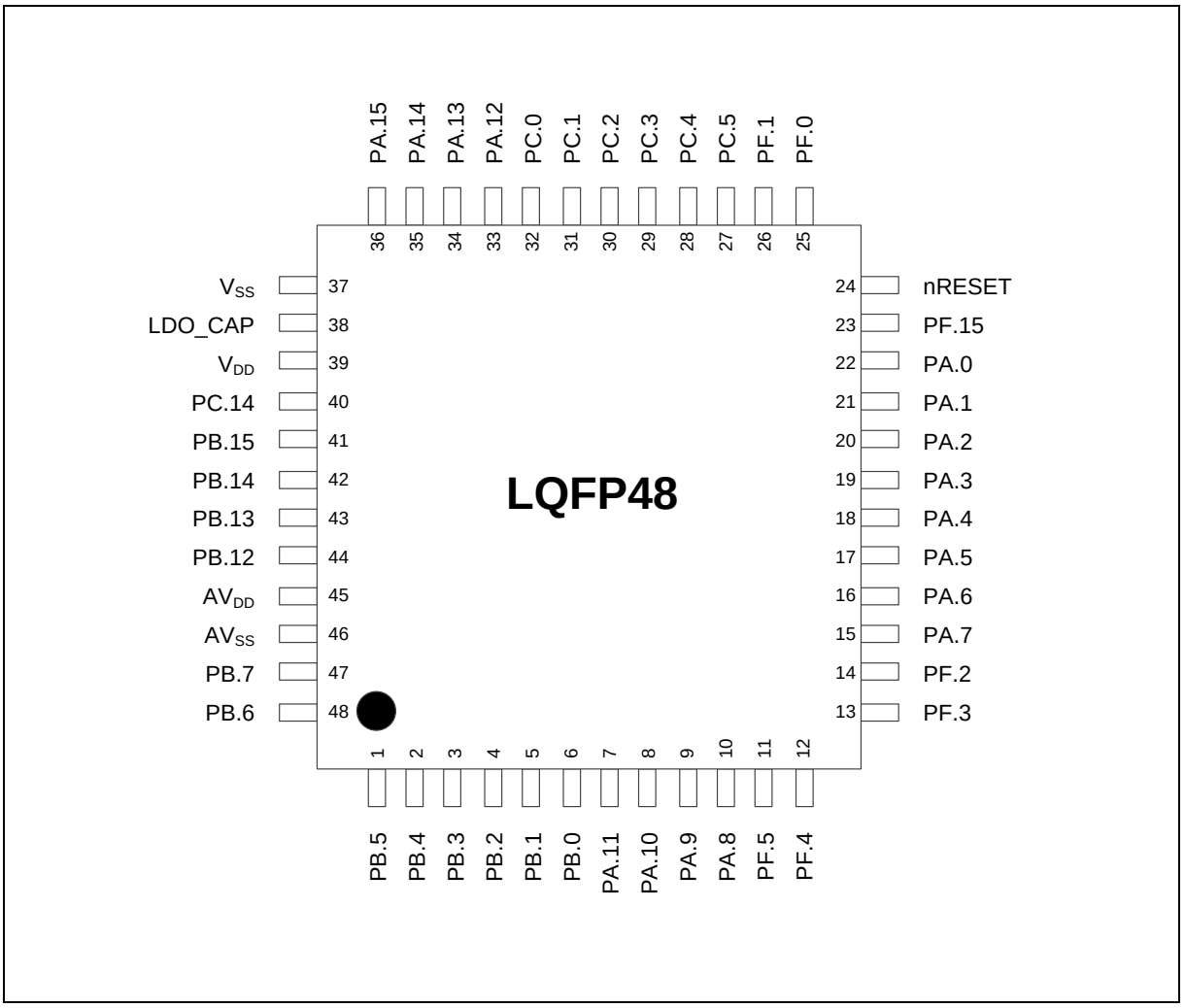

Figure 5.1-4 M031 Series LQFP 48-pin Diagram

5.1.1.5 M031 Series LQFP 64-Pin Diagram

Corresponding Part Number: M031SC2AE, M031SD2AE, M031SE3AE, M031SG6AE, M031SG8AE, M031SIAAE

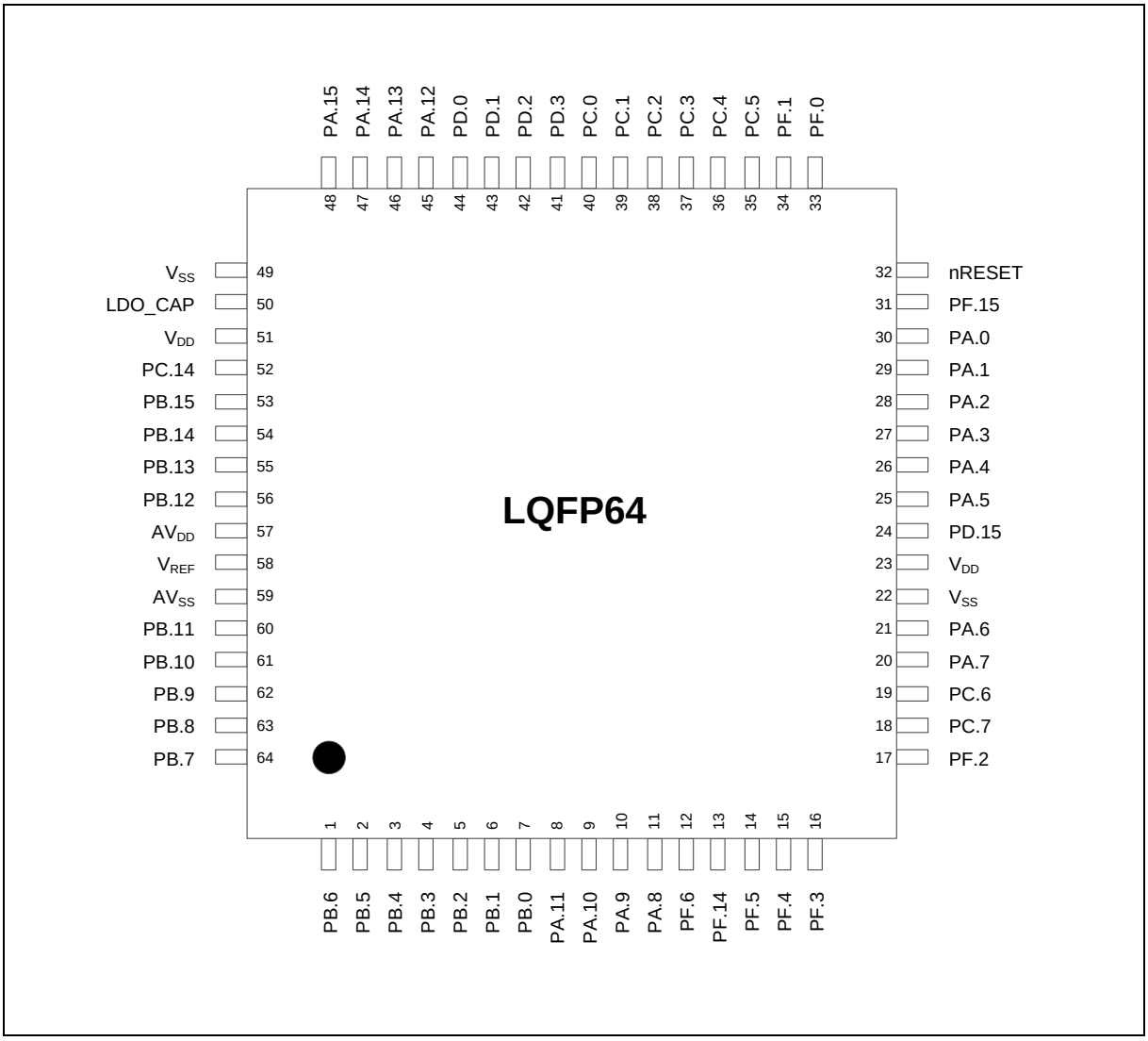

Figure 5.1-5 M031 Series LQFP 64-pin Diagram

5.1.1.6 M031 Series LQFP 128-Pin Diagram

Corresponding Part Number: M031KG6AE, M031KG8AE, M031KIAAE

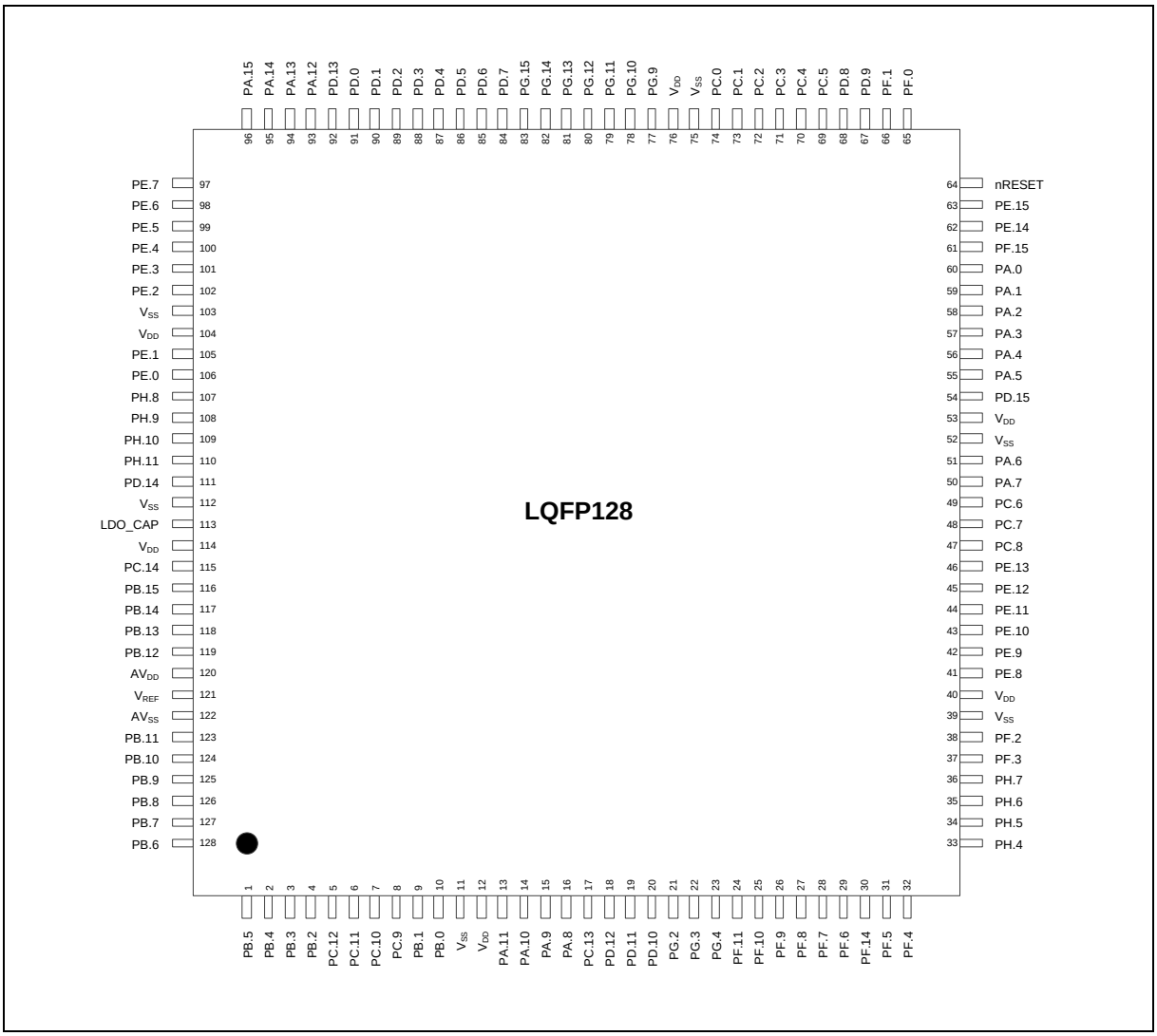

Figure 5.1-6 M031 Series LQFP 128-pin Diagram

5.1.2 M031 Series Multi-function Pin Diagram

5.1.2.1 M031 Series TSSOP 20-Pin Multi-function Pin Diagram

Corresponding Part Number: M031FB0AE, M031FC1AE

M031FB0AE

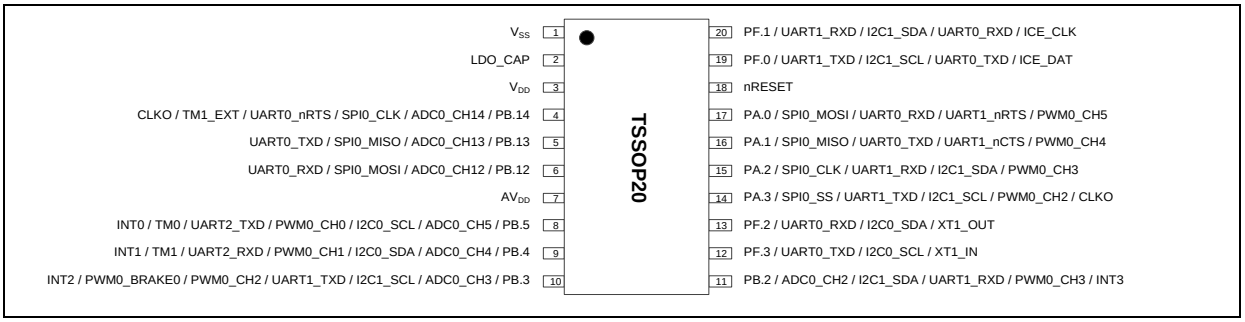

Figure 5.1-7 M031FB0AE Multi-function Pin Diagram

Pin	M031FB0AE Pin Function
1	VSS
2	LDO_CAP
3	V_{DD}
4	PB.14 / ADC0_CH14 / SPI0_CLK / UART0_nRTS / TM1_EXT / CLKO
5	PB.13 / ADC0_CH13 / SPI0_MISO / UART0_TXD
6	PB.12 / ADC0_CH12 / SPI0_MOSI / UART0_RXD
7	AV_{DD}
8	PB.5 / ADC0_CH5 / I2C0_SCL / PWM0_CH0 / UART2_TXD / TM0 / INT0
9	PB.4 / ADC0_CH4 / I2C0_SDA / PWM0_CH1 / UART2_RXD / TM1 / INT1
10	PB.3 / ADC0_CH3 / I2C1_SCL / UART1_TXD / PWM0_CH2 / PWM0_BRAKE0 / INT2
11	PB.2 / ADC0_CH2 / I2C1_SDA / UART1_RXD / PWM0_CH3 / INT3
12	PF.3 / UART0_TXD / I2C0_SCL / XT1_IN
13	PF.2 / UART0_RXD / I2C0_SDA / XT1_OUT
14	PA.3 / SPI0_SS / UART1_TXD / I2C1_SCL / PWM0_CH2 / CLKO
15	PA.2 / SPI0_CLK / UART1_RXD / I2C1_SDA / PWM0_CH3
16	PA.1 / SPI0_MISO / UART0_TXD / UART1_nCTS / PWM0_CH4
17	PA.0 / SPI0_MOSI / UART0_RXD / UART1_nRTS / PWM0_CH5
18	nRESET
19	PF.0 / UART1_TXD / I2C1_SCL / UART0_TXD / ICE_DAT
20	PF.1 / UART1_RXD / I2C1_SDA / UART0_RXD / ICE_CLK

Table 5.1-1 M031FB0AE Multi-function Pin Table

M031FC1AE

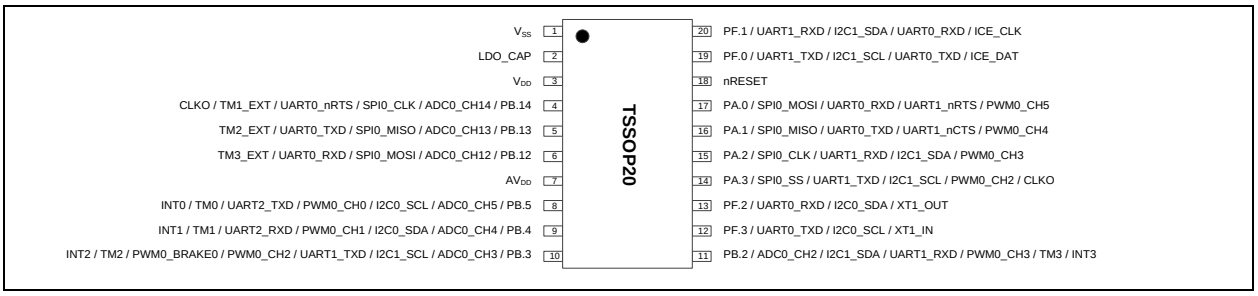

Figure 5.1-8 M031FC1AE Multi-function Pin Diagram

Pin	M031FC1AE Pin Function
1	VSS
2	LDO_CAP
3	V_{DD}
4	PB.14 / ADC0_CH14 / SPI0_CLK / UART0_nRTS / TM1_EXT / CLKO
5	PB.13 / ADC0_CH13 / SPI0_MISO / UART0_TXD / TM2_EXT
6	PB.12 / ADC0_CH12 / SPI0_MOSI / UART0_RXD / TM3_EXT
7	AV_{DD}
8	PB.5 / ADC0_CH5 / I2C0_SCL / PWM0_CH0 / UART2_TXD / TM0 / INT0
9	PB.4 / ADC0_CH4 / I2C0_SDA / PWM0_CH1 / UART2_RXD / TM1 / INT1
10	PB.3 / ADC0_CH3 / I2C1_SCL / UART1_TXD / PWM0_CH2 / PWM0_BRAKE0 / TM2 / INT2
11	PB.2 / ADC0_CH2 / I2C1_SDA / UART1_RXD / PWM0_CH3 / TM3 / INT3
12	PF.3 / UART0_TXD / I2C0_SCL / XT1_IN
13	PF.2 / UART0_RXD / I2C0_SDA / XT1_OUT
14	PA.3 / SPI0_SS / UART1_TXD / I2C1_SCL / PWM0_CH2 / CLKO
15	PA.2 / SPI0_CLK / UART1_RXD / I2C1_SDA / PWM0_CH3
16	PA.1 / SPI0_MISO / UART0_TXD / UART1_nCTS / PWM0_CH4
17	PA.0 / SPI0_MOSI / UART0_RXD / UART1_nRTS / PWM0_CH5
18	nRESET
19	PF.0 / UART1_TXD / I2C1_SCL / UART0_TXD / ICE_DAT
20	PF.1 / UART1_RXD / I2C1_SDA / UART0_RXD / ICE_CLK

Table 5.1-2 M031FC1AE Multi-function Pin Table

5.1.2.2 M031 Series TSSOP 28-Pin Multi-function Pin Diagram

Corresponding Part Number: M031EB0AE, M031EC1AE

M031EB0AE

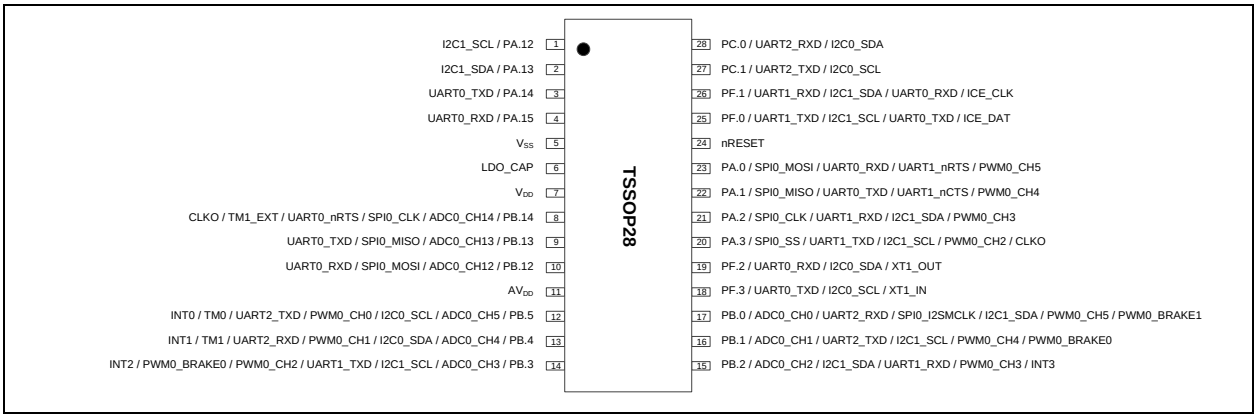

Figure 5.1-9 M031EB0AE Multi-function Pin Diagram

Pin	M031EB0AE Pin Function
1	PA.12 / I2C1_SCL
2	PA.13 / I2C1_SDA
3	PA.14 / UART0_TXD
4	PA.15 / UART0_RXD
5	VSS
6	LDO_CAP
7	V_{DD}
8	PB.14 / ADC0_CH14 / SPI0_CLK / UART0_nRTS / TM1_EXT / CLKO
9	PB.13 / ADC0_CH13 / SPI0_MISO / UART0_TXD
10	PB.12 / ADC0_CH12 / SPI0_MOSI / UART0_RXD
11	AV_{DD}
12	PB.5 / ADC0_CH5 / I2C0_SCL / PWM0_CH0 / UART2_TXD / TM0 / INT0
13	PB.4 / ADC0_CH4 / I2C0_SDA / PWM0_CH1 / UART2_RXD / TM1 / INT1
14	PB.3 / ADC0_CH3 / I2C1_SCL / UART1_TXD / PWM0_CH2 / PWM0_BRAKE0 / INT2
15	PB.2 / ADC0_CH2 / I2C1_SDA / UART1_RXD / PWM0_CH3 / INT3
16	PB.1 / ADC0_CH1 / UART2_TXD / I2C1_SCL / PWM0_CH4 / PWM0_BRAKE0
17	PB.0 / ADC0_CH0 / UART2_RXD / SPI0_I2SMCLK / I2C1_SDA / PWM0_CH5 / PWM0_BRAKE1
18	PF.3 / UART0_TXD / I2C0_SCL / XT1_IN
19	PF.2 / UART0_RXD / I2C0_SDA / XT1_OUT
20	PA.3 / SPI0_SS / UART1_TXD / I2C1_SCL / PWM0_CH2 / CLKO
21	PA.2 / SPI0_CLK / UART1_RXD / I2C1_SDA / PWM0_CH3

Pin	M031EB0AE Pin Function
22	PA.1 / SPI0_MISO / UART0_TXD / UART1_nCTS / PWM0_CH4
23	PA.0 / SPI0_MOSI / UART0_RXD / UART1_nRTS / PWM0_CH5
24	nRESET
25	PF.0 / UART1_TXD / I2C1_SCL / UART0_TXD / ICE_DAT
26	PF.1 / UART1_RXD / I2C1_SDA / UART0_RXD / ICE_CLK
27	PC.1 / UART2_TXD / I2C0_SCL
28	PC.0 / UART2_RXD / I2C0_SDA

Table 5.1-3 M031EB0AE Multi-function Pin Table

M031EC1AE

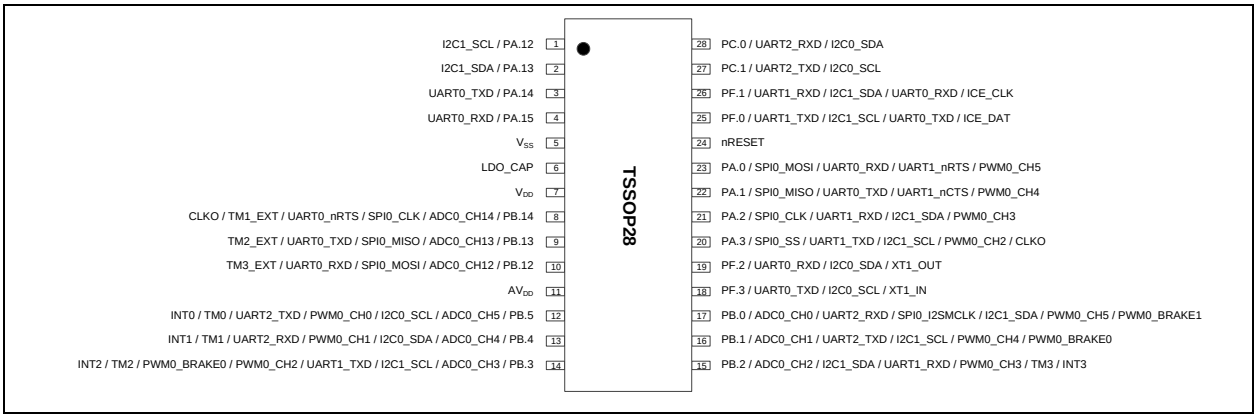

Figure 5.1-10 M031EC1AE Multi-function Pin Diagram

Pin	M031EC1AE Pin Function
1	PA.12 / I2C1_SCL
2	PA.13 / I2C1_SDA
3	PA.14 / UART0_TXD
4	PA.15 / UART0_RXD
5	VSS
6	LDO_CAP
7	V_{DD}
8	PB.14 / ADC0_CH14 / SPI0_CLK / UART0_nRTS / TM1_EXT / CLKO
9	PB.13 / ADC0_CH13 / SPI0_MISO / UART0_TXD / TM2_EXT
10	PB.12 / ADC0_CH12 / SPI0_MOSI / UART0_RXD / TM3_EXT
11	AV_{DD}
12	PB.5 / ADC0_CH5 / I2C0_SCL / PWM0_CH0 / UART2_TXD / TM0 / INT0
13	PB.4 / ADC0_CH4 / I2C0_SDA / PWM0_CH1 / UART2_RXD / TM1 / INT1

Pin	M031EC1AE Pin Function
14	PB.3 / ADC0_CH3 / I2C1_SCL / UART1_TXD / PWM0_CH2 / PWM0_BRAKE0 / TM2 / INT2
15	PB.2 / ADC0_CH2 / I2C1_SDA / UART1_RXD / PWM0_CH3 / TM3 / INT3
16	PB.1 / ADC0_CH1 / UART2_TXD / I2C1_SCL / PWM0_CH4 / PWM0_BRAKE0
17	PB.0 / ADC0_CH0 / UART2_RXD / SPI0_I2SMCLK / I2C1_SDA / PWM0_CH5 / PWM0_BRAKE1
18	PF.3 / UART0_TXD / I2C0_SCL / XT1_IN
19	PF.2 / UART0_RXD / I2C0_SDA / XT1_OUT
20	PA.3 / SPI0_SS / UART1_TXD / I2C1_SCL / PWM0_CH2 / CLKO
21	PA.2 / SPI0_CLK / UART1_RXD / I2C1_SDA / PWM0_CH3
22	PA.1 / SPI0_MISO / UART0_TXD / UART1_nCTS / PWM0_CH4
23	PA.0 / SPI0_MOSI / UART0_RXD / UART1_nRTS / PWM0_CH5
24	nRESET
25	PF.0 / UART1_TXD / I2C1_SCL / UART0_TXD / ICE_DAT
26	PF.1 / UART1_RXD / I2C1_SDA / UART0_RXD / ICE_CLK
27	PC.1 / UART2_TXD / I2C0_SCL
28	PC.0 / UART2_RXD / I2C0_SDA

Table 5.1-4 M031EC1AE Multi-function Pin Table

5.1.2.3 M031 Series QFN 33-Pin Multi-function Pin Diagram

Corresponding Part Number: M031TB0AE, M031TC1AE, M031TD2AE

M031TB0AE

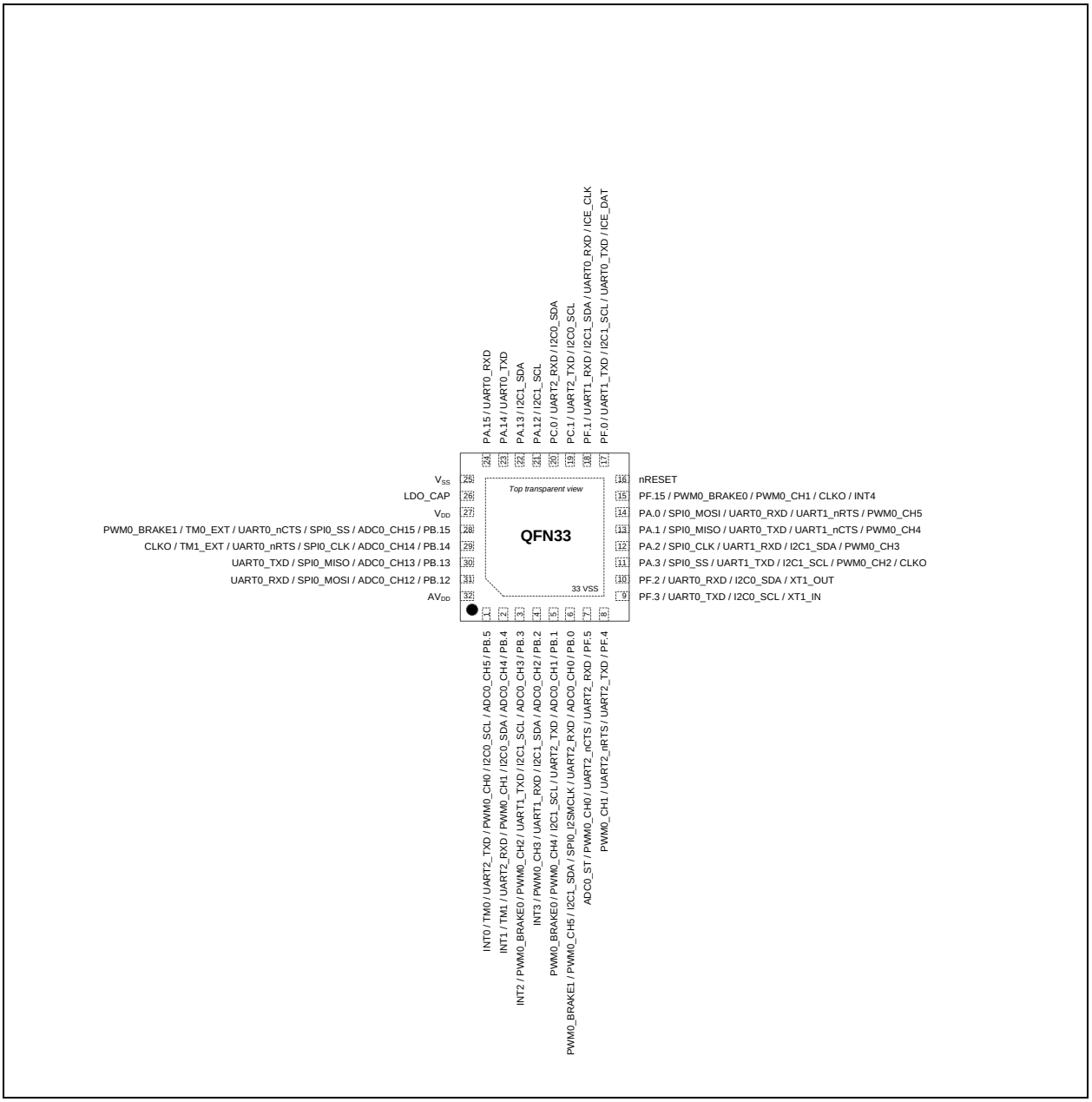

Figure 5.1-11 M031TB0AE Multi-function Pin Diagram

Pin	M031TB0AE Pin Function
1	PB.5 / ADC0_CH5 / I2C0_SCL / PWM0_CH0 / UART2_TXD / TM0 / INT0
2	PB.4 / ADC0_CH4 / I2C0_SDA / PWM0_CH1 / UART2_RXD / TM1 / INT1
3	PB.3 / ADC0_CH3 / I2C1_SCL / UART1_TXD / PWM0_CH2 / PWM0_BRAKE0 / INT2

Pin	M031TB0AE Pin Function
4	PB.2 / ADC0_CH2 / I2C1_SDA / UART1_RXD / PWM0_CH3 / INT3
5	PB.1 / ADC0_CH1 / UART2_TXD / I2C1_SCL / PWM0_CH4 / PWM0_BRAKE0
6	PB.0 / ADC0_CH0 / UART2_RXD / SPI0_I2SMCLK / I2C1_SDA / PWM0_CH5 / PWM0_BRAKE1
7	PF.5 / UART2_RXD / UART2_nCTS / PWM0_CH0 / ADC0_ST
8	PF.4 / UART2_TXD / UART2_nRTS / PWM0_CH1
9	PF.3 / UART0_TXD / I2C0_SCL / XT1_IN
10	PF.2 / UART0_RXD / I2C0_SDA / XT1_OUT
11	PA.3 / SPI0_SS / UART1_TXD / I2C1_SCL / PWM0_CH2 / CLKO
12	PA.2 / SPI0_CLK / UART1_RXD / I2C1_SDA / PWM0_CH3
13	PA.1 / SPI0_MISO / UART0_TXD / UART1_nCTS / PWM0_CH4
14	PA.0 / SPI0_MOSI / UART0_RXD / UART1_nRTS / PWM0_CH5
15	PF.15 / PWM0_BRAKE0 / PWM0_CH1 / CLKO / INT4
16	nRESET
17	PF.0 / UART1_TXD / I2C1_SCL / UART0_TXD / ICE_DAT
18	PF.1 / UART1_RXD / I2C1_SDA / UART0_RXD / ICE_CLK
19	PC.1 / UART2_TXD / I2C0_SCL
20	PC.0 / UART2_RXD / I2C0_SDA
21	PA.12 / I2C1_SCL
22	PA.13 / I2C1_SDA
23	PA.14 / UART0_TXD
24	PA.15 / UART0_RXD
25	VSS
26	LDO_CAP
27	V_{DD}
28	PB.15 / ADC0_CH15 / SPI0_SS / UART0_nCTS / TM0_EXT / PWM0_BRAKE1
29	PB.14 / ADC0_CH14 / SPI0_CLK / UART0_nRTS / TM1_EXT / CLKO
30	PB.13 / ADC0_CH13 / SPI0_MISO / UART0_TXD
31	PB.12 / ADC0_CH12 / SPI0_MOSI / UART0_RXD
32	AV_{DD}

Table 5.1-5 M031TB0AE Multi-function Pin Table

M031TC1AE

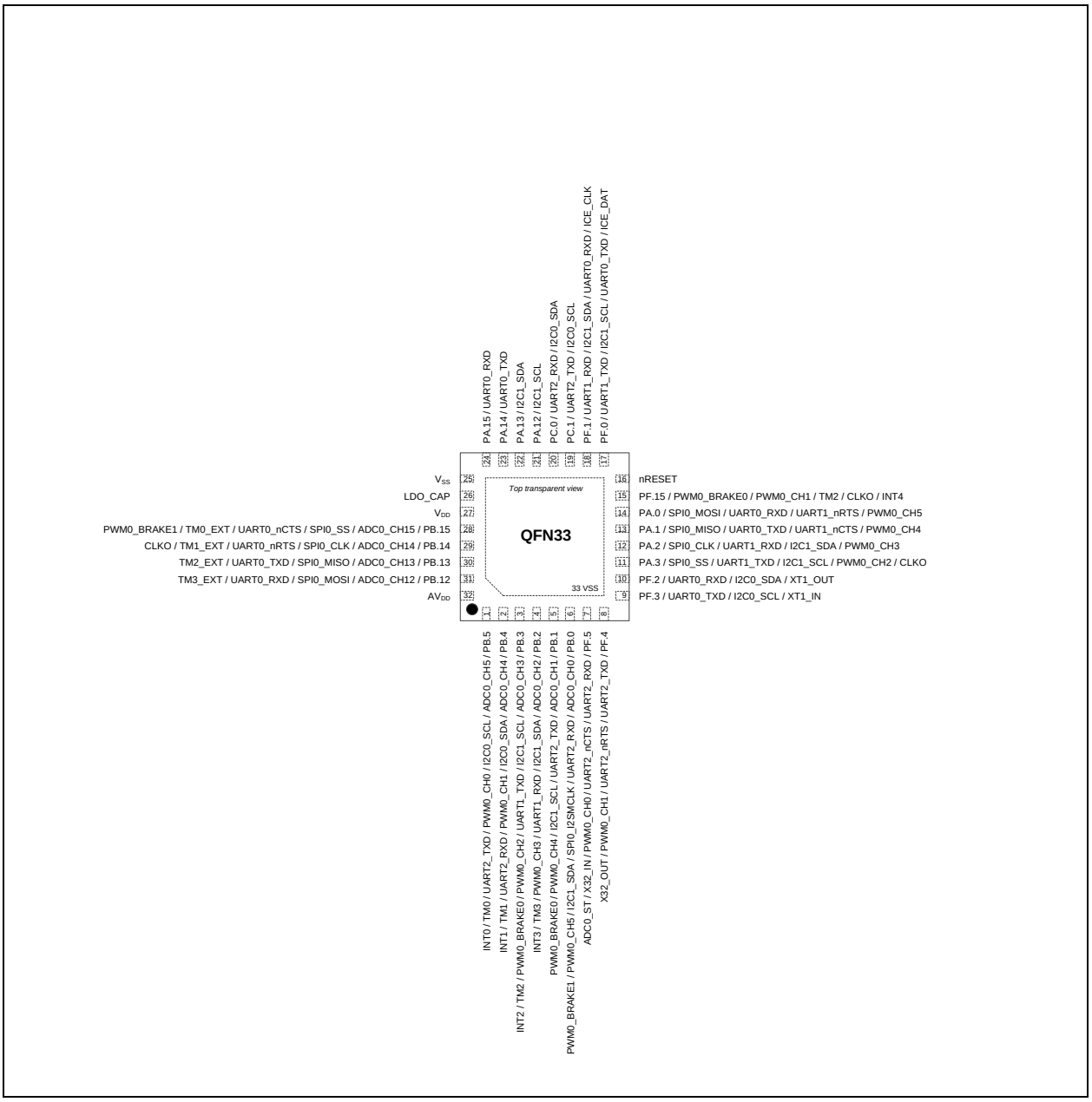

Figure 5.1-12 M031TC1AE Multi-function Pin Diagram

Pin	M031TC1AE Pin Function
1	PB.5 / ADC0_CH5 / I2C0_SCL / PWM0_CH0 / UART2_TXD / TM0 / INT0
2	PB.4 / ADC0_CH4 / I2C0_SDA / PWM0_CH1 / UART2_RXD / TM1 / INT1
3	PB.3 / ADC0_CH3 / I2C1_SCL / UART1_TXD / PWM0_CH2 / PWM0_BRAKE0 / TM2 / INT2
4	PB.2 / ADC0_CH2 / I2C1_SDA / UART1_RXD / PWM0_CH3 / TM3 / INT3

Pin	M031TC1AE Pin Function
5	PB.1 / ADC0_CH1 / UART2_TXD / I2C1_SCL / PWM0_CH4 / PWM0_BRAKE0
6	PB.0 / ADC0_CH0 / UART2_RXD / SPI0_I2SMCLK / I2C1_SDA / PWM0_CH5 / PWM0_BRAKE1
7	PF.5 / UART2_RXD / UART2_nCTS / PWM0_CH0 / X32_IN / ADC0_ST
8	PF.4 / UART2_TXD / UART2_nRTS / PWM0_CH1 / X32_OUT
9	PF.3 / UART0_TXD / I2C0_SCL / XT1_IN
10	PF.2 / UART0_RXD / I2C0_SDA / XT1_OUT
11	PA.3 / SPI0_SS / UART1_TXD / I2C1_SCL / PWM0_CH2 / CLKO
12	PA.2 / SPI0_CLK / UART1_RXD / I2C1_SDA / PWM0_CH3
13	PA.1 / SPI0_MISO / UART0_TXD / UART1_nCTS / PWM0_CH4
14	PA.0 / SPI0_MOSI / UART0_RXD / UART1_nRTS / PWM0_CH5
15	PF.15 / PWM0_BRAKE0 / PWM0_CH1 / TM2 / CLKO / INT4
16	nRESET
17	PF.0 / UART1_TXD / I2C1_SCL / UART0_TXD / ICE_DAT
18	PF.1 / UART1_RXD / I2C1_SDA / UART0_RXD / ICE_CLK
19	PC.1 / UART2_TXD / I2C0_SCL
20	PC.0 / UART2_RXD / I2C0_SDA
21	PA.12 / I2C1_SCL
22	PA.13 / I2C1_SDA
23	PA.14 / UART0_TXD
24	PA.15 / UART0_RXD
25	VSS
26	LDO_CAP
27	V_{DD}
28	PB.15 / ADC0_CH15 / SPI0_SS / UART0_nCTS / TM0_EXT / PWM0_BRAKE1
29	PB.14 / ADC0_CH14 / SPI0_CLK / UART0_nRTS / TM1_EXT / CLKO
30	PB.13 / ADC0_CH13 / SPI0_MISO / UART0_TXD / TM2_EXT
31	PB.12 / ADC0_CH12 / SPI0_MOSI / UART0_RXD / TM3_EXT
32	AV_{DD}

Table 5.1-6 M031TC1AE Multi-function Pin Table

M031TD2AE

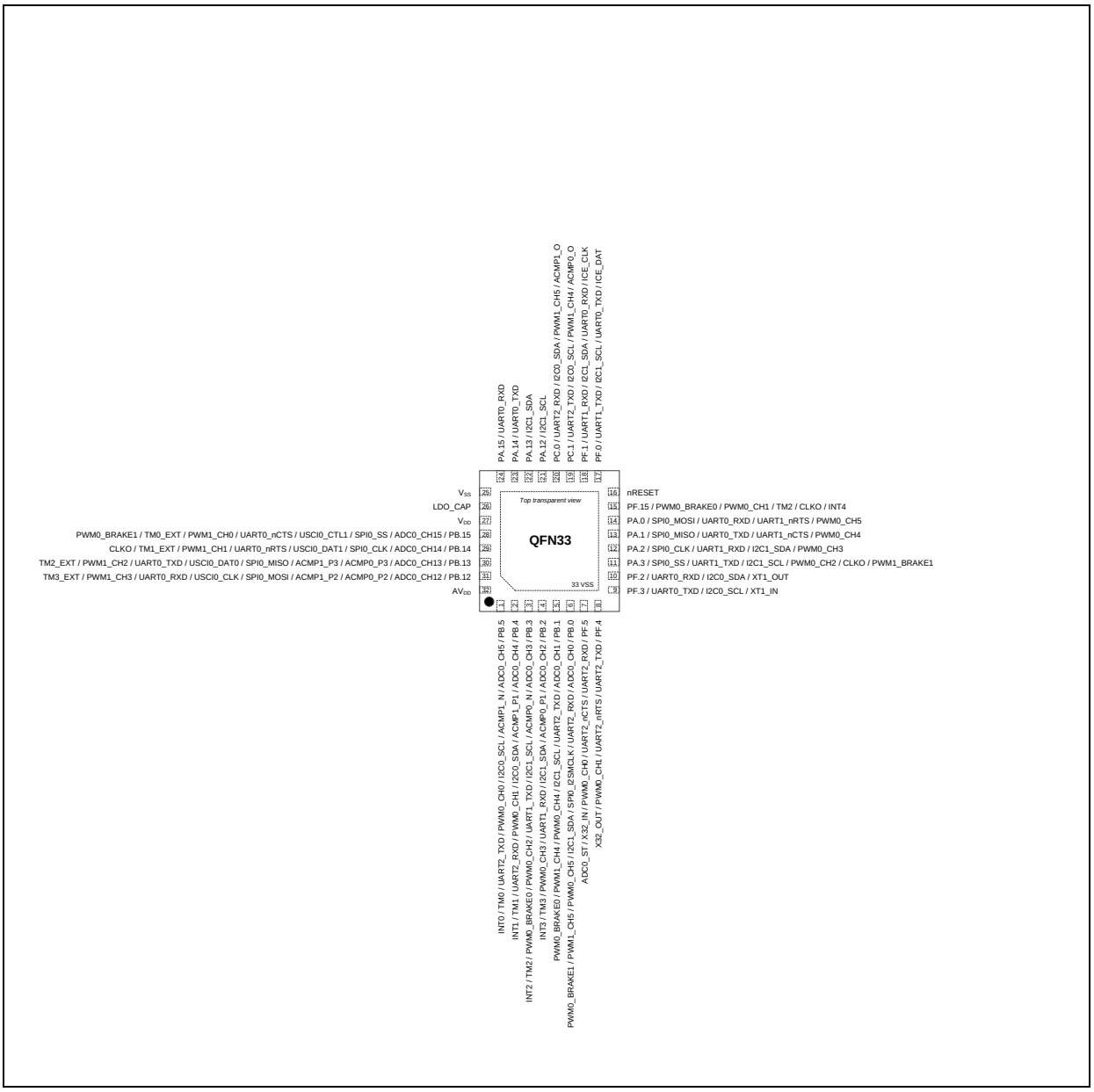

Figure 5.1-13 M031TD2AE Multi-function Pin Diagram

Pin	M031TD2AE Pin Function
1	PB.5 / ADC0_CH5 / ACMP1_N / I2C0_SCL / PWM0_CH0 / UART2_TXD / TM0 / INT0
2	PB.4 / ADC0_CH4 / ACMP1_P1 / I2C0_SDA / PWM0_CH1 / UART2_RXD / TM1 / INT1
3	PB.3 / ADC0_CH3 / ACMP0_N / I2C1_SCL / UART1_TXD / PWM0_CH2 / PWM0_BRAKE0 / TM2 / INT2
4	PB.2 / ADC0_CH2 / ACMP0_P1 / I2C1_SDA / UART1_RXD / PWM0_CH3 / TM3 / INT3
5	PB.1 / ADC0_CH1 / UART2_TXD / I2C1_SCL / PWM0_CH4 / PWM1_CH4 / PWM0_BRAKE0
6	PB.0 / ADC0_CH0 / UART2_RXD / SPI0_I2SMCLK / I2C1_SDA / PWM0_CH5 / PWM1_CH5 / PWM0_BRAKE1

Pin	M031TD2AE Pin Function
7	PF.5 / UART2_RXD / UART2_nCTS / PWM0_CH0 / X32_IN / ADC0_ST
8	PF.4 / UART2_TXD / UART2_nRTS / PWM0_CH1 / X32_OUT
9	PF.3 / UART0_TXD / I2C0_SCL / XT1_IN
10	PF.2 / UART0_RXD / I2C0_SDA / XT1_OUT
11	PA.3 / SPI0_SS / UART1_TXD / I2C1_SCL / PWM0_CH2 / CLKO / PWM1_BRAKE1
12	PA.2 / SPI0_CLK / UART1_RXD / I2C1_SDA / PWM0_CH3
13	PA.1 / SPI0_MISO / UART0_TXD / UART1_nCTS / PWM0_CH4
14	PA.0 / SPI0_MOSI / UART0_RXD / UART1_nRTS / PWM0_CH5
15	PF.15 / PWM0_BRAKE0 / PWM0_CH1 / TM2 / CLKO / INT4
16	nRESET
17	PF.0 / UART1_TXD / I2C1_SCL / UART0_TXD / ICE_DAT
18	PF.1 / UART1_RXD / I2C1_SDA / UART0_RXD / ICE_CLK
19	PC.1 / UART2_TXD / I2C0_SCL / PWM1_CH4 / ACMP0_O
20	PC.0 / UART2_RXD / I2C0_SDA / PWM1_CH5 / ACMP1_O
21	PA.12 / I2C1_SCL
22	PA.13 / I2C1_SDA
23	PA.14 / UART0_TXD
24	PA.15 / UART0_RXD
25	VSS
26	LDO_CAP
27	V_{DD}
28	PB.15 / ADC0_CH15 / SPI0_SS / USCI0_CTL1 / UART0_nCTS / PWM1_CH0 / TM0_EXT / PWM0_BRAKE1
29	PB.14 / ADC0_CH14 / SPI0_CLK / USCI0_DAT1 / UART0_nRTS / PWM1_CH1 / TM1_EXT / CLKO
30	PB.13 / ADC0_CH13 / ACMP0_P3 / ACMP1_P3 / SPI0_MISO / USCI0_DAT0 / UART0_TXD / PWM1_CH2 / TM2_EXT
31	PB.12 / ADC0_CH12 / ACMP0_P2 / ACMP1_P2 / SPI0_MOSI / USCI0_CLK / UART0_RXD / PWM1_CH3 / TM3_EXT
32	AV_{DD}

Table 5.1-7 M031TD2AE Multi-function Pin Table

5.1.2.4 M031 Series LQFP 48-Pin Multi-function Pin Diagram

Corresponding Part Number: M031LC2AE, M031LD2AE, M031LE3AE, M031LG6AE, M031LG8AE

M031LC2AE

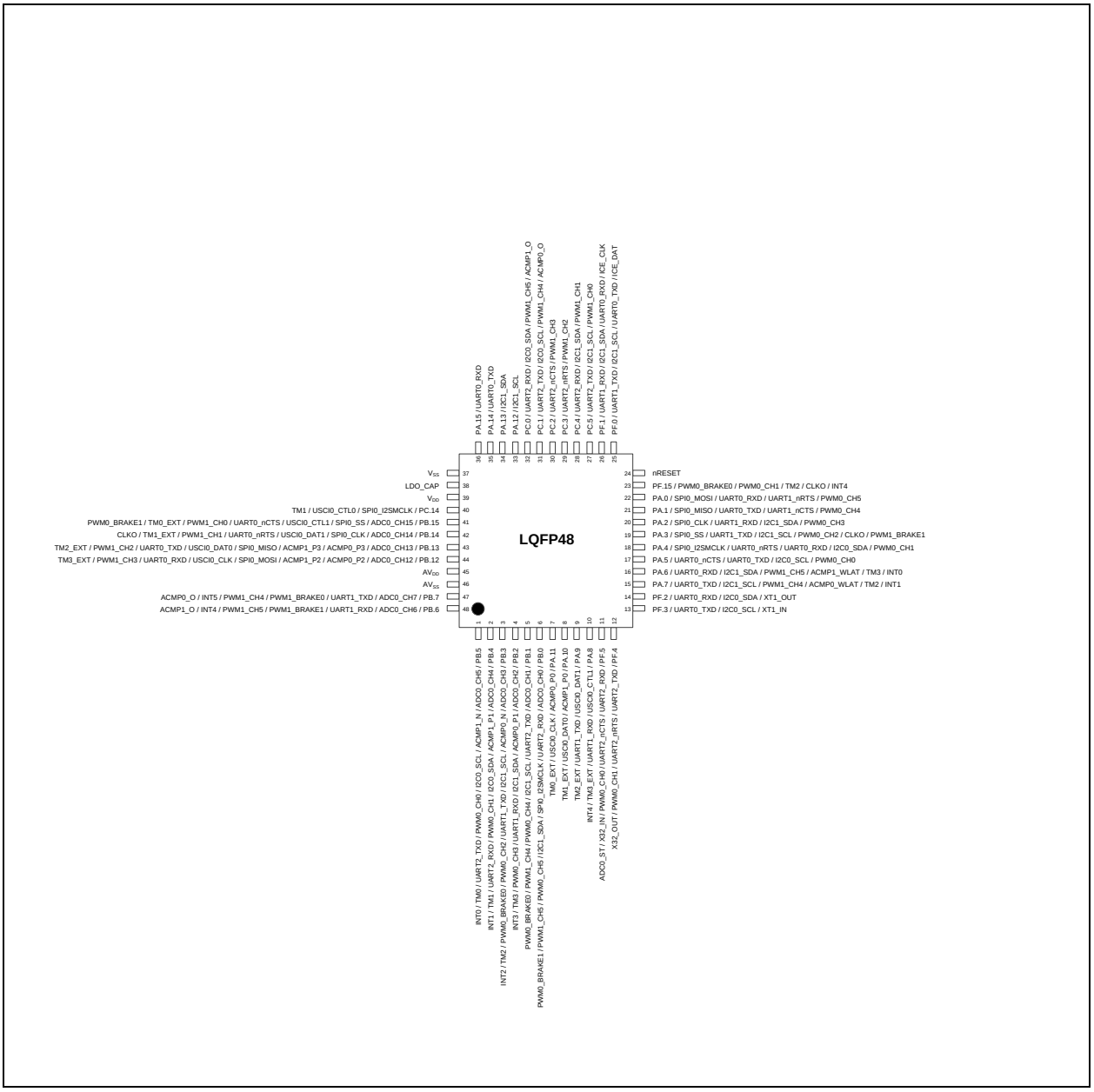

Figure 5.1-14 M031LC2AE Multi-function Pin Diagram

Pin	M031LC2AE Pin Function
1	PB.5 / ADC0_CH5 / ACMP1_N / I2C0_SCL / PWM0_CH0 / UART2_TXD / TM0 / INT0
2	PB.4 / ADC0_CH4 / ACMP1_P1 / I2C0_SDA / PWM0_CH1 / UART2_RXD / TM1 / INT1
3	PB.3 / ADC0_CH3 / ACMP0_N / I2C1_SCL / UART1_TXD / PWM0_CH2 / PWM0_BRAKE0 / TM2 / INT2

Pin	M031LC2AE Pin Function
4	PB.2 / ADC0_CH2 / ACMP0_P1 / I2C1_SDA / UART1_RXD / PWM0_CH3 / TM3 / INT3
5	PB.1 / ADC0_CH1 / UART2_TXD / I2C1_SCL / PWM0_CH4 / PWM1_CH4 / PWM0_BRAKE0
6	PB.0 / ADC0_CH0 / UART2_RXD / SPI0_I2SMCLK / I2C1_SDA / PWM0_CH5 / PWM1_CH5 / PWM0_BRAKE1
7	PA.11 / ACMP0_P0 / USCI0_CLK / TM0_EXT
8	PA.10 / ACMP1_P0 / USCI0_DAT0 / TM1_EXT
9	PA.9 / USCI0_DAT1 / UART1_TXD / TM2_EXT
10	PA.8 / USCI0_CTL1 / UART1_RXD / TM3_EXT / INT4
11	PF.5 / UART2_RXD / UART2_nCTS / PWM0_CH0 / X32_IN / ADC0_ST
12	PF.4 / UART2_TXD / UART2_nRTS / PWM0_CH1 / X32_OUT
13	PF.3 / UART0_TXD / I2C0_SCL / XT1_IN
14	PF.2 / UART0_RXD / I2C0_SDA / XT1_OUT
15	PA.7 / UART0_TXD / I2C1_SCL / PWM1_CH4 / ACMP0_WLAT / TM2 / INT1
16	PA.6 / UART0_RXD / I2C1_SDA / PWM1_CH5 / ACMP1_WLAT / TM3 / INT0
17	PA.5 / UART0_nCTS / UART0_TXD / I2C0_SCL / PWM0_CH0
18	PA.4 / SPI0_I2SMCLK / UART0_nRTS / UART0_RXD / I2C0_SDA / PWM0_CH1
19	PA.3 / SPI0_SS / UART1_TXD / I2C1_SCL / PWM0_CH2 / CLKO / PWM1_BRAKE1
20	PA.2 / SPI0_CLK / UART1_RXD / I2C1_SDA / PWM0_CH3
21	PA.1 / SPI0_MISO / UART0_TXD / UART1_nCTS / PWM0_CH4
22	PA.0 / SPI0_MOSI / UART0_RXD / UART1_nRTS / PWM0_CH5
23	PF.15 / PWM0_BRAKE0 / PWM0_CH1 / TM2 / CLKO / INT4
24	nRESET
25	PF.0 / UART1_TXD / I2C1_SCL / UART0_TXD / ICE_DAT
26	PF.1 / UART1_RXD / I2C1_SDA / UART0_RXD / ICE_CLK
27	PC.5 / UART2_TXD / I2C1_SCL / PWM1_CH0
28	PC.4 / UART2_RXD / I2C1_SDA / PWM1_CH1
29	PC.3 / UART2_nRTS / PWM1_CH2
30	PC.2 / UART2_nCTS / PWM1_CH3
31	PC.1 / UART2_TXD / I2C0_SCL / PWM1_CH4 / ACMP0_O
32	PC.0 / UART2_RXD / I2C0_SDA / PWM1_CH5 / ACMP1_O
33	PA.12 / I2C1_SCL
34	PA.13 / I2C1_SDA
35	PA.14 / UART0_TXD
36	PA.15 / UART0_RXD

Pin	M031LC2AE Pin Function
37	VSS
38	LDO_CAP
39	V_{DD}
40	PC.14 / SPI0_I2SMCLK / USCI0_CTL0 / TM1
41	PB.15 / ADC0_CH15 / SPI0_SS / USCI0_CTL1 / UART0_nCTS / PWM1_CH0 / TM0_EXT / PWM0_BRAKE1
42	PB.14 / ADC0_CH14 / SPI0_CLK / USCI0_DAT1 / UART0_nRTS / PWM1_CH1 / TM1_EXT / CLKO
43	PB.13 / ADC0_CH13 / ACMP0_P3 / ACMP1_P3 / SPI0_MISO / USCI0_DAT0 / UART0_TXD / PWM1_CH2 / TM2_EXT
44	PB.12 / ADC0_CH12 / ACMP0_P2 / ACMP1_P2 / SPI0_MOSI / USCI0_CLK / UART0_RXD / PWM1_CH3 / TM3_EXT
45	AV_{DD}
46	AVSS
47	PB.7 / ADC0_CH7 / UART1_TXD / PWM1_BRAKE0 / PWM1_CH4 / INT5 / ACMP0_O
48	PB.6 / ADC0_CH6 / UART1_RXD / PWM1_BRAKE1 / PWM1_CH5 / INT4 / ACMP1_O

Table 5.1-8 M031LC2AE Multi-function Pin Table

M031LD2AE

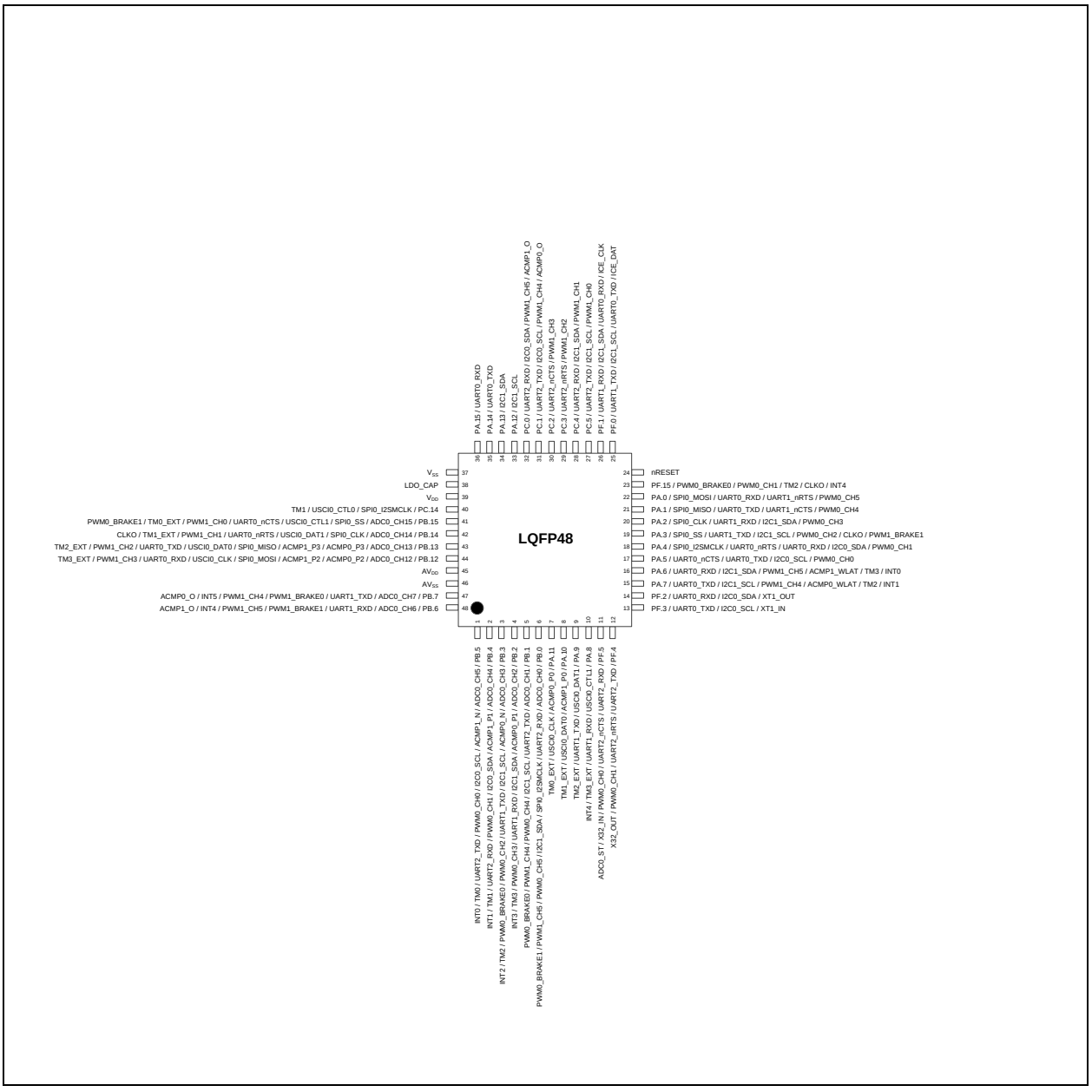

Figure 5.1-15 M031LD2AE Multi-function Pin Diagram

Pin	M031LD2AE Pin Function
1	PB.5 / ADC0_CH5 / ACMP1_N / I2C0_SCL / PWM0_CH0 / UART2_TXD / TM0 / INT0
2	PB.4 / ADC0_CH4 / ACMP1_P1 / I2C0_SDA / PWM0_CH1 / UART2_RXD / TM1 / INT1
3	PB.3 / ADC0_CH3 / ACMP0_N / I2C1_SCL / UART1_TXD / PWM0_CH2 / PWM0_BRAKE0 / TM2 / INT2
4	PB.2 / ADC0_CH2 / ACMP0_P1 / I2C1_SDA / UART1_RXD / PWM0_CH3 / TM3 / INT3
5	PB.1 / ADC0_CH1 / UART2_TXD / I2C1_SCL / PWM0_CH4 / PWM1_CH4 / PWM0_BRAKE0

Pin	M031LD2AE Pin Function
6	PB.0 / ADC0_CH0 / UART2_RXD / SPI0_I2SMCLK / I2C1_SDA / PWM0_CH5 / PWM1_CH5 / PWM0_BRAKE1
7	PA.11 / ACMP0_P0 / USCI0_CLK / TM0_EXT
8	PA.10 / ACMP1_P0 / USCI0_DAT0 / TM1_EXT
9	PA.9 / USCI0_DAT1 / UART1_TXD / TM2_EXT
10	PA.8 / USCI0_CTL1 / UART1_RXD / TM3_EXT / INT4
11	PF.5 / UART2_RXD / UART2_nCTS / PWM0_CH0 / X32_IN / ADC0_ST
12	PF.4 / UART2_TXD / UART2_nRTS / PWM0_CH1 / X32_OUT
13	PF.3 / UART0_TXD / I2C0_SCL / XT1_IN
14	PF.2 / UART0_RXD / I2C0_SDA / XT1_OUT
15	PA.7 / UART0_TXD / I2C1_SCL / PWM1_CH4 / ACMP0_WLAT / TM2 / INT1
16	PA.6 / UART0_RXD / I2C1_SDA / PWM1_CH5 / ACMP1_WLAT / TM3 / INT0
17	PA.5 / UART0_nCTS / UART0_TXD / I2C0_SCL / PWM0_CH0
18	PA.4 / SPI0_I2SMCLK / UART0_nRTS / UART0_RXD / I2C0_SDA / PWM0_CH1
19	PA.3 / SPI0_SS / UART1_TXD / I2C1_SCL / PWM0_CH2 / CLKO / PWM1_BRAKE1
20	PA.2 / SPI0_CLK / UART1_RXD / I2C1_SDA / PWM0_CH3
21	PA.1 / SPI0_MISO / UART0_TXD / UART1_nCTS / PWM0_CH4
22	PA.0 / SPI0_MOSI / UART0_RXD / UART1_nRTS / PWM0_CH5
23	PF.15 / PWM0_BRAKE0 / PWM0_CH1 / TM2 / CLKO / INT4
24	nRESET
25	PF.0 / UART1_TXD / I2C1_SCL / UART0_TXD / ICE_DAT
26	PF.1 / UART1_RXD / I2C1_SDA / UART0_RXD / ICE_CLK
27	PC.5 / UART2_TXD / I2C1_SCL / PWM1_CH0
28	PC.4 / UART2_RXD / I2C1_SDA / PWM1_CH1
29	PC.3 / UART2_nRTS / PWM1_CH2
30	PC.2 / UART2_nCTS / PWM1_CH3
31	PC.1 / UART2_TXD / I2C0_SCL / PWM1_CH4 / ACMP0_O
32	PC.0 / UART2_RXD / I2C0_SDA / PWM1_CH5 / ACMP1_O
33	PA.12 / I2C1_SCL
34	PA.13 / I2C1_SDA
35	PA.14 / UART0_TXD
36	PA.15 / UART0_RXD
37	VSS
38	LDO_CAP

Pin	M031LD2AE Pin Function
39	V_{DD}
40	PC.14 / SPI0_I2SMCLK / USCI0_CTL0 / TM1
41	PB.15 / ADC0_CH15 / SPI0_SS / USCI0_CTL1 / UART0_nCTS / PWM1_CH0 / TM0_EXT / PWM0_BRAKE1
42	PB.14 / ADC0_CH14 / SPI0_CLK / USCI0_DAT1 / UART0_nRTS / PWM1_CH1 / TM1_EXT / CLKO
43	PB.13 / ADC0_CH13 / ACMP0_P3 / ACMP1_P3 / SPI0_MISO / USCI0_DAT0 / UART0_TXD / PWM1_CH2 / TM2_EXT
44	PB.12 / ADC0_CH12 / ACMP0_P2 / ACMP1_P2 / SPI0_MOSI / USCI0_CLK / UART0_RXD / PWM1_CH3 / TM3_EXT
45	AV_{DD}
46	AVSS
47	PB.7 / ADC0_CH7 / UART1_TXD / PWM1_BRAKE0 / PWM1_CH4 / INT5 / ACMP0_O
48	PB.6 / ADC0_CH6 / UART1_RXD / PWM1_BRAKE1 / PWM1_CH5 / INT4 / ACMP1_O

Table 5.1-9 M031LD2AE Multi-function Pin Table

M031LE3AE

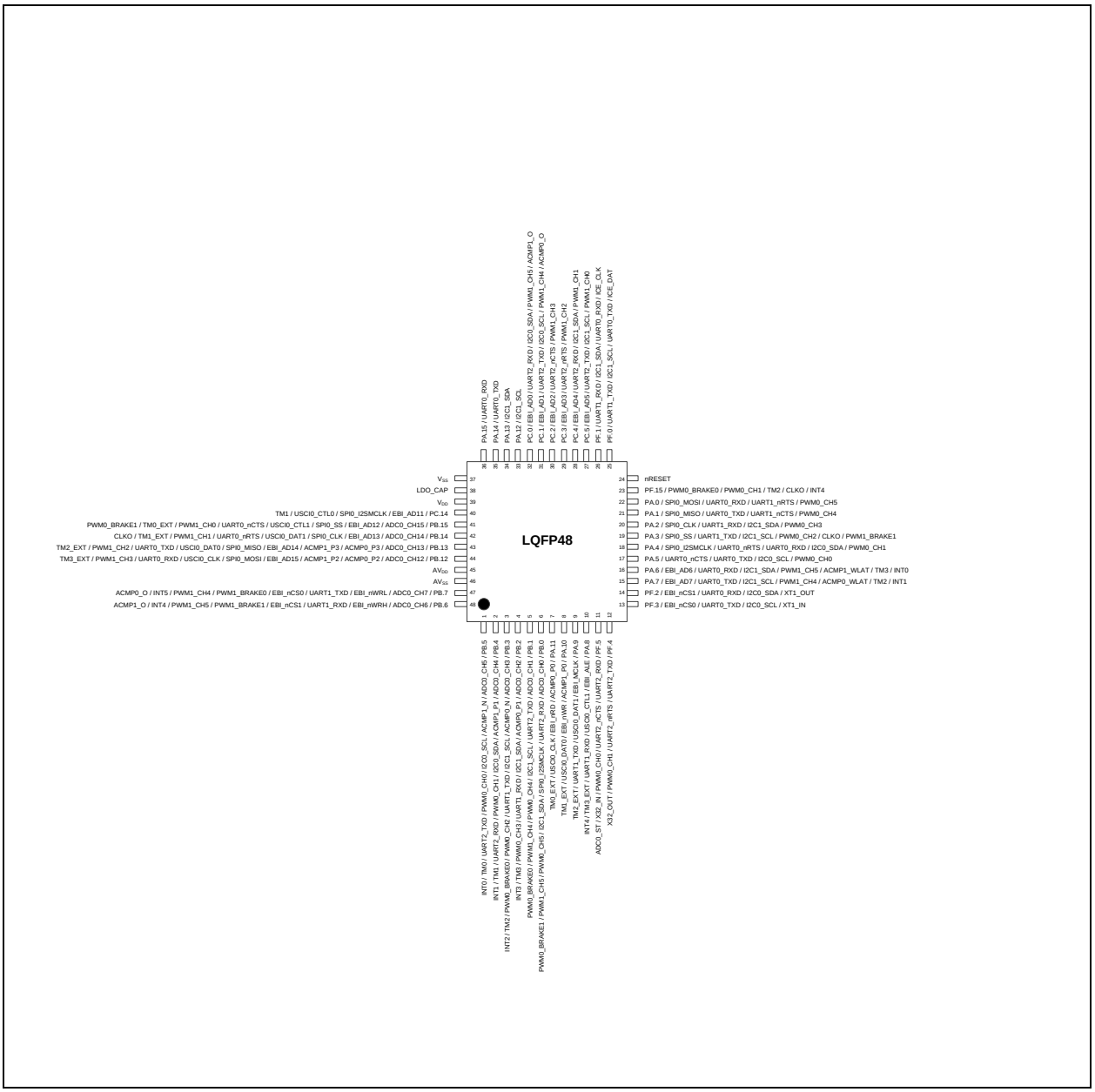

Figure 5.1-16 M031LE3AE Multi-function Pin Diagram

Pin	M031LE3AE Pin Function
1	PB.5 / ADC0_CH5 / ACMP1_N / I2C0_SCL / PWM0_CH0 / UART2_TXD / TM0 / INT0
2	PB.4 / ADC0_CH4 / ACMP1_P1 / I2C0_SDA / PWM0_CH1 / UART2_RXD / TM1 / INT1
3	PB.3 / ADC0_CH3 / ACMP0_N / I2C1_SCL / UART1_TXD / PWM0_CH2 / PWM0_BRAKE0 / TM2 / INT2
4	PB.2 / ADC0_CH2 / ACMP0_P1 / I2C1_SDA / UART1_RXD / PWM0_CH3 / TM3 / INT3
5	PB.1 / ADC0_CH1 / UART2_TXD / I2C1_SCL / PWM0_CH4 / PWM1_CH4 / PWM0_BRAKE0
6	PB.0 / ADC0_CH0 / UART2_RXD / SPI0_I2SMCLK / I2C1_SDA / PWM0_CH5 / PWM1_CH5 / PWM0_BRAKE1
7	PA.11 / ACMP0_P0 / EBI_nRD / USCI0_CLK / TM0_EXT
8	PA.10 / ACMP1_P0 / EBI_nWR / USCI0_DAT0 / TM1_EXT
9	PA.9 / EBI_MCLK / USCI0_DAT1 / UART1_TXD / TM2_EXT
10	PA.8 / EBI_ALE / USCI0_CTL1 / UART1_RXD / TM3_EXT / INT4
11	PF.5 / UART2_RXD / UART2_nCTS / PWM0_CH0 / X32_IN / ADC0_ST
12	PF.4 / UART2_TXD / UART2_nRTS / PWM0_CH1 / X32_OUT
13	PF.3 / EBI_nCS0 / UART0_TXD / I2C0_SCL / XT1_IN
14	PF.2 / EBI_nCS1 / UART0_RXD / I2C0_SDA / XT1_OUT
15	PA.7 / EBI_AD7 / UART0_TXD / I2C1_SCL / PWM1_CH4 / ACMP0_WLAT / TM2 / INT1
16	PA.6 / EBI_AD6 / UART0_RXD / I2C1_SDA / PWM1_CH5 / ACMP1_WLAT / TM3 / INT0
17	PA.5 / UART0_nCTS / UART0_TXD / I2C0_SCL / PWM0_CH0
18	PA.4 / SPI0_I2SMCLK / UART0_nRTS / UART0_RXD / I2C0_SDA / PWM0_CH1
19	PA.3 / SPI0_SS / UART1_TXD / I2C1_SCL / PWM0_CH2 / CLKO / PWM1_BRAKE1
20	PA.2 / SPI0_CLK / UART1_RXD / I2C1_SDA / PWM0_CH3
21	PA.1 / SPI0_MISO / UART0_TXD / UART1_nCTS / PWM0_CH4
22	PA.0 / SPI0_MOSI / UART0_RXD / UART1_nRTS / PWM0_CH5
23	PF.15 / PWM0_BRAKE0 / PWM0_CH1 / TM2 / CLKO / INT4
24	nRESET
25	PF.0 / UART1_TXD / I2C1_SCL / UART0_TXD / ICE_DAT
26	PF.1 / UART1_RXD / I2C1_SDA / UART0_RXD / ICE_CLK
27	PC.5 / EBI_AD5 / UART2_TXD / I2C1_SCL / PWM1_CH0
28	PC.4 / EBI_AD4 / UART2_RXD / I2C1_SDA / PWM1_CH1
29	PC.3 / EBI_AD3 / UART2_nRTS / PWM1_CH2
30	PC.2 / EBI_AD2 / UART2_nCTS / PWM1_CH3
31	PC.1 / EBI_AD1 / UART2_TXD / I2C0_SCL / PWM1_CH4 / ACMP0_O
32	PC.0 / EBI_AD0 / UART2_RXD / I2C0_SDA / PWM1_CH5 / ACMP1_O

Pin	M031LE3AE Pin Function
33	PA.12 / I2C1_SCL
34	PA.13 / I2C1_SDA
35	PA.14 / UART0_TXD
36	PA.15 / UART0_RXD
37	VSS
38	LDO_CAP
39	V_{DD}
40	PC.14 / EBI_AD11 / SPI0_I2SMCLK / USCI0_CTL0 / TM1
41	PB.15 / ADC0_CH15 / EBI_AD12 / SPI0_SS / USCI0_CTL1 / UART0_nCTS / PWM1_CH0 / TM0_EXT / PWM0_BRAKE1
42	PB.14 / ADC0_CH14 / EBI_AD13 / SPI0_CLK / USCI0_DAT1 / UART0_nRTS / PWM1_CH1 / TM1_EXT / CLKO
43	PB.13 / ADC0_CH13 / ACMP0_P3 / ACMP1_P3 / EBI_AD14 / SPI0_MISO / USCI0_DAT0 / UART0_TXD / PWM1_CH2 / TM2_EXT
44	PB.12 / ADC0_CH12 / ACMP0_P2 / ACMP1_P2 / EBI_AD15 / SPI0_MOSI / USCI0_CLK / UART0_RXD / PWM1_CH3 / TM3_EXT
45	AV_{DD}
46	AVSS
47	PB.7 / ADC0_CH7 / EBI_nWRL / UART1_TXD / EBI_nCS0 / PWM1_BRAKE0 / PWM1_CH4 / INT5 / ACMP0_O
48	PB.6 / ADC0_CH6 / EBI_nWRH / UART1_RXD / EBI_nCS1 / PWM1_BRAKE1 / PWM1_CH5 / INT4 / ACMP1_O

Table 5.1-10 M031LE3AE Multi-function Pin Table

M031LG6AE

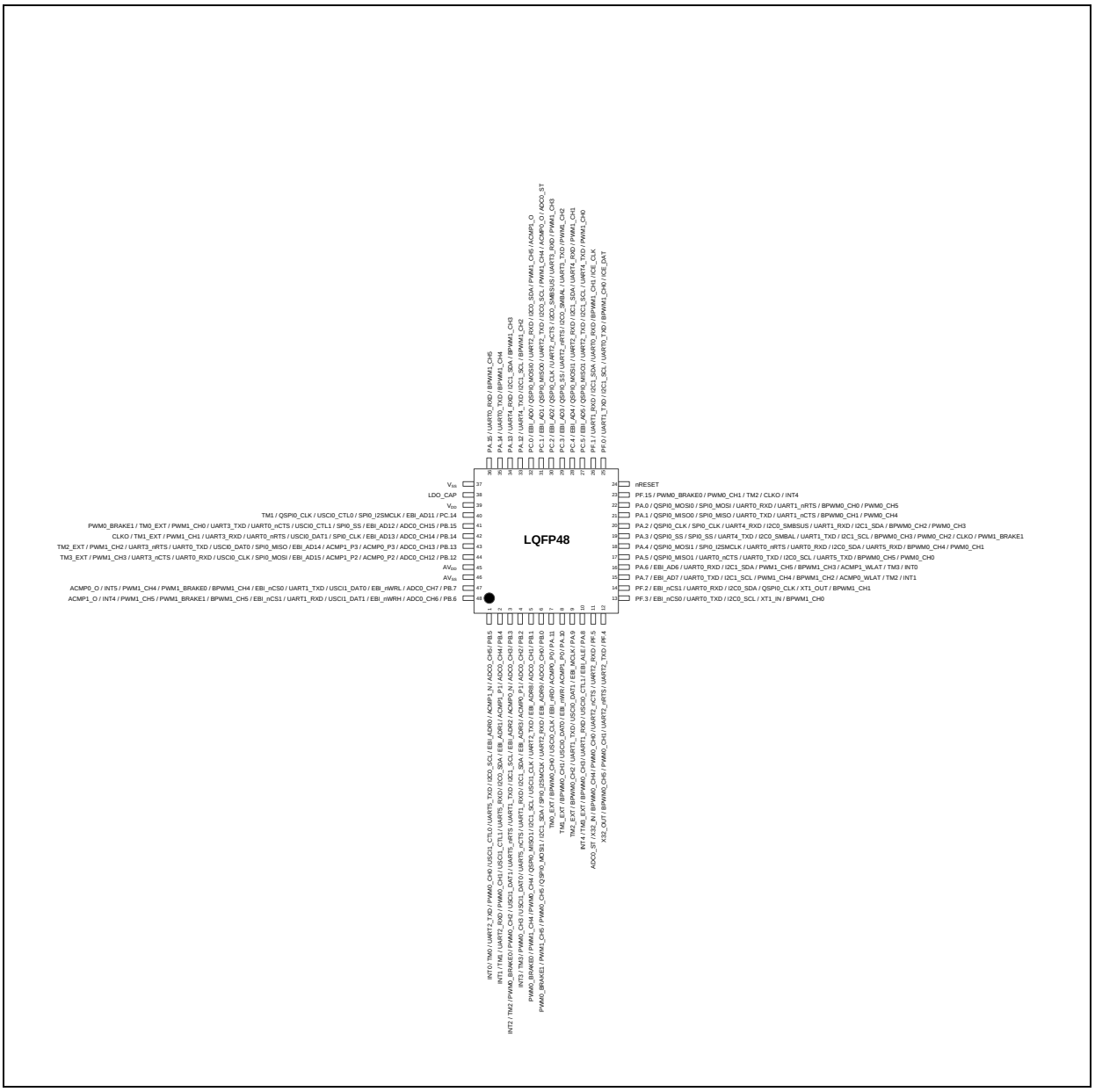

Figure 5.1-17 M031LG6AE Multi-function Pin Diagram

Pin	M031LG6AE Pin Function
1	PB.5 / ADC0_CH5 / ACMP1_N / EBI_ADR0 / I2C0_SCL / UART5_TXD / USCI1_CTL0 / PWM0_CH0 / UART2_TXD / TM0 / INT0
2	PB.4 / ADC0_CH4 / ACMP1_P1 / EBI_ADR1 / I2C0_SDA / UART5_RXD / USCI1_CTL1 / PWM0_CH1 / UART2_RXD / TM1 / INT1
3	PB.3 / ADC0_CH3 / ACMP0_N / EBI_ADR2 / I2C1_SCL / UART1_TXD / UART5_nRTS / USCI1_DAT1 / PWM0_CH2 / PWM0_BRAKE0 / TM2 / INT2

Pin	M031LG6AE Pin Function
4	PB.2 / ADC0_CH2 / ACMP0_P1 / EBI_ADR3 / I2C1_SDA / UART1_RXD / UART5_nCTS / USCI1_DAT0 / PWM0_CH3 / TM3 / INT3
5	PB.1 / ADC0_CH1 / EBI_ADR8 / UART2_TXD / USCI1_CLK / I2C1_SCL / QSPI0_MISO1 / PWM0_CH4 / PWM1_CH4 / PWM0_BRAKE0
6	PB.0 / ADC0_CH0 / EBI_ADR9 / UART2_RXD / SPI0_I2SMCLK / I2C1_SDA / QSPI0_MOSI1 / PWM0_CH5 / PWM1_CH5 / PWM0_BRAKE1
7	PA.11 / ACMP0_P0 / EBI_nRD / USCI0_CLK / BPWM0_CH0 / TM0_EXT
8	PA.10 / ACMP1_P0 / EBI_nWR / USCI0_DAT0 / BPWM0_CH1 / TM1_EXT
9	PA.9 / EBI_MCLK / USCI0_DAT1 / UART1_TXD / BPWM0_CH2 / TM2_EXT
10	PA.8 / EBI_ALE / USCI0_CTL1 / UART1_RXD / BPWM0_CH3 / TM3_EXT / INT4
11	PF.5 / UART2_RXD / UART2_nCTS / PWM0_CH0 / BPWM0_CH4 / X32_IN / ADC0_ST
12	PF.4 / UART2_TXD / UART2_nRTS / PWM0_CH1 / BPWM0_CH5 / X32_OUT
13	PF.3 / EBI_nCS0 / UART0_TXD / I2C0_SCL / XT1_IN / BPWM1_CH0
14	PF.2 / EBI_nCS1 / UART0_RXD / I2C0_SDA / QSPI0_CLK / XT1_OUT / BPWM1_CH1
15	PA.7 / EBI_AD7 / UART0_TXD / I2C1_SCL / PWM1_CH4 / BPWM1_CH2 / ACMP0_WLAT / TM2 / INT1
16	PA.6 / EBI_AD6 / UART0_RXD / I2C1_SDA / PWM1_CH5 / BPWM1_CH3 / ACMP1_WLAT / TM3 / INT0
17	PA.5 / QSPI0_MISO1 / UART0_nCTS / UART0_TXD / I2C0_SCL / UART5_TXD / BPWM0_CH5 / PWM0_CH0
18	PA.4 / QSPI0_MOSI1 / SPI0_I2SMCLK / UART0_nRTS / UART0_RXD / I2C0_SDA / UART5_RXD / BPWM0_CH4 / PWM0_CH1
19	PA.3 / QSPI0_SS / SPI0_SS / UART4_TXD / I2C0_SMBAL / UART1_TXD / I2C1_SCL / BPWM0_CH3 / PWM0_CH2 / CLKO / PWM1_BRAKE1
20	PA.2 / QSPI0_CLK / SPI0_CLK / UART4_RXD / I2C0_SMBSUS / UART1_RXD / I2C1_SDA / BPWM0_CH2 / PWM0_CH3
21	PA.1 / QSPI0_MISO0 / SPI0_MISO / UART0_TXD / UART1_nCTS / BPWM0_CH1 / PWM0_CH4
22	PA.0 / QSPI0_MOSI0 / SPI0_MOSI / UART0_RXD / UART1_nRTS / BPWM0_CH0 / PWM0_CH5
23	PF.15 / PWM0_BRAKE0 / PWM0_CH1 / TM2 / CLKO / INT4
24	nRESET
25	PF.0 / UART1_TXD / I2C1_SCL / UART0_TXD / BPWM1_CH0 / ICE_DAT
26	PF.1 / UART1_RXD / I2C1_SDA / UART0_RXD / BPWM1_CH1 / ICE_CLK
27	PC.5 / EBI_AD5 / QSPI0_MISO1 / UART2_TXD / I2C1_SCL / UART4_TXD / PWM1_CH0
28	PC.4 / EBI_AD4 / QSPI0_MOSI1 / UART2_RXD / I2C1_SDA / UART4_RXD / PWM1_CH1
29	PC.3 / EBI_AD3 / QSPI0_SS / UART2_nRTS / I2C0_SMBAL / UART3_TXD / PWM1_CH2
30	PC.2 / EBI_AD2 / QSPI0_CLK / UART2_nCTS / I2C0_SMBSUS / UART3_RXD / PWM1_CH3
31	PC.1 / EBI_AD1 / QSPI0_MISO0 / UART2_TXD / I2C0_SCL / PWM1_CH4 / ACMP0_O / ADC0_ST
32	PC.0 / EBI_AD0 / QSPI0_MOSI0 / UART2_RXD / I2C0_SDA / PWM1_CH5 / ACMP1_O
33	PA.12 / UART4_TXD / I2C1_SCL / BPWM1_CH2

Pin	M031LG6AE Pin Function
34	PA.13 / UART4_RXD / I2C1_SDA / BPWM1_CH3
35	PA.14 / UART0_TXD / BPWM1_CH4
36	PA.15 / UART0_RXD / BPWM1_CH5
37	VSS
38	LDO_CAP
39	V_{DD}
40	PC.14 / EBI_AD11 / SPI0_I2SMCLK / USCI0_CTL0 / QSPI0_CLK / TM1
41	PB.15 / ADC0_CH15 / EBI_AD12 / SPI0_SS / USCI0_CTL1 / UART0_nCTS / UART3_TXD / PWM1_CH0 / TM0_EXT / PWM0_BRAKE1
42	PB.14 / ADC0_CH14 / EBI_AD13 / SPI0_CLK / USCI0_DAT1 / UART0_nRTS / UART3_RXD / PWM1_CH1 / TM1_EXT / CLKO
43	PB.13 / ADC0_CH13 / ACMP0_P3 / ACMP1_P3 / EBI_AD14 / SPI0_MISO / USCI0_DAT0 / UART0_TXD / UART3_nRTS / PWM1_CH2 / TM2_EXT
44	PB.12 / ADC0_CH12 / ACMP0_P2 / ACMP1_P2 / EBI_AD15 / SPI0_MOSI / USCI0_CLK / UART0_RXD / UART3_nCTS / PWM1_CH3 / TM3_EXT
45	AV_{DD}
46	AVSS
47	PB.7 / ADC0_CH7 / EBI_nWRL / USCI1_DAT0 / UART1_TXD / EBI_nCS0 / BPWM1_CH4 / PWM1_BRAKE0 / PWM1_CH4 / INT5 / ACMP0_O
48	PB.6 / ADC0_CH6 / EBI_nWRH / USCI1_DAT1 / UART1_RXD / EBI_nCS1 / BPWM1_CH5 / PWM1_BRAKE1 / PWM1_CH5 / INT4 / ACMP1_O

Table 5.1-11 M031LG6AE Multi-function Pin Table

M031LG8AE

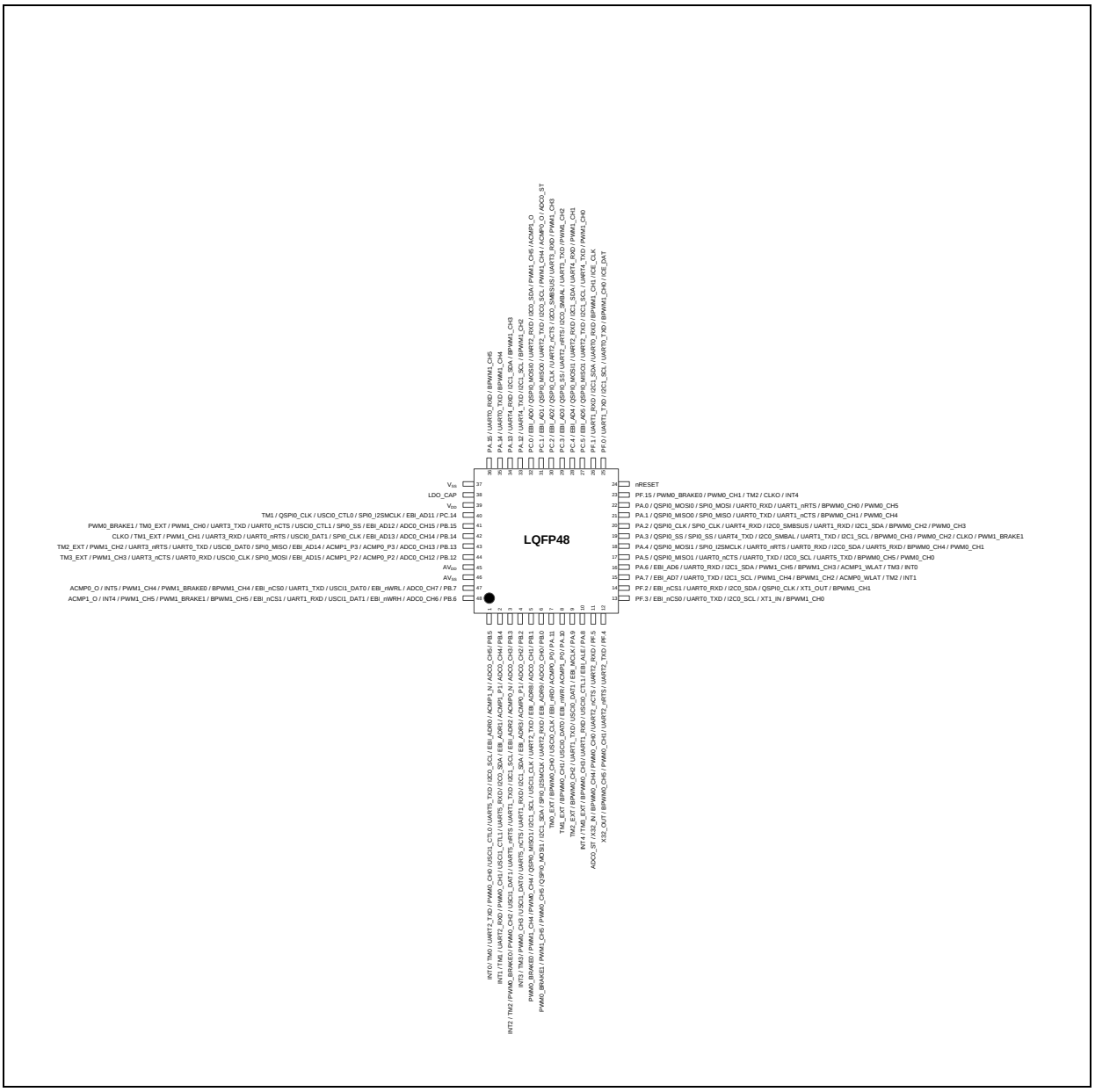

Figure 5.1-18 M031LG8AE Multi-function Pin Diagram

Pin	M031LG8AE Pin Function
1	PB.5 / ADC0_CH5 / ACMP1_N / EBI_ADR0 / I2C0_SCL / UART5_TXD / USCI1_CTL0 / PWM0_CH0 / UART2_TXD / TM0 / INT0
2	PB.4 / ADC0_CH4 / ACMP1_P1 / EBI_ADR1 / I2C0_SDA / UART5_RXD / USCI1_CTL1 / PWM0_CH1 / UART2_RXD / TM1 / INT1
3	PB.3 / ADC0_CH3 / ACMP0_N / EBI_ADR2 / I2C1_SCL / UART1_TXD / UART5_nRTS / USCI1_DAT1 / PWM0_CH2 / PWM0_BRAKE0 / TM2 / INT2

Pin	M031LG8AE Pin Function
4	PB.2 / ADC0_CH2 / ACMP0_P1 / EBI_ADR3 / I2C1_SDA / UART1_RXD / UART5_nCTS / USCI1_DAT0 / PWM0_CH3 / TM3 / INT3
5	PB.1 / ADC0_CH1 / EBI_ADR8 / UART2_TXD / USCI1_CLK / I2C1_SCL / QSPI0_MISO1 / PWM0_CH4 / PWM1_CH4 / PWM0_BRAKE0
6	PB.0 / ADC0_CH0 / EBI_ADR9 / UART2_RXD / SPI0_I2SMCLK / I2C1_SDA / QSPI0_MOSI1 / PWM0_CH5 / PWM1_CH5 / PWM0_BRAKE1
7	PA.11 / ACMP0_P0 / EBI_nRD / USCI0_CLK / BPWM0_CH0 / TM0_EXT
8	PA.10 / ACMP1_P0 / EBI_nWR / USCI0_DAT0 / BPWM0_CH1 / TM1_EXT
9	PA.9 / EBI_MCLK / USCI0_DAT1 / UART1_TXD / BPWM0_CH2 / TM2_EXT
10	PA.8 / EBI_ALE / USCI0_CTL1 / UART1_RXD / BPWM0_CH3 / TM3_EXT / INT4
11	PF.5 / UART2_RXD / UART2_nCTS / PWM0_CH0 / BPWM0_CH4 / X32_IN / ADC0_ST
12	PF.4 / UART2_TXD / UART2_nRTS / PWM0_CH1 / BPWM0_CH5 / X32_OUT
13	PF.3 / EBI_nCS0 / UART0_TXD / I2C0_SCL / XT1_IN / BPWM1_CH0
14	PF.2 / EBI_nCS1 / UART0_RXD / I2C0_SDA / QSPI0_CLK / XT1_OUT / BPWM1_CH1
15	PA.7 / EBI_AD7 / UART0_TXD / I2C1_SCL / PWM1_CH4 / BPWM1_CH2 / ACMP0_WLAT / TM2 / INT1
16	PA.6 / EBI_AD6 / UART0_RXD / I2C1_SDA / PWM1_CH5 / BPWM1_CH3 / ACMP1_WLAT / TM3 / INT0
17	PA.5 / QSPI0_MISO1 / UART0_nCTS / UART0_TXD / I2C0_SCL / UART5_TXD / BPWM0_CH5 / PWM0_CH0
18	PA.4 / QSPI0_MOSI1 / SPI0_I2SMCLK / UART0_nRTS / UART0_RXD / I2C0_SDA / UART5_RXD / BPWM0_CH4 / PWM0_CH1
19	PA.3 / QSPI0_SS / SPI0_SS / UART4_TXD / I2C0_SMBAL / UART1_TXD / I2C1_SCL / BPWM0_CH3 / PWM0_CH2 / CLKO / PWM1_BRAKE1
20	PA.2 / QSPI0_CLK / SPI0_CLK / UART4_RXD / I2C0_SMBSUS / UART1_RXD / I2C1_SDA / BPWM0_CH2 / PWM0_CH3
21	PA.1 / QSPI0_MISO0 / SPI0_MISO / UART0_TXD / UART1_nCTS / BPWM0_CH1 / PWM0_CH4
22	PA.0 / QSPI0_MOSI0 / SPI0_MOSI / UART0_RXD / UART1_nRTS / BPWM0_CH0 / PWM0_CH5
23	PF.15 / PWM0_BRAKE0 / PWM0_CH1 / TM2 / CLKO / INT4
24	nRESET
25	PF.0 / UART1_TXD / I2C1_SCL / UART0_TXD / BPWM1_CH0 / ICE_DAT
26	PF.1 / UART1_RXD / I2C1_SDA / UART0_RXD / BPWM1_CH1 / ICE_CLK
27	PC.5 / EBI_AD5 / QSPI0_MISO1 / UART2_TXD / I2C1_SCL / UART4_TXD / PWM1_CH0
28	PC.4 / EBI_AD4 / QSPI0_MOSI1 / UART2_RXD / I2C1_SDA / UART4_RXD / PWM1_CH1
29	PC.3 / EBI_AD3 / QSPI0_SS / UART2_nRTS / I2C0_SMBAL / UART3_TXD / PWM1_CH2
30	PC.2 / EBI_AD2 / QSPI0_CLK / UART2_nCTS / I2C0_SMBSUS / UART3_RXD / PWM1_CH3
31	PC.1 / EBI_AD1 / QSPI0_MISO0 / UART2_TXD / I2C0_SCL / PWM1_CH4 / ACMP0_O / ADC0_ST
32	PC.0 / EBI_AD0 / QSPI0_MOSI0 / UART2_RXD / I2C0_SDA / PWM1_CH5 / ACMP1_O
33	PA.12 / UART4_TXD / I2C1_SCL / BPWM1_CH2

Pin	M031LG8AE Pin Function
34	PA.13 / UART4_RXD / I2C1_SDA / BPWM1_CH3
35	PA.14 / UART0_TXD / BPWM1_CH4
36	PA.15 / UART0_RXD / BPWM1_CH5
37	VSS
38	LDO_CAP
39	V_{DD}
40	PC.14 / EBI_AD11 / SPI0_I2SMCLK / USCI0_CTL0 / QSPI0_CLK / TM1
41	PB.15 / ADC0_CH15 / EBI_AD12 / SPI0_SS / USCI0_CTL1 / UART0_nCTS / UART3_TXD / PWM1_CH0 / TM0_EXT / PWM0_BRAKE1
42	PB.14 / ADC0_CH14 / EBI_AD13 / SPI0_CLK / USCI0_DAT1 / UART0_nRTS / UART3_RXD / PWM1_CH1 / TM1_EXT / CLKO
43	PB.13 / ADC0_CH13 / ACMP0_P3 / ACMP1_P3 / EBI_AD14 / SPI0_MISO / USCI0_DAT0 / UART0_TXD / UART3_nRTS / PWM1_CH2 / TM2_EXT
44	PB.12 / ADC0_CH12 / ACMP0_P2 / ACMP1_P2 / EBI_AD15 / SPI0_MOSI / USCI0_CLK / UART0_RXD / UART3_nCTS / PWM1_CH3 / TM3_EXT
45	AV_{DD}
46	AVSS
47	PB.7 / ADC0_CH7 / EBI_nWRL / USCI1_DAT0 / UART1_TXD / EBI_nCS0 / BPWM1_CH4 / PWM1_BRAKE0 / PWM1_CH4 / INT5 / ACMP0_O
48	PB.6 / ADC0_CH6 / EBI_nWRH / USCI1_DAT1 / UART1_RXD / EBI_nCS1 / BPWM1_CH5 / PWM1_BRAKE1 / PWM1_CH5 / INT4 / ACMP1_O

Table 5.1-12 M031LG8AE Multi-function Pin Table

5.1.2.5 M031 Series LQFP 64-Pin Multi-function Pin Diagram

Corresponding Part Number: M031SC2AE, M031SD2AE, M031SE3AE, M031SG6AE, M031SG8AE, M031SIAAE

M031SC2AE

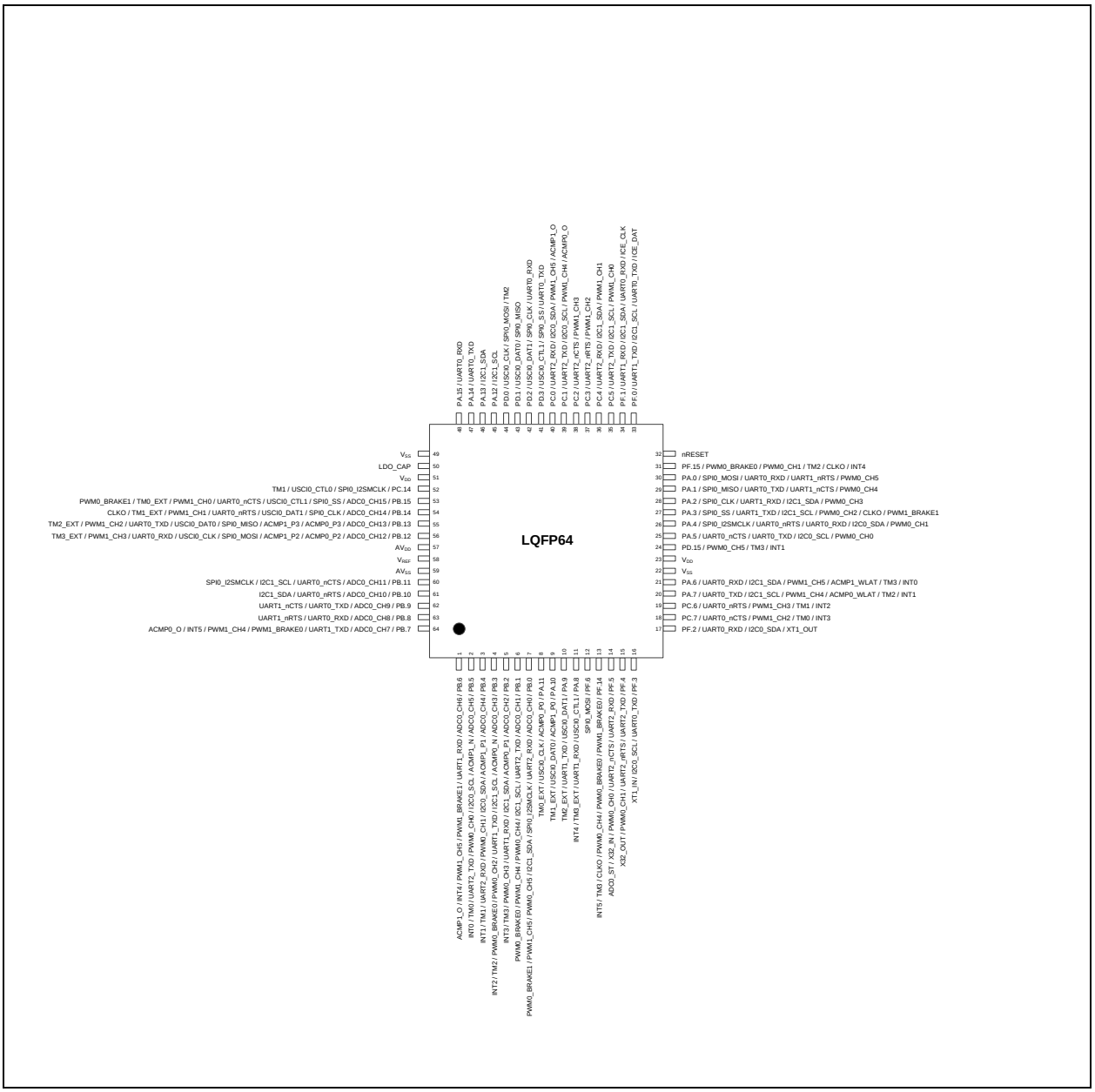

Figure 5.1-19 M031SC2AE Multi-function Pin Diagram

Pin	M031SC2AE Pin Function
1	PB.6 / ADC0_CH6 / UART1_RXD / PWM1_BRAKE1 / PWM1_CH5 / INT4 / ACMP1_O
2	PB.5 / ADC0_CH5 / ACMP1_N / I2C0_SCL / PWM0_CH0 / UART2_TXD / TM0 / INT0
3	PB.4 / ADC0_CH4 / ACMP1_P1 / I2C0_SDA / PWM0_CH1 / UART2_RXD / TM1 / INT1

Pin	M031SC2AE Pin Function
4	PB.3 / ADC0_CH3 / ACMP0_N / I2C1_SCL / UART1_TXD / PWM0_CH2 / PWM0_BRAKE0 / TM2 / INT2
5	PB.2 / ADC0_CH2 / ACMP0_P1 / I2C1_SDA / UART1_RXD / PWM0_CH3 / TM3 / INT3
6	PB.1 / ADC0_CH1 / UART2_TXD / I2C1_SCL / PWM0_CH4 / PWM1_CH4 / PWM0_BRAKE0
7	PB.0 / ADC0_CH0 / UART2_RXD / SPI0_I2SMCLK / I2C1_SDA / PWM0_CH5 / PWM1_CH5 / PWM0_BRAKE1
8	PA.11 / ACMP0_P0 / USCI0_CLK / TM0_EXT
9	PA.10 / ACMP1_P0 / USCI0_DAT0 / TM1_EXT
10	PA.9 / USCI0_DAT1 / UART1_TXD / TM2_EXT
11	PA.8 / USCI0_CTL1 / UART1_RXD / TM3_EXT / INT4
12	PF.6 / SPI0_MOSI
13	PF.14 / PWM1_BRAKE0 / PWM0_BRAKE0 / PWM0_CH4 / CLKO / TM3 / INT5
14	PF.5 / UART2_RXD / UART2_nCTS / PWM0_CH0 / X32_IN / ADC0_ST
15	PF.4 / UART2_TXD / UART2_nRTS / PWM0_CH1 / X32_OUT
16	PF.3 / UART0_TXD / I2C0_SCL / XT1_IN
17	PF.2 / UART0_RXD / I2C0_SDA / XT1_OUT
18	PC.7 / UART0_nCTS / PWM1_CH2 / TM0 / INT3
19	PC.6 / UART0_nRTS / PWM1_CH3 / TM1 / INT2
20	PA.7 / UART0_TXD / I2C1_SCL / PWM1_CH4 / ACMP0_WLAT / TM2 / INT1
21	PA.6 / UART0_RXD / I2C1_SDA / PWM1_CH5 / ACMP1_WLAT / TM3 / INT0
22	VSS
23	V_{DD}
24	PD.15 / PWM0_CH5 / TM3 / INT1
25	PA.5 / UART0_nCTS / UART0_TXD / I2C0_SCL / PWM0_CH0
26	PA.4 / SPI0_I2SMCLK / UART0_nRTS / UART0_RXD / I2C0_SDA / PWM0_CH1
27	PA.3 / SPI0_SS / UART1_TXD / I2C1_SCL / PWM0_CH2 / CLKO / PWM1_BRAKE1
28	PA.2 / SPI0_CLK / UART1_RXD / I2C1_SDA / PWM0_CH3
29	PA.1 / SPI0_MISO / UART0_TXD / UART1_nCTS / PWM0_CH4
30	PA.0 / SPI0_MOSI / UART0_RXD / UART1_nRTS / PWM0_CH5
31	PF.15 / PWM0_BRAKE0 / PWM0_CH1 / TM2 / CLKO / INT4
32	nRESET
33	PF.0 / UART1_TXD / I2C1_SCL / UART0_TXD / ICE_DAT
34	PF.1 / UART1_RXD / I2C1_SDA / UART0_RXD / ICE_CLK
35	PC.5 / UART2_TXD / I2C1_SCL / PWM1_CH0
36	PC.4 / UART2_RXD / I2C1_SDA / PWM1_CH1

Pin	M031SC2AE Pin Function
37	PC.3 / UART2_nRTS / PWM1_CH2
38	PC.2 / UART2_nCTS / PWM1_CH3
39	PC.1 / UART2_TXD / I2C0_SCL / PWM1_CH4 / ACMP0_O
40	PC.0 / UART2_RXD / I2C0_SDA / PWM1_CH5 / ACMP1_O
41	PD.3 / USCI0_CTL1 / SPI0_SS / UART0_TXD
42	PD.2 / USCI0_DAT1 / SPI0_CLK / UART0_RXD
43	PD.1 / USCI0_DAT0 / SPI0_MISO
44	PD.0 / USCI0_CLK / SPI0_MOSI / TM2
45	PA.12 / I2C1_SCL
46	PA.13 / I2C1_SDA
47	PA.14 / UART0_TXD
48	PA.15 / UART0_RXD
49	VSS
50	LDO_CAP
51	V_{DD}
52	PC.14 / SPI0_I2SMCLK / USCI0_CTL0 / TM1
53	PB.15 / ADC0_CH15 / SPI0_SS / USCI0_CTL1 / UART0_nCTS / PWM1_CH0 / TM0_EXT / PWM0_BRAKE1
54	PB.14 / ADC0_CH14 / SPI0_CLK / USCI0_DAT1 / UART0_nRTS / PWM1_CH1 / TM1_EXT / CLKO
55	PB.13 / ADC0_CH13 / ACMP0_P3 / ACMP1_P3 / SPI0_MISO / USCI0_DAT0 / UART0_TXD / PWM1_CH2 / TM2_EXT
56	PB.12 / ADC0_CH12 / ACMP0_P2 / ACMP1_P2 / SPI0_MOSI / USCI0_CLK / UART0_RXD / PWM1_CH3 / TM3_EXT
57	AV_{DD}
58	V_{REF}
59	AVSS
60	PB.11 / ADC0_CH11 / UART0_nCTS / I2C1_SCL / SPI0_I2SMCLK
61	PB.10 / ADC0_CH10 / UART0_nRTS / I2C1_SDA
62	PB.9 / ADC0_CH9 / UART0_TXD / UART1_nCTS
63	PB.8 / ADC0_CH8 / UART0_RXD / UART1_nRTS
64	PB.7 / ADC0_CH7 / UART1_TXD / PWM1_BRAKE0 / PWM1_CH4 / INT5 / ACMP0_O

Table 5.1-13 M031SC2AE Multi-function Pin Table

M031SD2AE

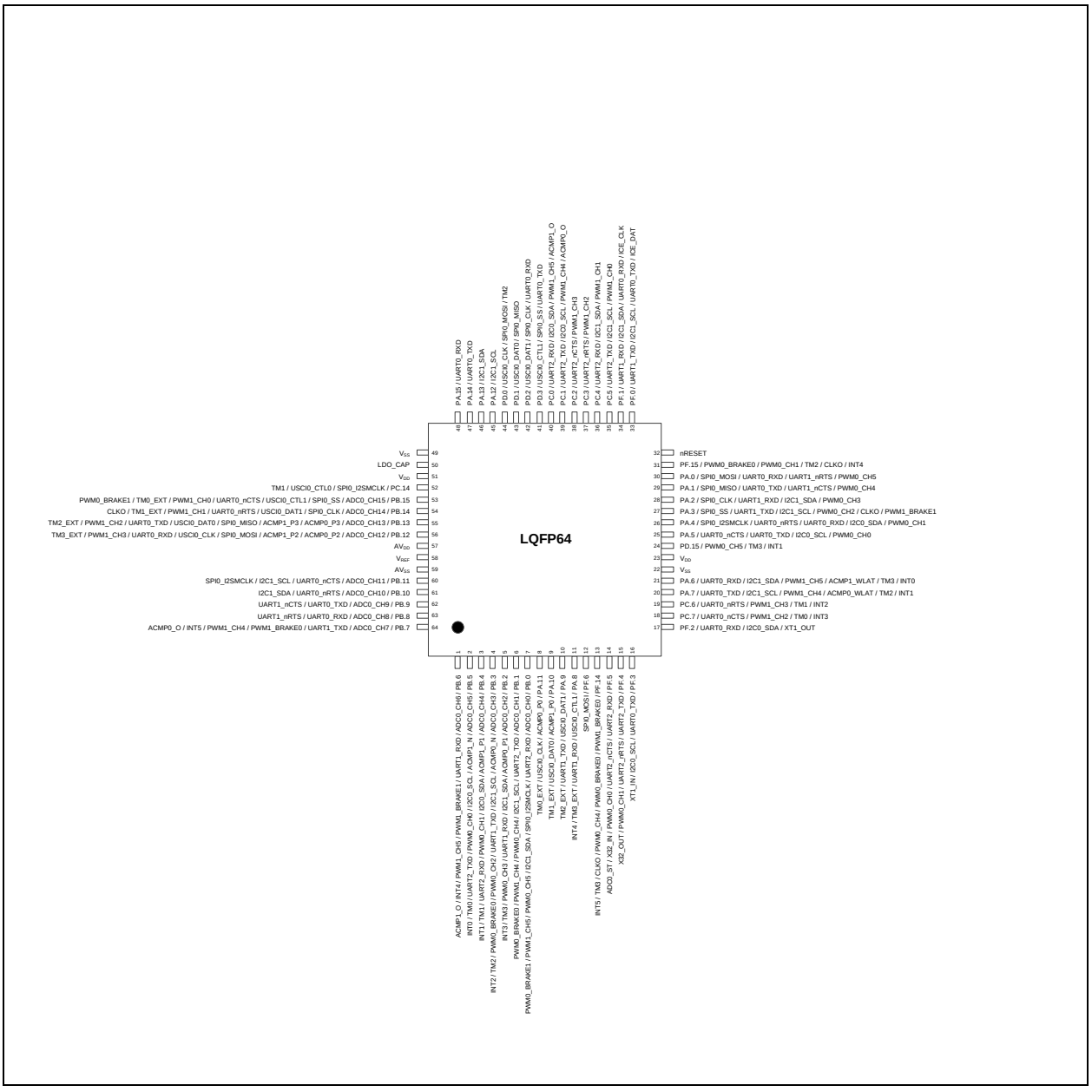

Figure 5.1-20 M031SD2AE Multi-function Pin Diagram

Pin	M031SD2AE Pin Function
1	PB.6 / ADC0_CH6 / UART1_RXD / PWM1_BRAKE1 / PWM1_CH5 / INT4 / ACMP1_O
2	PB.5 / ADC0_CH5 / ACMP1_N / I2C0_SCL / PWM0_CH0 / UART2_TXD / TM0 / INT0
3	PB.4 / ADC0_CH4 / ACMP1_P1 / I2C0_SDA / PWM0_CH1 / UART2_RXD / TM1 / INT1
4	PB.3 / ADC0_CH3 / ACMP0_N / I2C1_SCL / UART1_TXD / PWM0_CH2 / PWM0_BRAKE0 / TM2 / INT2

Pin	M031SD2AE Pin Function
5	PB.2 / ADC0_CH2 / ACMP0_P1 / I2C1_SDA / UART1_RXD / PWM0_CH3 / TM3 / INT3
6	PB.1 / ADC0_CH1 / UART2_TXD / I2C1_SCL / PWM0_CH4 / PWM1_CH4 / PWM0_BRAKE0
7	PB.0 / ADC0_CH0 / UART2_RXD / SPI0_I2SMCLK / I2C1_SDA / PWM0_CH5 / PWM1_CH5 / PWM0_BRAKE1
8	PA.11 / ACMP0_P0 / USCI0_CLK / TM0_EXT
9	PA.10 / ACMP1_P0 / USCI0_DAT0 / TM1_EXT
10	PA.9 / USCI0_DAT1 / UART1_TXD / TM2_EXT
11	PA.8 / USCI0_CTL1 / UART1_RXD / TM3_EXT / INT4
12	PF.6 / SPI0_MOSI
13	PF.14 / PWM1_BRAKE0 / PWM0_BRAKE0 / PWM0_CH4 / CLKO / TM3 / INT5
14	PF.5 / UART2_RXD / UART2_nCTS / PWM0_CH0 / X32_IN / ADC0_ST
15	PF.4 / UART2_TXD / UART2_nRTS / PWM0_CH1 / X32_OUT
16	PF.3 / UART0_TXD / I2C0_SCL / XT1_IN
17	PF.2 / UART0_RXD / I2C0_SDA / XT1_OUT
18	PC.7 / UART0_nCTS / PWM1_CH2 / TM0 / INT3
19	PC.6 / UART0_nRTS / PWM1_CH3 / TM1 / INT2
20	PA.7 / UART0_TXD / I2C1_SCL / PWM1_CH4 / ACMP0_WLAT / TM2 / INT1
21	PA.6 / UART0_RXD / I2C1_SDA / PWM1_CH5 / ACMP1_WLAT / TM3 / INT0
22	VSS
23	V_{DD}
24	PD.15 / PWM0_CH5 / TM3 / INT1
25	PA.5 / UART0_nCTS / UART0_TXD / I2C0_SCL / PWM0_CH0
26	PA.4 / SPI0_I2SMCLK / UART0_nRTS / UART0_RXD / I2C0_SDA / PWM0_CH1
27	PA.3 / SPI0_SS / UART1_TXD / I2C1_SCL / PWM0_CH2 / CLKO / PWM1_BRAKE1
28	PA.2 / SPI0_CLK / UART1_RXD / I2C1_SDA / PWM0_CH3
29	PA.1 / SPI0_MISO / UART0_TXD / UART1_nCTS / PWM0_CH4
30	PA.0 / SPI0_MOSI / UART0_RXD / UART1_nRTS / PWM0_CH5
31	PF.15 / PWM0_BRAKE0 / PWM0_CH1 / TM2 / CLKO / INT4
32	nRESET
33	PF.0 / UART1_TXD / I2C1_SCL / UART0_TXD / ICE_DAT
34	PF.1 / UART1_RXD / I2C1_SDA / UART0_RXD / ICE_CLK
35	PC.5 / UART2_TXD / I2C1_SCL / PWM1_CH0
36	PC.4 / UART2_RXD / I2C1_SDA / PWM1_CH1
37	PC.3 / UART2_nRTS / PWM1_CH2

Pin	M031SD2AE Pin Function
38	PC.2 / UART2_nCTS / PWM1_CH3
39	PC.1 / UART2_TXD / I2C0_SCL / PWM1_CH4 / ACMP0_O
40	PC.0 / UART2_RXD / I2C0_SDA / PWM1_CH5 / ACMP1_O
41	PD.3 / USCI0_CTL1 / SPI0_SS / UART0_TXD
42	PD.2 / USCI0_DAT1 / SPI0_CLK / UART0_RXD
43	PD.1 / USCI0_DAT0 / SPI0_MISO
44	PD.0 / USCI0_CLK / SPI0_MOSI / TM2
45	PA.12 / I2C1_SCL
46	PA.13 / I2C1_SDA
47	PA.14 / UART0_TXD
48	PA.15 / UART0_RXD
49	VSS
50	LDO_CAP
51	V_{DD}
52	PC.14 / SPI0_I2SMCLK / USCI0_CTL0 / TM1
53	PB.15 / ADC0_CH15 / SPI0_SS / USCI0_CTL1 / UART0_nCTS / PWM1_CH0 / TM0_EXT / PWM0_BRAKE1
54	PB.14 / ADC0_CH14 / SPI0_CLK / USCI0_DAT1 / UART0_nRTS / PWM1_CH1 / TM1_EXT / CLKO
55	PB.13 / ADC0_CH13 / ACMP0_P3 / ACMP1_P3 / SPI0_MISO / USCI0_DAT0 / UART0_TXD / PWM1_CH2 / TM2_EXT
56	PB.12 / ADC0_CH12 / ACMP0_P2 / ACMP1_P2 / SPI0_MOSI / USCI0_CLK / UART0_RXD / PWM1_CH3 / TM3_EXT
57	AV_{DD}
58	V_{REF}
59	AVSS
60	PB.11 / ADC0_CH11 / UART0_nCTS / I2C1_SCL / SPI0_I2SMCLK
61	PB.10 / ADC0_CH10 / UART0_nRTS / I2C1_SDA
62	PB.9 / ADC0_CH9 / UART0_TXD / UART1_nCTS
63	PB.8 / ADC0_CH8 / UART0_RXD / UART1_nRTS
64	PB.7 / ADC0_CH7 / UART1_TXD / PWM1_BRAKE0 / PWM1_CH4 / INT5 / ACMP0_O

Table 5.1-14 M031SD2AE Multi-function Pin Table

M031SE3AE

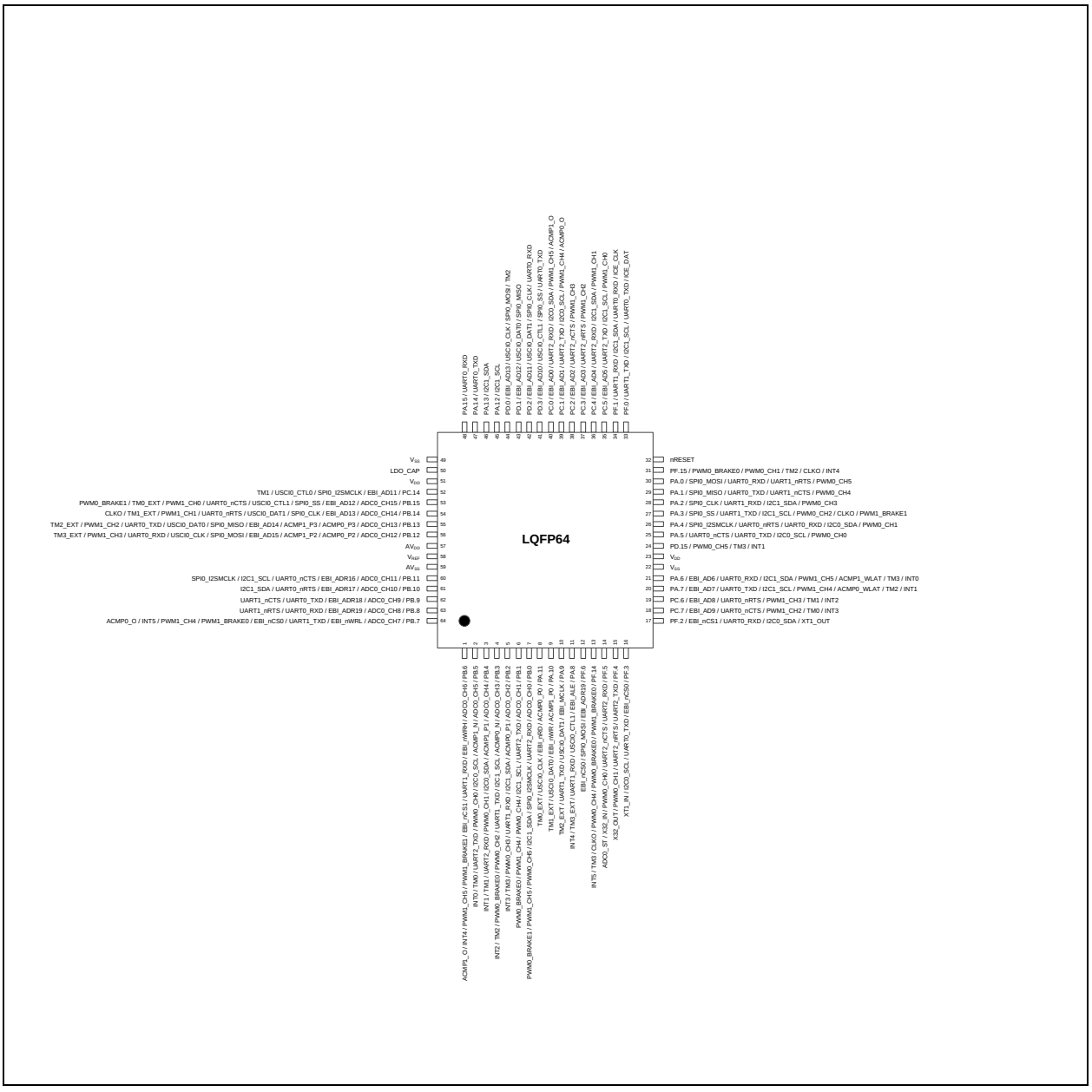

Figure 5.1-21 M031SE3AE Multi-function Pin Diagram

Pin	M031SE3AE Pin Function
1	PB.6 / ADC0_CH6 / EBI_nWRH / UART1_RXD / EBI_nCS1 / PWM1_BRAKE1 / PWM1_CH5 / INT4 / ACMP1_O
2	PB.5 / ADC0_CH5 / ACMP1_N / I2C0_SCL / PWM0_CH0 / UART2_TXD / TM0 / INT0
3	PB.4 / ADC0_CH4 / ACMP1_P1 / I2C0_SDA / PWM0_CH1 / UART2_RXD / TM1 / INT1
4	PB.3 / ADC0_CH3 / ACMP0_N / I2C1_SCL / UART1_TXD / PWM0_CH2 / PWM0_BRAKE0 / TM2 / INT2
5	PB.2 / ADC0_CH2 / ACMP0_P1 / I2C1_SDA / UART1_RXD / PWM0_CH3 / TM3 / INT3

Pin	M031SE3AE Pin Function
6	PB.1 / ADC0_CH1 / UART2_TXD / I2C1_SCL / PWM0_CH4 / PWM1_CH4 / PWM0_BRAKE0
7	PB.0 / ADC0_CH0 / UART2_RXD / SPI0_I2SMCLK / I2C1_SDA / PWM0_CH5 / PWM1_CH5 / PWM0_BRAKE1
8	PA.11 / ACMP0_P0 / EBI_nRD / USCI0_CLK / TM0_EXT
9	PA.10 / ACMP1_P0 / EBI_nWR / USCI0_DAT0 / TM1_EXT
10	PA.9 / EBI_MCLK / USCI0_DAT1 / UART1_TXD / TM2_EXT
11	PA.8 / EBI_ALE / USCI0_CTL1 / UART1_RXD / TM3_EXT / INT4
12	PF.6 / EBI_ADR19 / SPI0_MOSI / EBI_nCS0
13	PF.14 / PWM1_BRAKE0 / PWM0_BRAKE0 / PWM0_CH4 / CLKO / TM3 / INT5
14	PF.5 / UART2_RXD / UART2_nCTS / PWM0_CH0 / X32_IN / ADC0_ST
15	PF.4 / UART2_TXD / UART2_nRTS / PWM0_CH1 / X32_OUT
16	PF.3 / EBI_nCS0 / UART0_TXD / I2C0_SCL / XT1_IN
17	PF.2 / EBI_nCS1 / UART0_RXD / I2C0_SDA / XT1_OUT
18	PC.7 / EBI_AD9 / UART0_nCTS / PWM1_CH2 / TM0 / INT3
19	PC.6 / EBI_AD8 / UART0_nRTS / PWM1_CH3 / TM1 / INT2
20	PA.7 / EBI_AD7 / UART0_TXD / I2C1_SCL / PWM1_CH4 / ACMP0_WLAT / TM2 / INT1
21	PA.6 / EBI_AD6 / UART0_RXD / I2C1_SDA / PWM1_CH5 / ACMP1_WLAT / TM3 / INT0
22	VSS
23	V_{DD}
24	PD.15 / PWM0_CH5 / TM3 / INT1
25	PA.5 / UART0_nCTS / UART0_TXD / I2C0_SCL / PWM0_CH0
26	PA.4 / SPI0_I2SMCLK / UART0_nRTS / UART0_RXD / I2C0_SDA / PWM0_CH1
27	PA.3 / SPI0_SS / UART1_TXD / I2C1_SCL / PWM0_CH2 / CLKO / PWM1_BRAKE1
28	PA.2 / SPI0_CLK / UART1_RXD / I2C1_SDA / PWM0_CH3
29	PA.1 / SPI0_MISO / UART0_TXD / UART1_nCTS / PWM0_CH4
30	PA.0 / SPI0_MOSI / UART0_RXD / UART1_nRTS / PWM0_CH5
31	PF.15 / PWM0_BRAKE0 / PWM0_CH1 / TM2 / CLKO / INT4
32	nRESET
33	PF.0 / UART1_TXD / I2C1_SCL / UART0_TXD / ICE_DAT
34	PF.1 / UART1_RXD / I2C1_SDA / UART0_RXD / ICE_CLK
35	PC.5 / EBI_AD5 / UART2_TXD / I2C1_SCL / PWM1_CH0
36	PC.4 / EBI_AD4 / UART2_RXD / I2C1_SDA / PWM1_CH1
37	PC.3 / EBI_AD3 / UART2_nRTS / PWM1_CH2
38	PC.2 / EBI_AD2 / UART2_nCTS / PWM1_CH3

Pin	M031SE3AE Pin Function
39	PC.1 / EBI_AD1 / UART2_TXD / I2C0_SCL / PWM1_CH4 / ACMP0_O
40	PC.0 / EBI_AD0 / UART2_RXD / I2C0_SDA / PWM1_CH5 / ACMP1_O
41	PD.3 / EBI_AD10 / USCI0_CTL1 / SPI0_SS / UART0_TXD
42	PD.2 / EBI_AD11 / USCI0_DAT1 / SPI0_CLK / UART0_RXD
43	PD.1 / EBI_AD12 / USCI0_DAT0 / SPI0_MISO
44	PD.0 / EBI_AD13 / USCI0_CLK / SPI0_MOSI / TM2
45	PA.12 / I2C1_SCL
46	PA.13 / I2C1_SDA
47	PA.14 / UART0_TXD
48	PA.15 / UART0_RXD
49	VSS
50	LDO_CAP
51	V_{DD}
52	PC.14 / EBI_AD11 / SPI0_I2SMCLK / USCI0_CTL0 / TM1
53	PB.15 / ADC0_CH15 / EBI_AD12 / SPI0_SS / USCI0_CTL1 / UART0_nCTS / PWM1_CH0 / TM0_EXT / PWM0_BRAKE1
54	PB.14 / ADC0_CH14 / EBI_AD13 / SPI0_CLK / USCI0_DAT1 / UART0_nRTS / PWM1_CH1 / TM1_EXT / CLKO
55	PB.13 / ADC0_CH13 / ACMP0_P3 / ACMP1_P3 / EBI_AD14 / SPI0_MISO / USCI0_DAT0 / UART0_TXD / PWM1_CH2 / TM2_EXT
56	PB.12 / ADC0_CH12 / ACMP0_P2 / ACMP1_P2 / EBI_AD15 / SPI0_MOSI / USCI0_CLK / UART0_RXD / PWM1_CH3 / TM3_EXT
57	AV_{DD}
58	V_{REF}
59	AVSS
60	PB.11 / ADC0_CH11 / EBI_ADR16 / UART0_nCTS / I2C1_SCL / SPI0_I2SMCLK
61	PB.10 / ADC0_CH10 / EBI_ADR17 / UART0_nRTS / I2C1_SDA
62	PB.9 / ADC0_CH9 / EBI_ADR18 / UART0_TXD / UART1_nCTS
63	PB.8 / ADC0_CH8 / EBI_ADR19 / UART0_RXD / UART1_nRTS
64	PB.7 / ADC0_CH7 / EBI_nWRL / UART1_TXD / EBI_nCS0 / PWM1_BRAKE0 / PWM1_CH4 / INT5 / ACMP0_O

Table 5.1-15 M031SE3AE Multi-function Pin Table

M031SG6AE

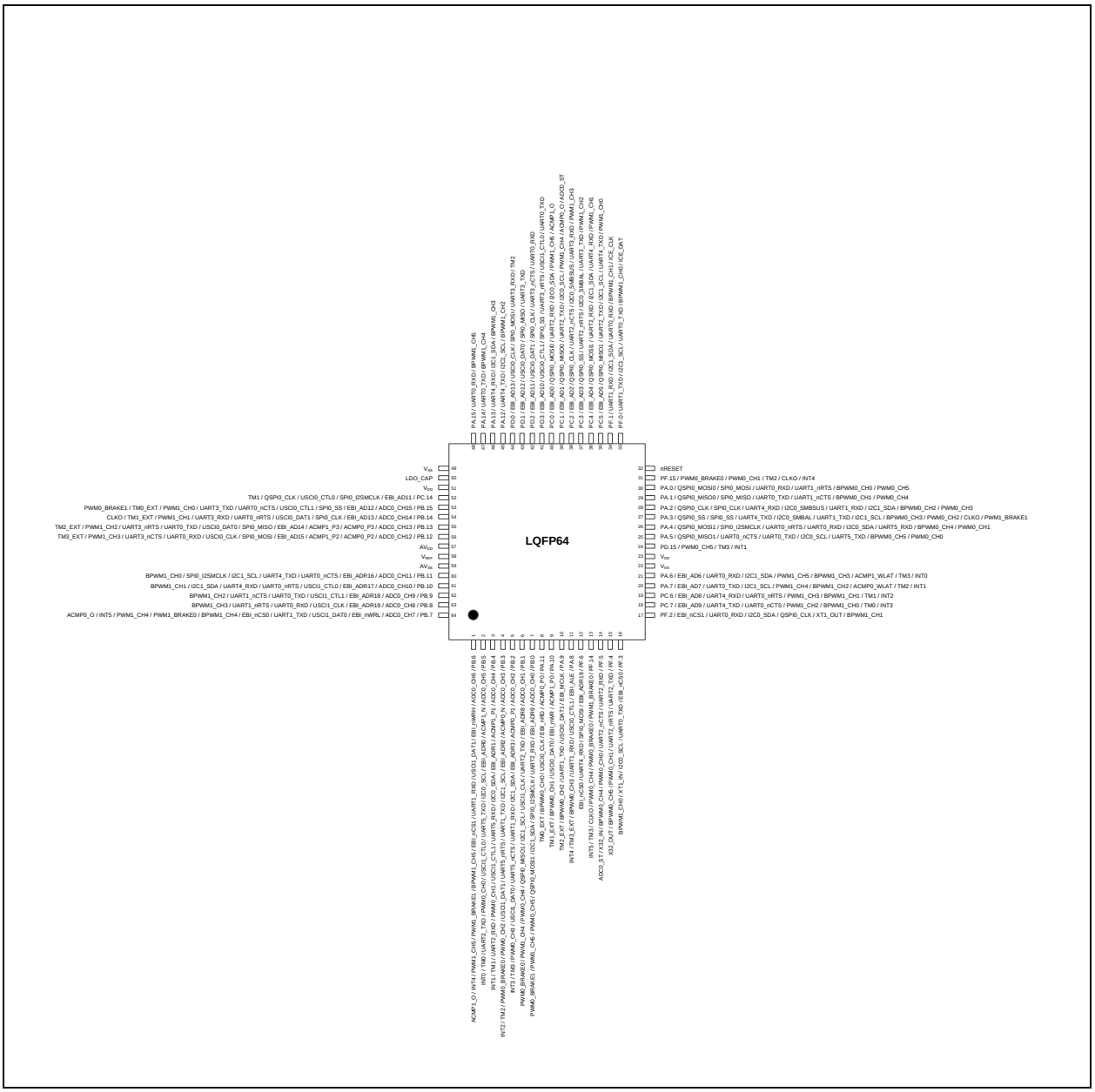

Figure 5.1-22 M031SG6AE Multi-function Pin Diagram

Pin	M031SG6AE Pin Function
1	PB.6 / ADC0_CH6 / EBI_nWRH / USCI1_DAT1 / UART1_RXD / EBI_nCS1 / BPWM1_CH5 / PWM1_BRAKE1 / PWM1_CH5 / INT4 / ACMP1_O
2	PB.5 / ADC0_CH5 / ACMP1_N / EBI_ADR0 / I2C0_SCL / UART5_TXD / USCI1_CTL0 / PWM0_CH0 / UART2_TXD / TM0 / INT0
3	PB.4 / ADC0_CH4 / ACMP1_P1 / EBI_ADR1 / I2C0_SDA / UART5_RXD / USCI1_CTL1 / PWM0_CH1 / UART2_RXD / TM1 / INT1

Pin	M031SG6AE Pin Function
4	PB.3 / ADC0_CH3 / ACMP0_N / EBI_ADR2 / I2C1_SCL / UART1_TXD / UART5_nRTS / USCI1_DAT1 / PWM0_CH2 / PWM0_BRAKE0 / TM2 / INT2
5	PB.2 / ADC0_CH2 / ACMP0_P1 / EBI_ADR3 / I2C1_SDA / UART1_RXD / UART5_nCTS / USCI1_DAT0 / PWM0_CH3 / TM3 / INT3
6	PB.1 / ADC0_CH1 / EBI_ADR8 / UART2_TXD / USCI1_CLK / I2C1_SCL / QSPI0_MISO1 / PWM0_CH4 / PWM1_CH4 / PWM0_BRAKE0
7	PB.0 / ADC0_CH0 / EBI_ADR9 / UART2_RXD / SPI0_I2SMCLK / I2C1_SDA / QSPI0_MOSI1 / PWM0_CH5 / PWM1_CH5 / PWM0_BRAKE1
8	PA.11 / ACMP0_P0 / EBI_nRD / USCI0_CLK / BPWM0_CH0 / TM0_EXT
9	PA.10 / ACMP1_P0 / EBI_nWR / USCI0_DAT0 / BPWM0_CH1 / TM1_EXT
10	PA.9 / EBI_MCLK / USCI0_DAT1 / UART1_TXD / BPWM0_CH2 / TM2_EXT
11	PA.8 / EBI_ALE / USCI0_CTL1 / UART1_RXD / BPWM0_CH3 / TM3_EXT / INT4
12	PF.6 / EBI_ADR19 / SPI0_MOSI / UART4_RXD / EBI_nCS0
13	PF.14 / PWM1_BRAKE0 / PWM0_BRAKE0 / PWM0_CH4 / CLKO / TM3 / INT5
14	PF.5 / UART2_RXD / UART2_nCTS / PWM0_CH0 / BPWM0_CH4 / X32_IN / ADC0_ST
15	PF.4 / UART2_TXD / UART2_nRTS / PWM0_CH1 / BPWM0_CH5 / X32_OUT
16	PF.3 / EBI_nCS0 / UART0_TXD / I2C0_SCL / XT1_IN / BPWM1_CH0
17	PF.2 / EBI_nCS1 / UART0_RXD / I2C0_SDA / QSPI0_CLK / XT1_OUT / BPWM1_CH1
18	PC.7 / EBI_AD9 / UART4_TXD / UART0_nCTS / PWM1_CH2 / BPWM1_CH0 / TM0 / INT3
19	PC.6 / EBI_AD8 / UART4_RXD / UART0_nRTS / PWM1_CH3 / BPWM1_CH1 / TM1 / INT2
20	PA.7 / EBI_AD7 / UART0_TXD / I2C1_SCL / PWM1_CH4 / BPWM1_CH2 / ACMP0_WLAT / TM2 / INT1
21	PA.6 / EBI_AD6 / UART0_RXD / I2C1_SDA / PWM1_CH5 / BPWM1_CH3 / ACMP1_WLAT / TM3 / INT0
22	VSS
23	V_{DD}
24	PD.15 / PWM0_CH5 / TM3 / INT1
25	PA.5 / QSPI0_MISO1 / UART0_nCTS / UART0_TXD / I2C0_SCL / UART5_TXD / BPWM0_CH5 / PWM0_CH0
26	PA.4 / QSPI0_MOSI1 / SPI0_I2SMCLK / UART0_nRTS / UART0_RXD / I2C0_SDA / UART5_RXD / BPWM0_CH4 / PWM0_CH1
27	PA.3 / QSPI0_SS / SPI0_SS / UART4_TXD / I2C0_SMBAL / UART1_TXD / I2C1_SCL / BPWM0_CH3 / PWM0_CH2 / CLKO / PWM1_BRAKE1
28	PA.2 / QSPI0_CLK / SPI0_CLK / UART4_RXD / I2C0_SMBSUS / UART1_RXD / I2C1_SDA / BPWM0_CH2 / PWM0_CH3
29	PA.1 / QSPI0_MISO0 / SPI0_MISO / UART0_TXD / UART1_nCTS / BPWM0_CH1 / PWM0_CH4
30	PA.0 / QSPI0_MOSI0 / SPI0_MOSI / UART0_RXD / UART1_nRTS / BPWM0_CH0 / PWM0_CH5
31	PF.15 / PWM0_BRAKE0 / PWM0_CH1 / TM2 / CLKO / INT4
32	nRESET
33	PF.0 / UART1_TXD / I2C1_SCL / UART0_TXD / BPWM1_CH0 / ICE_DAT

Pin	M031SG6AE Pin Function
34	PF.1 / UART1_RXD / I2C1_SDA / UART0_RXD / BPWM1_CH1 / ICE_CLK
35	PC.5 / EBI_AD5 / QSPI0_MISO1 / UART2_TXD / I2C1_SCL / UART4_TXD / PWM1_CH0
36	PC.4 / EBI_AD4 / QSPI0_MOSI1 / UART2_RXD / I2C1_SDA / UART4_RXD / PWM1_CH1
37	PC.3 / EBI_AD3 / QSPI0_SS / UART2_nRTS / I2C0_SMBAL / UART3_TXD / PWM1_CH2
38	PC.2 / EBI_AD2 / QSPI0_CLK / UART2_nCTS / I2C0_SMBSUS / UART3_RXD / PWM1_CH3
39	PC.1 / EBI_AD1 / QSPI0_MISO0 / UART2_TXD / I2C0_SCL / PWM1_CH4 / ACMP0_O / ADC0_ST
40	PC.0 / EBI_AD0 / QSPI0_MOSI0 / UART2_RXD / I2C0_SDA / PWM1_CH5 / ACMP1_O
41	PD.3 / EBI_AD10 / USCI0_CTL1 / SPI0_SS / UART3_nRTS / USCI1_CTL0 / UART0_TXD
42	PD.2 / EBI_AD11 / USCI0_DAT1 / SPI0_CLK / UART3_nCTS / UART0_RXD
43	PD.1 / EBI_AD12 / USCI0_DAT0 / SPI0_MISO / UART3_TXD
44	PD.0 / EBI_AD13 / USCI0_CLK / SPI0_MOSI / UART3_RXD / TM2
45	PA.12 / UART4_TXD / I2C1_SCL / BPWM1_CH2
46	PA.13 / UART4_RXD / I2C1_SDA / BPWM1_CH3
47	PA.14 / UART0_TXD / BPWM1_CH4
48	PA.15 / UART0_RXD / BPWM1_CH5
49	VSS
50	LDO_CAP
51	V_{DD}
52	PC.14 / EBI_AD11 / SPI0_I2SMCLK / USCI0_CTL0 / QSPI0_CLK / TM1
53	PB.15 / ADC0_CH15 / EBI_AD12 / SPI0_SS / USCI0_CTL1 / UART0_nCTS / UART3_TXD / PWM1_CH0 / TM0_EXT / PWM0_BRAKE1
54	PB.14 / ADC0_CH14 / EBI_AD13 / SPI0_CLK / USCI0_DAT1 / UART0_nRTS / UART3_RXD / PWM1_CH1 / TM1_EXT / CLKO
55	PB.13 / ADC0_CH13 / ACMP0_P3 / ACMP1_P3 / EBI_AD14 / SPI0_MISO / USCI0_DAT0 / UART0_TXD / UART3_nRTS / PWM1_CH2 / TM2_EXT
56	PB.12 / ADC0_CH12 / ACMP0_P2 / ACMP1_P2 / EBI_AD15 / SPI0_MOSI / USCI0_CLK / UART0_RXD / UART3_nCTS / PWM1_CH3 / TM3_EXT
57	AV_{DD}
58	V_{REF}
59	AVSS
60	PB.11 / ADC0_CH11 / EBI_ADR16 / UART0_nCTS / UART4_TXD / I2C1_SCL / SPI0_I2SMCLK / BPWM1_CH0
61	PB.10 / ADC0_CH10 / EBI_ADR17 / USCI1_CTL0 / UART0_nRTS / UART4_RXD / I2C1_SDA / BPWM1_CH1
62	PB.9 / ADC0_CH9 / EBI_ADR18 / USCI1_CTL1 / UART0_TXD / UART1_nCTS / BPWM1_CH2
63	PB.8 / ADC0_CH8 / EBI_ADR19 / USCI1_CLK / UART0_RXD / UART1_nRTS / BPWM1_CH3
64	PB.7 / ADC0_CH7 / EBI_nWRL / USCI1_DAT0 / UART1_TXD / EBI_nCS0 / BPWM1_CH4 / PWM1_BRAKE0 / PWM1_CH4 / INT5 / ACMP0_O

Table 5.1-16 M031SG6AE Multi-function Pin Table

M031SG8AE

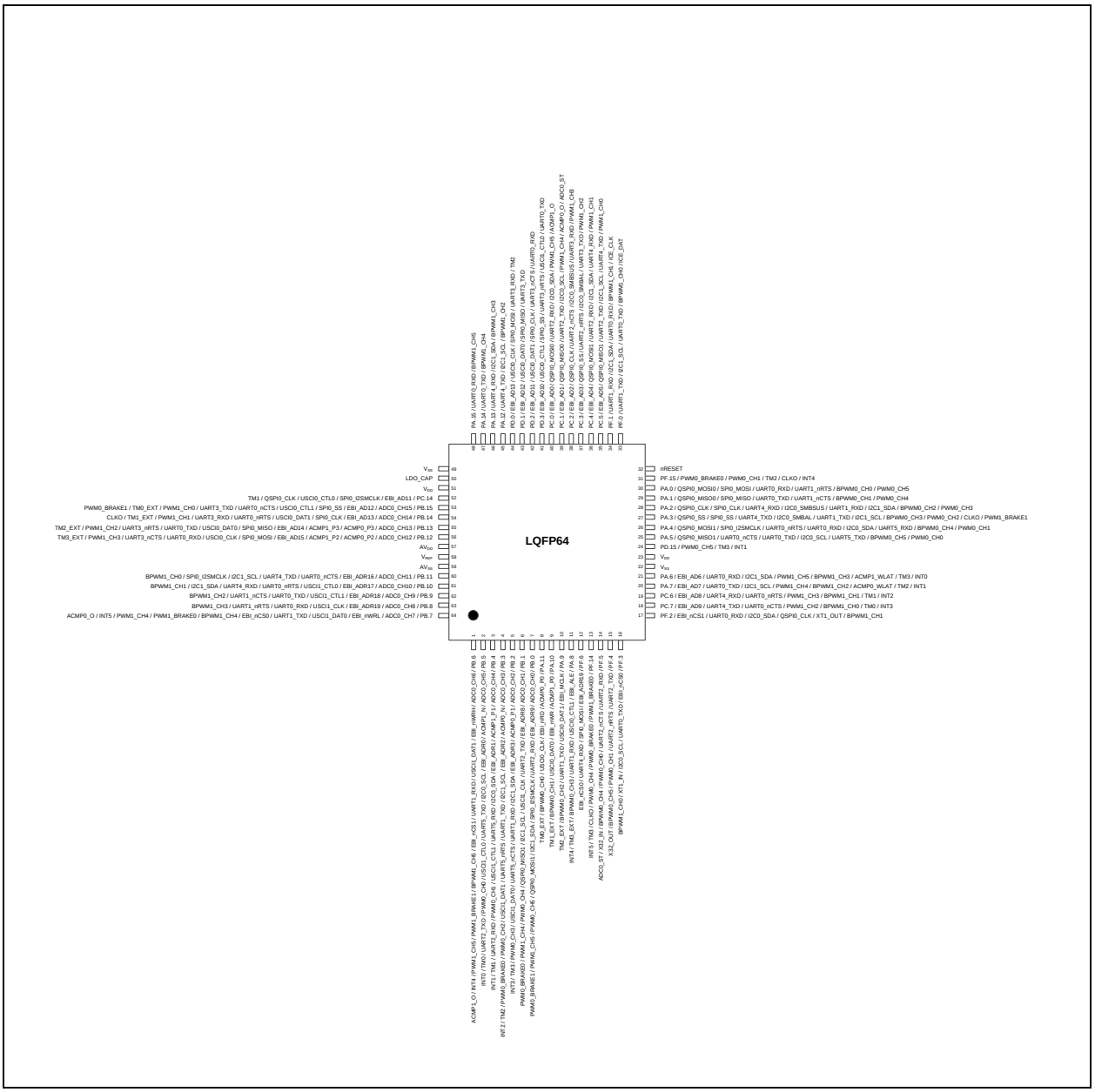

Figure 5.1-23 M031SG8AE Multi-function Pin Diagram

Pin	M031SG8AE Pin Function
1	PB.6 / ADC0_CH6 / EBI_nWRH / USCI1_DAT1 / UART1_RXD / EBI_nCS1 / BPWM1_CH5 / PWM1_BRAKE1 / PWM1_CH5 / INT4 / ACMP1_O
2	PB.5 / ADC0_CH5 / ACMP1_N / EBI_ADR0 / I2C0_SCL / UART5_TXD / USCI1_CTL0 / PWM0_CH0 / UART2_TXD / TM0 / INT0

Pin	M031SG8AE Pin Function
3	PB.4 / ADC0_CH4 / ACMP1_P1 / EBI_ADR1 / I2C0_SDA / UART5_RXD / USCI1_CTL1 / PWM0_CH1 / UART2_RXD / TM1 / INT1
4	PB.3 / ADC0_CH3 / ACMP0_N / EBI_ADR2 / I2C1_SCL / UART1_TXD / UART5_nRTS / USCI1_DAT1 / PWM0_CH2 / PWM0_BRAKE0 / TM2 / INT2
5	PB.2 / ADC0_CH2 / ACMP0_P1 / EBI_ADR3 / I2C1_SDA / UART1_RXD / UART5_nCTS / USCI1_DAT0 / PWM0_CH3 / TM3 / INT3
6	PB.1 / ADC0_CH1 / EBI_ADR8 / UART2_TXD / USCI1_CLK / I2C1_SCL / QSPI0_MISO1 / PWM0_CH4 / PWM1_CH4 / PWM0_BRAKE0
7	PB.0 / ADC0_CH0 / EBI_ADR9 / UART2_RXD / SPI0_I2SMCLK / I2C1_SDA / QSPI0_MOSI1 / PWM0_CH5 / PWM1_CH5 / PWM0_BRAKE1
8	PA.11 / ACMP0_P0 / EBI_nRD / USCI0_CLK / BPWM0_CH0 / TM0_EXT
9	PA.10 / ACMP1_P0 / EBI_nWR / USCI0_DAT0 / BPWM0_CH1 / TM1_EXT
10	PA.9 / EBI_MCLK / USCI0_DAT1 / UART1_TXD / BPWM0_CH2 / TM2_EXT
11	PA.8 / EBI_ALE / USCI0_CTL1 / UART1_RXD / BPWM0_CH3 / TM3_EXT / INT4
12	PF.6 / EBI_ADR19 / SPI0_MOSI / UART4_RXD / EBI_nCS0
13	PF.14 / PWM1_BRAKE0 / PWM0_BRAKE0 / PWM0_CH4 / CLKO / TM3 / INT5
14	PF.5 / UART2_RXD / UART2_nCTS / PWM0_CH0 / BPWM0_CH4 / X32_IN / ADC0_ST
15	PF.4 / UART2_TXD / UART2_nRTS / PWM0_CH1 / BPWM0_CH5 / X32_OUT
16	PF.3 / EBI_nCS0 / UART0_TXD / I2C0_SCL / XT1_IN / BPWM1_CH0
17	PF.2 / EBI_nCS1 / UART0_RXD / I2C0_SDA / QSPI0_CLK / XT1_OUT / BPWM1_CH1
18	PC.7 / EBI_AD9 / UART4_TXD / UART0_nCTS / PWM1_CH2 / BPWM1_CH0 / TM0 / INT3
19	PC.6 / EBI_AD8 / UART4_RXD / UART0_nRTS / PWM1_CH3 / BPWM1_CH1 / TM1 / INT2
20	PA.7 / EBI_AD7 / UART0_TXD / I2C1_SCL / PWM1_CH4 / BPWM1_CH2 / ACMP0_WLAT / TM2 / INT1
21	PA.6 / EBI_AD6 / UART0_RXD / I2C1_SDA / PWM1_CH5 / BPWM1_CH3 / ACMP1_WLAT / TM3 / INT0
22	VSS
23	V_{DD}
24	PD.15 / PWM0_CH5 / TM3 / INT1
25	PA.5 / QSPI0_MISO1 / UART0_nCTS / UART0_TXD / I2C0_SCL / UART5_TXD / BPWM0_CH5 / PWM0_CH0
26	PA.4 / QSPI0_MOSI1 / SPI0_I2SMCLK / UART0_nRTS / UART0_RXD / I2C0_SDA / UART5_RXD / BPWM0_CH4 / PWM0_CH1
27	PA.3 / QSPI0_SS / SPI0_SS / UART4_TXD / I2C0_SMBAL / UART1_TXD / I2C1_SCL / BPWM0_CH3 / PWM0_CH2 / CLKO / PWM1_BRAKE1
28	PA.2 / QSPI0_CLK / SPI0_CLK / UART4_RXD / I2C0_SMBSUS / UART1_RXD / I2C1_SDA / BPWM0_CH2 / PWM0_CH3
29	PA.1 / QSPI0_MISO0 / SPI0_MISO / UART0_TXD / UART1_nCTS / BPWM0_CH1 / PWM0_CH4
30	PA.0 / QSPI0_MOSI0 / SPI0_MOSI / UART0_RXD / UART1_nRTS / BPWM0_CH0 / PWM0_CH5
31	PF.15 / PWM0_BRAKE0 / PWM0_CH1 / TM2 / CLKO / INT4

Pin	M031SG8AE Pin Function
32	nRESET
33	PF.0 / UART1_TXD / I2C1_SCL / UART0_TXD / BPWM1_CH0 / ICE_DAT
34	PF.1 / UART1_RXD / I2C1_SDA / UART0_RXD / BPWM1_CH1 / ICE_CLK
35	PC.5 / EBI_AD5 / QSPI0_MISO1 / UART2_TXD / I2C1_SCL / UART4_TXD / PWM1_CH0
36	PC.4 / EBI_AD4 / QSPI0_MOSI1 / UART2_RXD / I2C1_SDA / UART4_RXD / PWM1_CH1
37	PC.3 / EBI_AD3 / QSPI0_SS / UART2_nRTS / I2C0_SMBAL / UART3_TXD / PWM1_CH2
38	PC.2 / EBI_AD2 / QSPI0_CLK / UART2_nCTS / I2C0_SMBSUS / UART3_RXD / PWM1_CH3
39	PC.1 / EBI_AD1 / QSPI0_MISO0 / UART2_TXD / I2C0_SCL / PWM1_CH4 / ACMP0_O / ADC0_ST
40	PC.0 / EBI_AD0 / QSPI0_MOSI0 / UART2_RXD / I2C0_SDA / PWM1_CH5 / ACMP1_O
41	PD.3 / EBI_AD10 / USCI0_CTL1 / SPI0_SS / UART3_nRTS / USCI1_CTL0 / UART0_TXD
42	PD.2 / EBI_AD11 / USCI0_DAT1 / SPI0_CLK / UART3_nCTS / UART0_RXD
43	PD.1 / EBI_AD12 / USCI0_DAT0 / SPI0_MISO / UART3_TXD
44	PD.0 / EBI_AD13 / USCI0_CLK / SPI0_MOSI / UART3_RXD / TM2
45	PA.12 / UART4_TXD / I2C1_SCL / BPWM1_CH2
46	PA.13 / UART4_RXD / I2C1_SDA / BPWM1_CH3
47	PA.14 / UART0_TXD / BPWM1_CH4
48	PA.15 / UART0_RXD / BPWM1_CH5
49	VSS
50	LDO_CAP
51	V_{DD}
52	PC.14 / EBI_AD11 / SPI0_I2SMCLK / USCI0_CTL0 / QSPI0_CLK / TM1
53	PB.15 / ADC0_CH15 / EBI_AD12 / SPI0_SS / USCI0_CTL1 / UART0_nCTS / UART3_TXD / PWM1_CH0 / TM0_EXT / PWM0_BRAKE1
54	PB.14 / ADC0_CH14 / EBI_AD13 / SPI0_CLK / USCI0_DAT1 / UART0_nRTS / UART3_RXD / PWM1_CH1 / TM1_EXT / CLKO
55	PB.13 / ADC0_CH13 / ACMP0_P3 / ACMP1_P3 / EBI_AD14 / SPI0_MISO / USCI0_DAT0 / UART0_TXD / UART3_nRTS / PWM1_CH2 / TM2_EXT
56	PB.12 / ADC0_CH12 / ACMP0_P2 / ACMP1_P2 / EBI_AD15 / SPI0_MOSI / USCI0_CLK / UART0_RXD / UART3_nCTS / PWM1_CH3 / TM3_EXT
57	AV_{DD}
58	V_{REF}
59	AVSS
60	PB.11 / ADC0_CH11 / EBI_ADR16 / UART0_nCTS / UART4_TXD / I2C1_SCL / SPI0_I2SMCLK / BPWM1_CH0
61	PB.10 / ADC0_CH10 / EBI_ADR17 / USCI1_CTL0 / UART0_nRTS / UART4_RXD / I2C1_SDA / BPWM1_CH1
62	PB.9 / ADC0_CH9 / EBI_ADR18 / USCI1_CTL1 / UART0_TXD / UART1_nCTS / BPWM1_CH2

Pin	M031SG8AE Pin Function
63	PB.8 / ADC0_CH8 / EBI_ADR19 / USCI1_CLK / UART0_RXD / UART1_nRTS / BPWM1_CH3
64	PB.7 / ADC0_CH7 / EBI_nWRL / USCI1_DAT0 / UART1_TXD / EBI_nCS0 / BPWM1_CH4 / PWM1_BRAKE0 / PWM1_CH4 / INT5 / ACMP0_O

Table 5.1-17 M031SG8AE Multi-function Pin Table

M031SIAAE

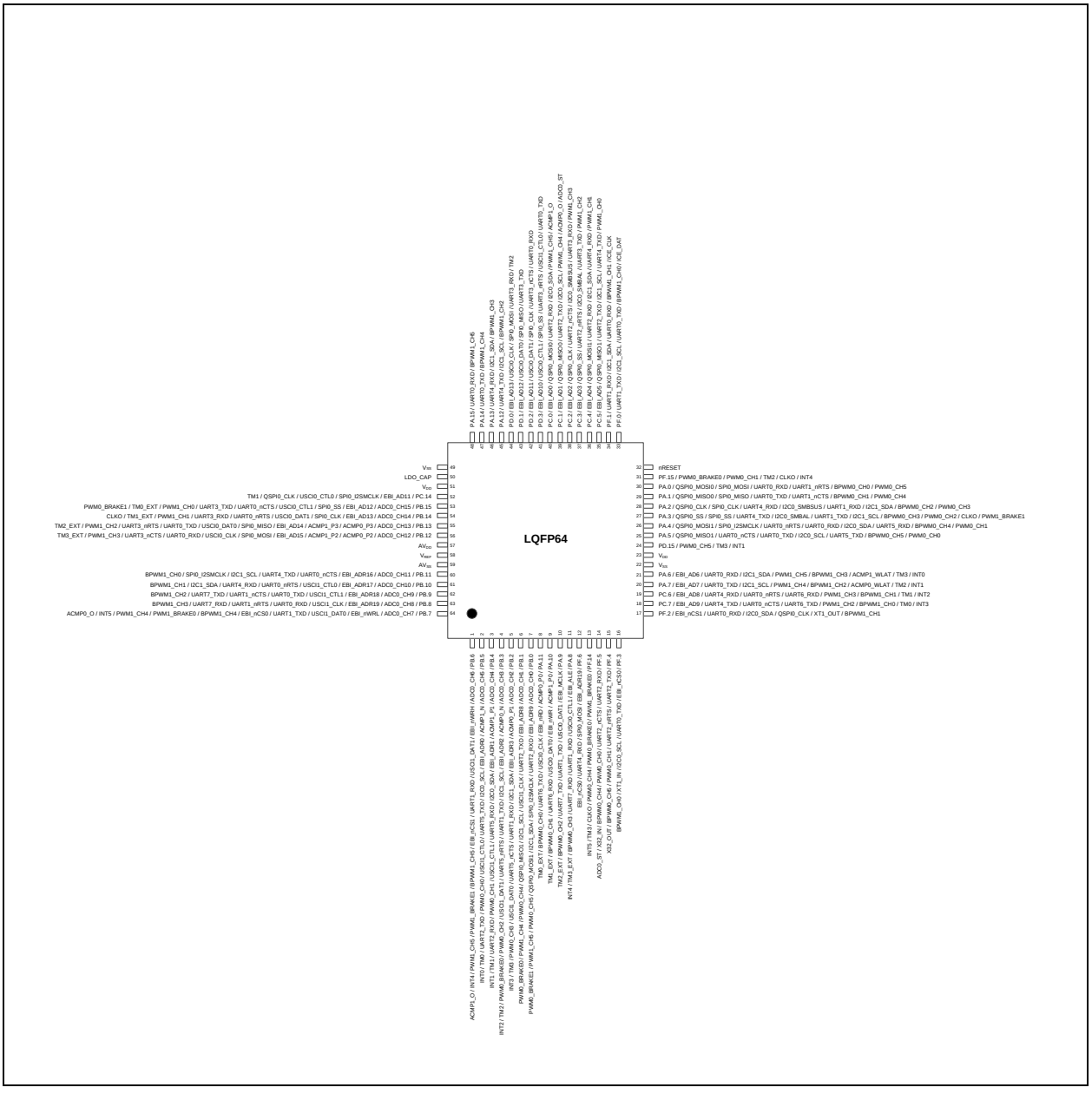

Figure 5.1-24 M031SIAAE Multi-function Pin Diagram

Pin	M031SIAAE Pin Function
1	PB.6 / ADC0_CH6 / EBI_nWRH / USCI1_DAT1 / UART1_RXD / EBI_nCS1 / BPWM1_CH5 / PWM1_BRAKE1 / PWM1_CH5 / INT4 / ACMP1_O
2	PB.5 / ADC0_CH5 / ACMP1_N / EBI_ADR0 / I2C0_SCL / UART5_TXD / USCI1_CTL0 / PWM0_CH0 / UART2_TXD / TM0 / INT0
3	PB.4 / ADC0_CH4 / ACMP1_P1 / EBI_ADR1 / I2C0_SDA / UART5_RXD / USCI1_CTL1 / PWM0_CH1 / UART2_RXD / TM1 / INT1
4	PB.3 / ADC0_CH3 / ACMP0_N / EBI_ADR2 / I2C1_SCL / UART1_TXD / UART5_nRTS / USCI1_DAT1 / PWM0_CH2 / PWM0_BRAKE0 / TM2 / INT2
5	PB.2 / ADC0_CH2 / ACMP0_P1 / EBI_ADR3 / I2C1_SDA / UART1_RXD / UART5_nCTS / USCI1_DAT0 / PWM0_CH3 / TM3 / INT3
6	PB.1 / ADC0_CH1 / EBI_ADR8 / UART2_TXD / USCI1_CLK / I2C1_SCL / QSPI0_MISO1 / PWM0_CH4 / PWM1_CH4 / PWM0_BRAKE0
7	PB.0 / ADC0_CH0 / EBI_ADR9 / UART2_RXD / SPI0_I2SMCLK / I2C1_SDA / QSPI0_MOSI1 / PWM0_CH5 / PWM1_CH5 / PWM0_BRAKE1
8	PA.11 / ACMP0_P0 / EBI_nRD / USCI0_CLK / UART6_TXD / BPWM0_CH0 / TM0_EXT
9	PA.10 / ACMP1_P0 / EBI_nWR / USCI0_DAT0 / UART6_RXD / BPWM0_CH1 / TM1_EXT
10	PA.9 / EBI_MCLK / USCI0_DAT1 / UART1_TXD / UART7_TXD / BPWM0_CH2 / TM2_EXT
11	PA.8 / EBI_ALE / USCI0_CTL1 / UART1_RXD / UART7_RXD / BPWM0_CH3 / TM3_EXT / INT4
12	PF.6 / EBI_ADR19 / SPI0_MOSI / UART4_RXD / EBI_nCS0
13	PF.14 / PWM1_BRAKE0 / PWM0_BRAKE0 / PWM0_CH4 / CLKO / TM3 / INT5
14	PF.5 / UART2_RXD / UART2_nCTS / PWM0_CH0 / BPWM0_CH4 / X32_IN / ADC0_ST
15	PF.4 / UART2_TXD / UART2_nRTS / PWM0_CH1 / BPWM0_CH5 / X32_OUT
16	PF.3 / EBI_nCS0 / UART0_TXD / I2C0_SCL / XT1_IN / BPWM1_CH0
17	PF.2 / EBI_nCS1 / UART0_RXD / I2C0_SDA / QSPI0_CLK / XT1_OUT / BPWM1_CH1
18	PC.7 / EBI_AD9 / UART4_TXD / UART0_nCTS / UART6_TXD / PWM1_CH2 / BPWM1_CH0 / TM0 / INT3
19	PC.6 / EBI_AD8 / UART4_RXD / UART0_nRTS / UART6_RXD / PWM1_CH3 / BPWM1_CH1 / TM1 / INT2
20	PA.7 / EBI_AD7 / UART0_TXD / I2C1_SCL / PWM1_CH4 / BPWM1_CH2 / ACMP0_WLAT / TM2 / INT1
21	PA.6 / EBI_AD6 / UART0_RXD / I2C1_SDA / PWM1_CH5 / BPWM1_CH3 / ACMP1_WLAT / TM3 / INT0
22	VSS
23	V_{DD}
24	PD.15 / PWM0_CH5 / TM3 / INT1
25	PA.5 / QSPI0_MISO1 / UART0_nCTS / UART0_TXD / I2C0_SCL / UART5_TXD / BPWM0_CH5 / PWM0_CH0
26	PA.4 / QSPI0_MOSI1 / SPI0_I2SMCLK / UART0_nRTS / UART0_RXD / I2C0_SDA / UART5_RXD / BPWM0_CH4 / PWM0_CH1
27	PA.3 / QSPI0_SS / SPI0_SS / UART4_TXD / I2C0_SMBAL / UART1_TXD / I2C1_SCL / BPWM0_CH3 / PWM0_CH2 / CLKO / PWM1_BRAKE1
28	PA.2 / QSPI0_CLK / SPI0_CLK / UART4_RXD / I2C0_SMBSUS / UART1_RXD / I2C1_SDA / BPWM0_CH2 / PWM0_CH3

Pin	M031SIAAE Pin Function
29	PA.1 / QSPI0_MISO0 / SPI0_MISO / UART0_TXD / UART1_nCTS / BPWM0_CH1 / PWM0_CH4
30	PA.0 / QSPI0_MOSI0 / SPI0_MOSI / UART0_RXD / UART1_nRTS / BPWM0_CH0 / PWM0_CH5
31	PF.15 / PWM0_BRAKE0 / PWM0_CH1 / TM2 / CLKO / INT4
32	nRESET
33	PF.0 / UART1_TXD / I2C1_SCL / UART0_TXD / BPWM1_CH0 / ICE_DAT
34	PF.1 / UART1_RXD / I2C1_SDA / UART0_RXD / BPWM1_CH1 / ICE_CLK
35	PC.5 / EBI_AD5 / QSPI0_MISO1 / UART2_TXD / I2C1_SCL / UART4_TXD / PWM1_CH0
36	PC.4 / EBI_AD4 / QSPI0_MOSI1 / UART2_RXD / I2C1_SDA / UART4_RXD / PWM1_CH1
37	PC.3 / EBI_AD3 / QSPI0_SS / UART2_nRTS / I2C0_SMBAL / UART3_TXD / PWM1_CH2
38	PC.2 / EBI_AD2 / QSPI0_CLK / UART2_nCTS / I2C0_SMBSUS / UART3_RXD / PWM1_CH3
39	PC.1 / EBI_AD1 / QSPI0_MISO0 / UART2_TXD / I2C0_SCL / PWM1_CH4 / ACMP0_O / ADC0_ST
40	PC.0 / EBI_AD0 / QSPI0_MOSI0 / UART2_RXD / I2C0_SDA / PWM1_CH5 / ACMP1_O
41	PD.3 / EBI_AD10 / USCI0_CTL1 / SPI0_SS / UART3_nRTS / USCI1_CTL0 / UART0_TXD
42	PD.2 / EBI_AD11 / USCI0_DAT1 / SPI0_CLK / UART3_nCTS / UART0_RXD
43	PD.1 / EBI_AD12 / USCI0_DAT0 / SPI0_MISO / UART3_TXD
44	PD.0 / EBI_AD13 / USCI0_CLK / SPI0_MOSI / UART3_RXD / TM2
45	PA.12 / UART4_TXD / I2C1_SCL / BPWM1_CH2
46	PA.13 / UART4_RXD / I2C1_SDA / BPWM1_CH3
47	PA.14 / UART0_TXD / BPWM1_CH4
48	PA.15 / UART0_RXD / BPWM1_CH5
49	VSS
50	LDO_CAP
51	V_{DD}
52	PC.14 / EBI_AD11 / SPI0_I2SMCLK / USCI0_CTL0 / QSPI0_CLK / TM1
53	PB.15 / ADC0_CH15 / EBI_AD12 / SPI0_SS / USCI0_CTL1 / UART0_nCTS / UART3_TXD / PWM1_CH0 / TM0_EXT / PWM0_BRAKE1
54	PB.14 / ADC0_CH14 / EBI_AD13 / SPI0_CLK / USCI0_DAT1 / UART0_nRTS / UART3_RXD / PWM1_CH1 / TM1_EXT / CLKO
55	PB.13 / ADC0_CH13 / ACMP0_P3 / ACMP1_P3 / EBI_AD14 / SPI0_MISO / USCI0_DAT0 / UART0_TXD / UART3_nRTS / PWM1_CH2 / TM2_EXT
56	PB.12 / ADC0_CH12 / ACMP0_P2 / ACMP1_P2 / EBI_AD15 / SPI0_MOSI / USCI0_CLK / UART0_RXD / UART3_nCTS / PWM1_CH3 / TM3_EXT
57	AV_{DD}
58	V_{REF}
59	AVSS

Pin	M031SIAAE Pin Function
60	PB.11 / ADC0_CH11 / EBI_ADR16 / UART0_nCTS / UART4_TXD / I2C1_SCL / SPI0_I2SMCLK / BPWM1_CH0
61	PB.10 / ADC0_CH10 / EBI_ADR17 / USCI1_CTL0 / UART0_nRTS / UART4_RXD / I2C1_SDA / BPWM1_CH1
62	PB.9 / ADC0_CH9 / EBI_ADR18 / USCI1_CTL1 / UART0_TXD / UART1_nCTS / UART7_TXD / BPWM1_CH2
63	PB.8 / ADC0_CH8 / EBI_ADR19 / USCI1_CLK / UART0_RXD / UART1_nRTS / UART7_RXD / BPWM1_CH3
64	PB.7 / ADC0_CH7 / EBI_nWRL / USCI1_DAT0 / UART1_TXD / EBI_nCS0 / BPWM1_CH4 / PWM1_BRAKE0 / PWM1_CH4 / INT5 / ACMP0_O

Table 5.1-18 M031SIAAE Multi-function Pin Table

5.1.2.6 M031 Series LQFP 128-Pin Multi-function Pin Diagram

Corresponding Part Number: M031KG6AE, M031KG8AE, M031KIAAE

M031KG6AE

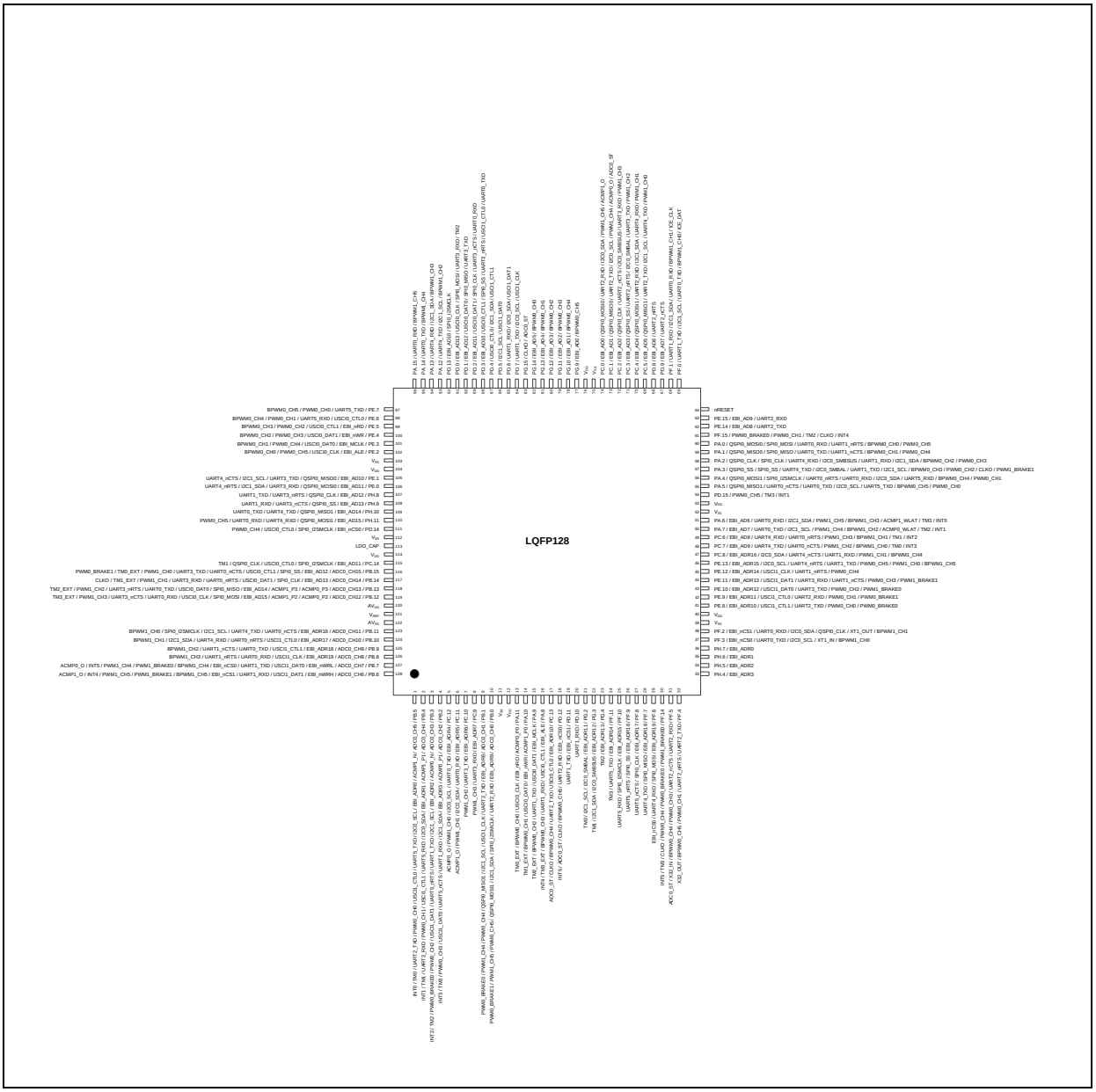

Figure 5.1-25 M031KG6AE Multi-function Pin Diagram

Pin	M031KG6AE Pin Function
1	PB.5 / ADC0_CH5 / ACMP1_N / EBI_ADR0 / I2C0_SCL / UART5_TXD / USCI1_CTL0 / PWM0_CH0 / UART2_TXD / TM0 / INT0
2	PB.4 / ADC0_CH4 / ACMP1_P1 / EBI_ADR1 / I2C0_SDA / UART5_RXD / USCI1_CTL1 / PWM0_CH1 / UART2_RXD / TM1 / INT1

Pin	M031KG6AE Pin Function
3	PB.3 / ADC0_CH3 / ACMP0_N / EBI_ADR2 / I2C1_SCL / UART1_TXD / UART5_nRTS / USCI1_DAT1 / PWM0_CH2 / PWM0_BRAKE0 / TM2 / INT2
4	PB.2 / ADC0_CH2 / ACMP0_P1 / EBI_ADR3 / I2C1_SDA / UART1_RXD / UART5_nCTS / USCI1_DAT0 / PWM0_CH3 / TM3 / INT3
5	PC.12 / EBI_ADR4 / UART0_TXD / I2C0_SCL / PWM1_CH0 / ACMP0_O
6	PC.11 / EBI_ADR5 / UART0_RXD / I2C0_SDA / PWM1_CH1 / ACMP1_O
7	PC.10 / EBI_ADR6 / UART3_TXD / PWM1_CH2
8	PC.9 / EBI_ADR7 / UART3_RXD / PWM1_CH3
9	PB.1 / ADC0_CH1 / EBI_ADR8 / UART2_TXD / USCI1_CLK / I2C1_SCL / QSPI0_MISO1 / PWM0_CH4 / PWM1_CH4 / PWM0_BRAKE0
10	PB.0 / ADC0_CH0 / EBI_ADR9 / UART2_RXD / SPI0_I2SMCLK / I2C1_SDA / QSPI0_MOSI1 / PWM0_CH5 / PWM1_CH5 / PWM0_BRAKE1
11	VSS
12	V_{DD}
13	PA.11 / ACMP0_P0 / EBI_nRD / USCI0_CLK / BPWM0_CH0 / TM0_EXT
14	PA.10 / ACMP1_P0 / EBI_nWR / USCI0_DAT0 / BPWM0_CH1 / TM1_EXT
15	PA.9 / EBI_MCLK / USCI0_DAT1 / UART1_TXD / BPWM0_CH2 / TM2_EXT
16	PA.8 / EBI_ALE / USCI0_CTL1 / UART1_RXD / BPWM0_CH3 / TM3_EXT / INT4
17	PC.13 / EBI_ADR10 / USCI0_CTL0 / UART2_TXD / BPWM0_CH4 / CLKO / ADC0_ST
18	PD.12 / EBI_nCS0 / UART2_RXD / BPWM0_CH5 / CLKO / ADC0_ST / INT5
19	PD.11 / EBI_nCS1 / UART1_TXD
20	PD.10 / UART1_RXD
21	PG.2 / EBI_ADR11 / I2C0_SMBAL / I2C1_SCL / TM0
22	PG.3 / EBI_ADR12 / I2C0_SMBSUS / I2C1_SDA / TM1
23	PG.4 / EBI_ADR13 / TM2
24	PF.11 / EBI_ADR14 / UART5_TXD / TM3
25	PF.10 / EBI_ADR15 / SPI0_I2SMCLK / UART5_RXD
26	PF.9 / EBI_ADR16 / SPI0_SS / UART5_nRTS
27	PF.8 / EBI_ADR17 / SPI0_CLK / UART5_nCTS
28	PF.7 / EBI_ADR18 / SPI0_MISO / UART4_TXD
29	PF.6 / EBI_ADR19 / SPI0_MOSI / UART4_RXD / EBI_nCS0
30	PF.14 / PWM1_BRAKE0 / PWM0_BRAKE0 / PWM0_CH4 / CLKO / TM3 / INT5
31	PF.5 / UART2_RXD / UART2_nCTS / PWM0_CH0 / BPWM0_CH4 / X32_IN / ADC0_ST
32	PF.4 / UART2_TXD / UART2_nRTS / PWM0_CH1 / BPWM0_CH5 / X32_OUT
33	PH.4 / EBI_ADR3

Pin	M031KG6AE Pin Function
34	PH.5 / EBI_ADR2
35	PH.6 / EBI_ADR1
36	PH.7 / EBI_ADR0
37	PF.3 / EBI_nCS0 / UART0_TXD / I2C0_SCL / XT1_IN / BPWM1_CH0
38	PF.2 / EBI_nCS1 / UART0_RXD / I2C0_SDA / QSPI0_CLK / XT1_OUT / BPWM1_CH1
39	VSS
40	V_{DD}
41	PE.8 / EBI_ADR10 / USCI1_CTL1 / UART2_TXD / PWM0_CH0 / PWM0_BRAKE0
42	PE.9 / EBI_ADR11 / USCI1_CTL0 / UART2_RXD / PWM0_CH1 / PWM0_BRAKE1
43	PE.10 / EBI_ADR12 / USCI1_DAT0 / UART3_TXD / PWM0_CH2 / PWM1_BRAKE0
44	PE.11 / EBI_ADR13 / USCI1_DAT1 / UART3_RXD / UART1_nCTS / PWM0_CH3 / PWM1_BRAKE1
45	PE.12 / EBI_ADR14 / USCI1_CLK / UART1_nRTS / PWM0_CH4
46	PE.13 / EBI_ADR15 / I2C0_SCL / UART4_nRTS / UART1_TXD / PWM0_CH5 / PWM1_CH0 / BPWM1_CH5
47	PC.8 / EBI_ADR16 / I2C0_SDA / UART4_nCTS / UART1_RXD / PWM1_CH1 / BPWM1_CH4
48	PC.7 / EBI_AD9 / UART4_TXD / UART0_nCTS / PWM1_CH2 / BPWM1_CH0 / TM0 / INT3
49	PC.6 / EBI_AD8 / UART4_RXD / UART0_nRTS / PWM1_CH3 / BPWM1_CH1 / TM1 / INT2
50	PA.7 / EBI_AD7 / UART0_TXD / I2C1_SCL / PWM1_CH4 / BPWM1_CH2 / ACMP0_WLAT / TM2 / INT1
51	PA.6 / EBI_AD6 / UART0_RXD / I2C1_SDA / PWM1_CH5 / BPWM1_CH3 / ACMP1_WLAT / TM3 / INT0
52	VSS
53	V_{DD}
54	PD.15 / PWM0_CH5 / TM3 / INT1
55	PA.5 / QSPI0_MISO1 / UART0_nCTS / UART0_TXD / I2C0_SCL / UART5_TXD / BPWM0_CH5 / PWM0_CH0
56	PA.4 / QSPI0_MOSI1 / SPI0_I2SMCLK / UART0_nRTS / UART0_RXD / I2C0_SDA / UART5_RXD / BPWM0_CH4 / PWM0_CH1
57	PA.3 / QSPI0_SS / SPI0_SS / UART4_TXD / I2C0_SMBAL / UART1_TXD / I2C1_SCL / BPWM0_CH3 / PWM0_CH2 / CLKO / PWM1_BRAKE1
58	PA.2 / QSPI0_CLK / SPI0_CLK / UART4_RXD / I2C0_SMBSUS / UART1_RXD / I2C1_SDA / BPWM0_CH2 / PWM0_CH3
59	PA.1 / QSPI0_MISO0 / SPI0_MISO / UART0_TXD / UART1_nCTS / BPWM0_CH1 / PWM0_CH4
60	PA.0 / QSPI0_MOSI0 / SPI0_MOSI / UART0_RXD / UART1_nRTS / BPWM0_CH0 / PWM0_CH5
61	PF.15 / PWM0_BRAKE0 / PWM0_CH1 / TM2 / CLKO / INT4
62	PE.14 / EBI_AD8 / UART2_TXD
63	PE.15 / EBI_AD9 / UART2_RXD
64	nRESET
65	PF.0 / UART1_TXD / I2C1_SCL / UART0_TXD / BPWM1_CH0 / ICE_DAT

Pin	M031KG6AE Pin Function
66	PF.1 / UART1_RXD / I2C1_SDA / UART0_RXD / BPWM1_CH1 / ICE_CLK
67	PD.9 / EBI_AD7 / UART2_nCTS
68	PD.8 / EBI_AD6 / UART2_nRTS
69	PC.5 / EBI_AD5 / QSPI0_MISO1 / UART2_TXD / I2C1_SCL / UART4_TXD / PWM1_CH0
70	PC.4 / EBI_AD4 / QSPI0_MOSI1 / UART2_RXD / I2C1_SDA / UART4_RXD / PWM1_CH1
71	PC.3 / EBI_AD3 / QSPI0_SS / UART2_nRTS / I2C0_SMBAL / UART3_TXD / PWM1_CH2
72	PC.2 / EBI_AD2 / QSPI0_CLK / UART2_nCTS / I2C0_SMBSUS / UART3_RXD / PWM1_CH3
73	PC.1 / EBI_AD1 / QSPI0_MISO0 / UART2_TXD / I2C0_SCL / PWM1_CH4 / ACMP0_O / ADC0_ST
74	PC.0 / EBI_AD0 / QSPI0_MOSI0 / UART2_RXD / I2C0_SDA / PWM1_CH5 / ACMP1_O
75	VSS
76	V_{DD}
77	PG.9 / EBI_AD0 / BPWM0_CH5
78	PG.10 / EBI_AD1 / BPWM0_CH4
79	PG.11 / EBI_AD2 / BPWM0_CH3
80	PG.12 / EBI_AD3 / BPWM0_CH2
81	PG.13 / EBI_AD4 / BPWM0_CH1
82	PG.14 / EBI_AD5 / BPWM0_CH0
83	PG.15 / CLKO / ADC0_ST
84	PD.7 / UART1_TXD / I2C0_SCL / USCI1_CLK
85	PD.6 / UART1_RXD / I2C0_SDA / USCI1_DAT1
86	PD.5 / I2C1_SCL / USCI1_DAT0
87	PD.4 / USCI0_CTL0 / I2C1_SDA / USCI1_CTL1
88	PD.3 / EBI_AD10 / USCI0_CTL1 / SPI0_SS / UART3_nRTS / USCI1_CTL0 / UART0_TXD
89	PD.2 / EBI_AD11 / USCI0_DAT1 / SPI0_CLK / UART3_nCTS / UART0_RXD
90	PD.1 / EBI_AD12 / USCI0_DAT0 / SPI0_MISO / UART3_TXD
91	PD.0 / EBI_AD13 / USCI0_CLK / SPI0_MOSI / UART3_RXD / TM2
92	PD.13 / EBI_AD10 / SPI0_I2SMCLK
93	PA.12 / UART4_TXD / I2C1_SCL / BPWM1_CH2
94	PA.13 / UART4_RXD / I2C1_SDA / BPWM1_CH3
95	PA.14 / UART0_TXD / BPWM1_CH4
96	PA.15 / UART0_RXD / BPWM1_CH5
97	PE.7 / UART5_TXD / PWM0_CH0 / BPWM0_CH5
98	PE.6 / USCI0_CTL0 / UART5_RXD / PWM0_CH1 / BPWM0_CH4

Pin	M031KG6AE Pin Function
99	PE.5 / EBI_nRD / USCI0_CTL1 / PWM0_CH2 / BPWM0_CH3
100	PE.4 / EBI_nWR / USCI0_DAT1 / PWM0_CH3 / BPWM0_CH2
101	PE.3 / EBI_MCLK / USCI0_DAT0 / PWM0_CH4 / BPWM0_CH1
102	PE.2 / EBI_ALE / USCI0_CLK / PWM0_CH5 / BPWM0_CH0
103	VSS
104	V_{DD}
105	PE.1 / EBI_AD10 / QSPI0_MISO0 / UART3_TXD / I2C1_SCL / UART4_nCTS
106	PE.0 / EBI_AD11 / QSPI0_MOSI0 / UART3_RXD / I2C1_SDA / UART4_nRTS
107	PH.8 / EBI_AD12 / QSPI0_CLK / UART3_nRTS / UART1_TXD
108	PH.9 / EBI_AD13 / QSPI0_SS / UART3_nCTS / UART1_RXD
109	PH.10 / EBI_AD14 / QSPI0_MISO1 / UART4_TXD / UART0_TXD
110	PH.11 / EBI_AD15 / QSPI0_MOSI1 / UART4_RXD / UART0_RXD / PWM0_CH5
111	PD.14 / EBI_nCS0 / SPI0_I2SMCLK / USCI0_CTL0 / PWM0_CH4
112	VSS
113	LDO_CAP
114	V_{DD}
115	PC.14 / EBI_AD11 / SPI0_I2SMCLK / USCI0_CTL0 / QSPI0_CLK / TM1
116	PB.15 / ADC0_CH15 / EBI_AD12 / SPI0_SS / USCI0_CTL1 / UART0_nCTS / UART3_TXD / PWM1_CH0 / TM0_EXT / PWM0_BRAKE1
117	PB.14 / ADC0_CH14 / EBI_AD13 / SPI0_CLK / USCI0_DAT1 / UART0_nRTS / UART3_RXD / PWM1_CH1 / TM1_EXT / CLKO
118	PB.13 / ADC0_CH13 / ACMP0_P3 / ACMP1_P3 / EBI_AD14 / SPI0_MISO / USCI0_DAT0 / UART0_TXD / UART3_nRTS / PWM1_CH2 / TM2_EXT
119	PB.12 / ADC0_CH12 / ACMP0_P2 / ACMP1_P2 / EBI_AD15 / SPI0_MOSI / USCI0_CLK / UART0_RXD / UART3_nCTS / PWM1_CH3 / TM3_EXT
120	AV_{DD}
121	V_{REF}
122	AVSS
123	PB.11 / ADC0_CH11 / EBI_ADR16 / UART0_nCTS / UART4_TXD / I2C1_SCL / SPI0_I2SMCLK / BPWM1_CH0
124	PB.10 / ADC0_CH10 / EBI_ADR17 / USCI1_CTL0 / UART0_nRTS / UART4_RXD / I2C1_SDA / BPWM1_CH1
125	PB.9 / ADC0_CH9 / EBI_ADR18 / USCI1_CTL1 / UART0_TXD / UART1_nCTS / BPWM1_CH2
126	PB.8 / ADC0_CH8 / EBI_ADR19 / USCI1_CLK / UART0_RXD / UART1_nRTS / BPWM1_CH3
127	PB.7 / ADC0_CH7 / EBI_nWRL / USCI1_DAT0 / UART1_TXD / EBI_nCS0 / BPWM1_CH4 / PWM1_BRAKE0 / PWM1_CH4 / INT5 / ACMP0_O
128	PB.6 / ADC0_CH6 / EBI_nWRH / USCI1_DAT1 / UART1_RXD / EBI_nCS1 / BPWM1_CH5 / PWM1_BRAKE1 / PWM1_CH5 / INT4 / ACMP1_O

Table 5.1-19 M031KG6AE Multi-function Pin Table

M031KG8AE

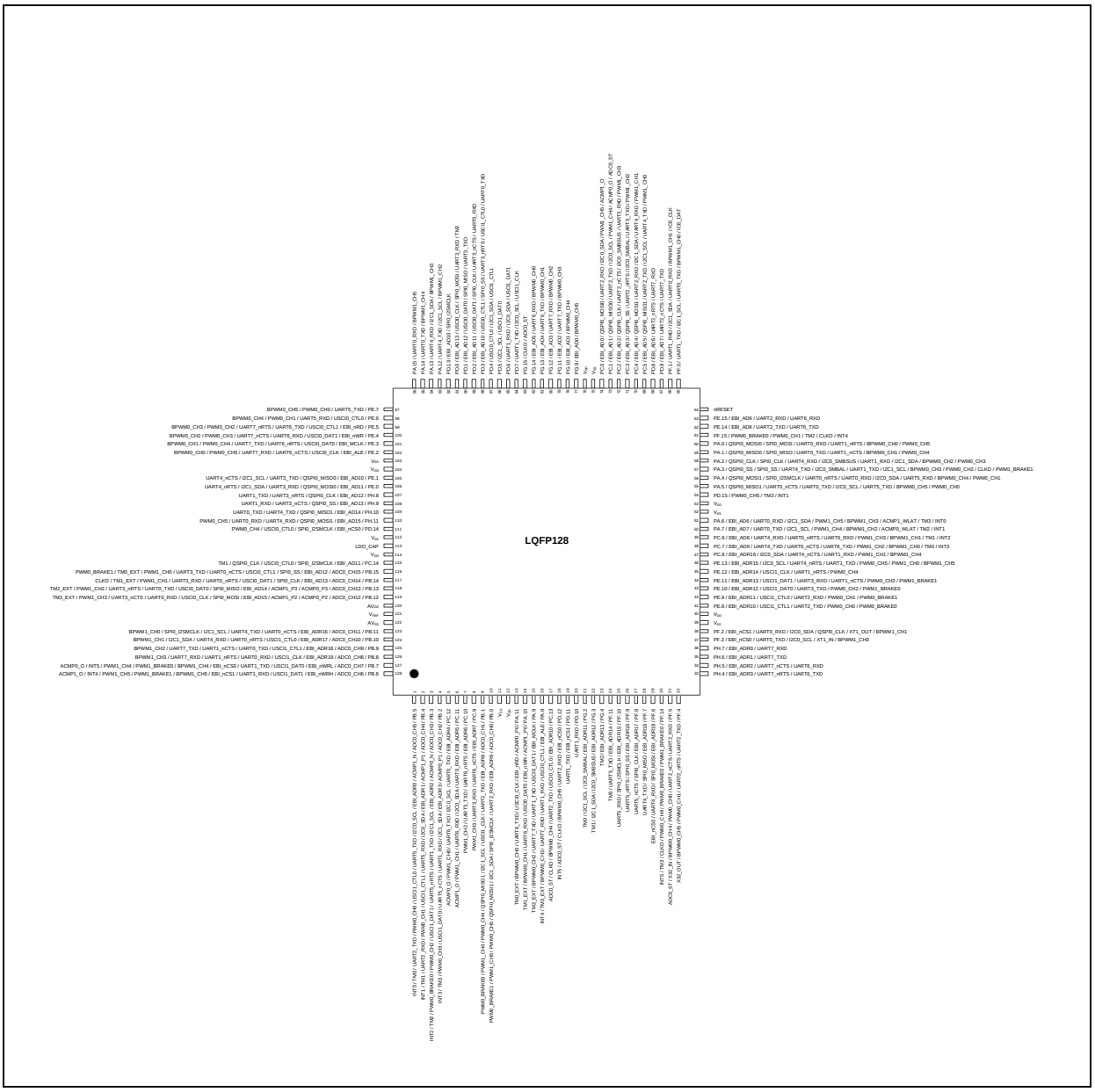

Figure 5.1-26 M031KG8AE Multi-function Pin Diagram

Pin	M031KG8AE Pin Function
1	PB.5 / ADC0_CH5 / ACMP1_N / EBI_ADR0 / I2C0_SCL / UART5_TXD / USCI1_CTL0 / PWM0_CH0 / UART2_TXD / TM0 / INT0
2	PB.4 / ADC0_CH4 / ACMP1_P1 / EBI_ADR1 / I2C0_SDA / UART5_RXD / USCI1_CTL1 / PWM0_CH1 / UART2_RXD / TM1 / INT1

Pin	M031KG8AE Pin Function
3	PB.3 / ADC0_CH3 / ACMP0_N / EBI_ADR2 / I2C1_SCL / UART1_TXD / UART5_nRTS / USCI1_DAT1 / PWM0_CH2 / PWM0_BRAKE0 / TM2 / INT2
4	PB.2 / ADC0_CH2 / ACMP0_P1 / EBI_ADR3 / I2C1_SDA / UART1_RXD / UART5_nCTS / USCI1_DAT0 / PWM0_CH3 / TM3 / INT3
5	PC.12 / EBI_ADR4 / UART0_TXD / I2C0_SCL / PWM1_CH0 / ACMP0_O
6	PC.11 / EBI_ADR5 / UART0_RXD / I2C0_SDA / PWM1_CH1 / ACMP1_O
7	PC.10 / EBI_ADR6 / UART3_TXD / PWM1_CH2
8	PC.9 / EBI_ADR7 / UART3_RXD / PWM1_CH3
9	PB.1 / ADC0_CH1 / EBI_ADR8 / UART2_TXD / USCI1_CLK / I2C1_SCL / QSPI0_MISO1 / PWM0_CH4 / PWM1_CH4 / PWM0_BRAKE0
10	PB.0 / ADC0_CH0 / EBI_ADR9 / UART2_RXD / SPI0_I2SMCLK / I2C1_SDA / QSPI0_MOSI1 / PWM0_CH5 / PWM1_CH5 / PWM0_BRAKE1
11	VSS
12	V_{DD}
13	PA.11 / ACMP0_P0 / EBI_nRD / USCI0_CLK / BPWM0_CH0 / TM0_EXT
14	PA.10 / ACMP1_P0 / EBI_nWR / USCI0_DAT0 / BPWM0_CH1 / TM1_EXT
15	PA.9 / EBI_MCLK / USCI0_DAT1 / UART1_TXD / BPWM0_CH2 / TM2_EXT
16	PA.8 / EBI_ALE / USCI0_CTL1 / UART1_RXD / BPWM0_CH3 / TM3_EXT / INT4
17	PC.13 / EBI_ADR10 / USCI0_CTL0 / UART2_TXD / BPWM0_CH4 / CLKO / ADC0_ST
18	PD.12 / EBI_nCS0 / UART2_RXD / BPWM0_CH5 / CLKO / ADC0_ST / INT5
19	PD.11 / EBI_nCS1 / UART1_TXD
20	PD.10 / UART1_RXD
21	PG.2 / EBI_ADR11 / I2C0_SMBAL / I2C1_SCL / TM0
22	PG.3 / EBI_ADR12 / I2C0_SMBSUS / I2C1_SDA / TM1
23	PG.4 / EBI_ADR13 / TM2
24	PF.11 / EBI_ADR14 / UART5_TXD / TM3
25	PF.10 / EBI_ADR15 / SPI0_I2SMCLK / UART5_RXD
26	PF.9 / EBI_ADR16 / SPI0_SS / UART5_nRTS
27	PF.8 / EBI_ADR17 / SPI0_CLK / UART5_nCTS
28	PF.7 / EBI_ADR18 / SPI0_MISO / UART4_TXD
29	PF.6 / EBI_ADR19 / SPI0_MOSI / UART4_RXD / EBI_nCS0
30	PF.14 / PWM1_BRAKE0 / PWM0_BRAKE0 / PWM0_CH4 / CLKO / TM3 / INT5
31	PF.5 / UART2_RXD / UART2_nCTS / PWM0_CH0 / BPWM0_CH4 / X32_IN / ADC0_ST
32	PF.4 / UART2_TXD / UART2_nRTS / PWM0_CH1 / BPWM0_CH5 / X32_OUT
33	PH.4 / EBI_ADR3

Pin	M031KG8AE Pin Function
34	PH.5 / EBI_ADR2
35	PH.6 / EBI_ADR1
36	PH.7 / EBI_ADR0
37	PF.3 / EBI_nCS0 / UART0_TXD / I2C0_SCL / XT1_IN / BPWM1_CH0
38	PF.2 / EBI_nCS1 / UART0_RXD / I2C0_SDA / QSPI0_CLK / XT1_OUT / BPWM1_CH1
39	VSS
40	V_{DD}
41	PE.8 / EBI_ADR10 / USCI1_CTL1 / UART2_TXD / PWM0_CH0 / PWM0_BRAKE0
42	PE.9 / EBI_ADR11 / USCI1_CTL0 / UART2_RXD / PWM0_CH1 / PWM0_BRAKE1
43	PE.10 / EBI_ADR12 / USCI1_DAT0 / UART3_TXD / PWM0_CH2 / PWM1_BRAKE0
44	PE.11 / EBI_ADR13 / USCI1_DAT1 / UART3_RXD / UART1_nCTS / PWM0_CH3 / PWM1_BRAKE1
45	PE.12 / EBI_ADR14 / USCI1_CLK / UART1_nRTS / PWM0_CH4
46	PE.13 / EBI_ADR15 / I2C0_SCL / UART4_nRTS / UART1_TXD / PWM0_CH5 / PWM1_CH0 / BPWM1_CH5
47	PC.8 / EBI_ADR16 / I2C0_SDA / UART4_nCTS / UART1_RXD / PWM1_CH1 / BPWM1_CH4
48	PC.7 / EBI_AD9 / UART4_TXD / UART0_nCTS / PWM1_CH2 / BPWM1_CH0 / TM0 / INT3
49	PC.6 / EBI_AD8 / UART4_RXD / UART0_nRTS / PWM1_CH3 / BPWM1_CH1 / TM1 / INT2
50	PA.7 / EBI_AD7 / UART0_TXD / I2C1_SCL / PWM1_CH4 / BPWM1_CH2 / ACMP0_WLAT / TM2 / INT1
51	PA.6 / EBI_AD6 / UART0_RXD / I2C1_SDA / PWM1_CH5 / BPWM1_CH3 / ACMP1_WLAT / TM3 / INT0
52	VSS
53	V_{DD}
54	PD.15 / PWM0_CH5 / TM3 / INT1
55	PA.5 / QSPI0_MISO1 / UART0_nCTS / UART0_TXD / I2C0_SCL / UART5_TXD / BPWM0_CH5 / PWM0_CH0
56	PA.4 / QSPI0_MOSI1 / SPI0_I2SMCLK / UART0_nRTS / UART0_RXD / I2C0_SDA / UART5_RXD / BPWM0_CH4 / PWM0_CH1
57	PA.3 / QSPI0_SS / SPI0_SS / UART4_TXD / I2C0_SMBAL / UART1_TXD / I2C1_SCL / BPWM0_CH3 / PWM0_CH2 / CLKO / PWM1_BRAKE1
58	PA.2 / QSPI0_CLK / SPI0_CLK / UART4_RXD / I2C0_SMBSUS / UART1_RXD / I2C1_SDA / BPWM0_CH2 / PWM0_CH3
59	PA.1 / QSPI0_MISO0 / SPI0_MISO / UART0_TXD / UART1_nCTS / BPWM0_CH1 / PWM0_CH4
60	PA.0 / QSPI0_MOSI0 / SPI0_MOSI / UART0_RXD / UART1_nRTS / BPWM0_CH0 / PWM0_CH5
61	PF.15 / PWM0_BRAKE0 / PWM0_CH1 / TM2 / CLKO / INT4
62	PE.14 / EBI_AD8 / UART2_TXD
63	PE.15 / EBI_AD9 / UART2_RXD
64	nRESET
65	PF.0 / UART1_TXD / I2C1_SCL / UART0_TXD / BPWM1_CH0 / ICE_DAT

Pin	M031KG8AE Pin Function
66	PF.1 / UART1_RXD / I2C1_SDA / UART0_RXD / BPWM1_CH1 / ICE_CLK
67	PD.9 / EBI_AD7 / UART2_nCTS
68	PD.8 / EBI_AD6 / UART2_nRTS
69	PC.5 / EBI_AD5 / QSPI0_MISO1 / UART2_TXD / I2C1_SCL / UART4_TXD / PWM1_CH0
70	PC.4 / EBI_AD4 / QSPI0_MOSI1 / UART2_RXD / I2C1_SDA / UART4_RXD / PWM1_CH1
71	PC.3 / EBI_AD3 / QSPI0_SS / UART2_nRTS / I2C0_SMBAL / UART3_TXD / PWM1_CH2
72	PC.2 / EBI_AD2 / QSPI0_CLK / UART2_nCTS / I2C0_SMBSUS / UART3_RXD / PWM1_CH3
73	PC.1 / EBI_AD1 / QSPI0_MISO0 / UART2_TXD / I2C0_SCL / PWM1_CH4 / ACMP0_O / ADC0_ST
74	PC.0 / EBI_AD0 / QSPI0_MOSI0 / UART2_RXD / I2C0_SDA / PWM1_CH5 / ACMP1_O
75	VSS
76	V_{DD}
77	PG.9 / EBI_AD0 / BPWM0_CH5
78	PG.10 / EBI_AD1 / BPWM0_CH4
79	PG.11 / EBI_AD2 / BPWM0_CH3
80	PG.12 / EBI_AD3 / BPWM0_CH2
81	PG.13 / EBI_AD4 / BPWM0_CH1
82	PG.14 / EBI_AD5 / BPWM0_CH0
83	PG.15 / CLKO / ADC0_ST
84	PD.7 / UART1_TXD / I2C0_SCL / USCI1_CLK
85	PD.6 / UART1_RXD / I2C0_SDA / USCI1_DAT1
86	PD.5 / I2C1_SCL / USCI1_DAT0
87	PD.4 / USCI0_CTL0 / I2C1_SDA / USCI1_CTL1
88	PD.3 / EBI_AD10 / USCI0_CTL1 / SPI0_SS / UART3_nRTS / USCI1_CTL0 / UART0_TXD
89	PD.2 / EBI_AD11 / USCI0_DAT1 / SPI0_CLK / UART3_nCTS / UART0_RXD
90	PD.1 / EBI_AD12 / USCI0_DAT0 / SPI0_MISO / UART3_TXD
91	PD.0 / EBI_AD13 / USCI0_CLK / SPI0_MOSI / UART3_RXD / TM2
92	PD.13 / EBI_AD10 / SPI0_I2SMCLK
93	PA.12 / UART4_TXD / I2C1_SCL / BPWM1_CH2
94	PA.13 / UART4_RXD / I2C1_SDA / BPWM1_CH3
95	PA.14 / UART0_TXD / BPWM1_CH4
96	PA.15 / UART0_RXD / BPWM1_CH5
97	PE.7 / UART5_TXD / PWM0_CH0 / BPWM0_CH5
98	PE.6 / USCI0_CTL0 / UART5_RXD / PWM0_CH1 / BPWM0_CH4

Pin	M031KG8AE Pin Function
99	PE.5 / EBI_nRD / USCI0_CTL1 / PWM0_CH2 / BPWM0_CH3
100	PE.4 / EBI_nWR / USCI0_DAT1 / PWM0_CH3 / BPWM0_CH2
101	PE.3 / EBI_MCLK / USCI0_DAT0 / PWM0_CH4 / BPWM0_CH1
102	PE.2 / EBI_ALE / USCI0_CLK / PWM0_CH5 / BPWM0_CH0
103	VSS
104	V_{DD}
105	PE.1 / EBI_AD10 / QSPI0_MISO0 / UART3_TXD / I2C1_SCL / UART4_nCTS
106	PE.0 / EBI_AD11 / QSPI0_MOSI0 / UART3_RXD / I2C1_SDA / UART4_nRTS
107	PH.8 / EBI_AD12 / QSPI0_CLK / UART3_nRTS / UART1_TXD
108	PH.9 / EBI_AD13 / QSPI0_SS / UART3_nCTS / UART1_RXD
109	PH.10 / EBI_AD14 / QSPI0_MISO1 / UART4_TXD / UART0_TXD
110	PH.11 / EBI_AD15 / QSPI0_MOSI1 / UART4_RXD / UART0_RXD / PWM0_CH5
111	PD.14 / EBI_nCS0 / SPI0_I2SMCLK / USCI0_CTL0 / PWM0_CH4
112	VSS
113	LDO_CAP
114	V_{DD}
115	PC.14 / EBI_AD11 / SPI0_I2SMCLK / USCI0_CTL0 / QSPI0_CLK / TM1
116	PB.15 / ADC0_CH15 / EBI_AD12 / SPI0_SS / USCI0_CTL1 / UART0_nCTS / UART3_TXD / PWM1_CH0 / TM0_EXT / PWM0_BRAKE1
117	PB.14 / ADC0_CH14 / EBI_AD13 / SPI0_CLK / USCI0_DAT1 / UART0_nRTS / UART3_RXD / PWM1_CH1 / TM1_EXT / CLKO
118	PB.13 / ADC0_CH13 / ACMP0_P3 / ACMP1_P3 / EBI_AD14 / SPI0_MISO / USCI0_DAT0 / UART0_TXD / UART3_nRTS / PWM1_CH2 / TM2_EXT
119	PB.12 / ADC0_CH12 / ACMP0_P2 / ACMP1_P2 / EBI_AD15 / SPI0_MOSI / USCI0_CLK / UART0_RXD / UART3_nCTS / PWM1_CH3 / TM3_EXT
120	AV_{DD}
121	V_{REF}
122	AVSS
123	PB.11 / ADC0_CH11 / EBI_ADR16 / UART0_nCTS / UART4_TXD / I2C1_SCL / SPI0_I2SMCLK / BPWM1_CH0
124	PB.10 / ADC0_CH10 / EBI_ADR17 / USCI1_CTL0 / UART0_nRTS / UART4_RXD / I2C1_SDA / BPWM1_CH1
125	PB.9 / ADC0_CH9 / EBI_ADR18 / USCI1_CTL1 / UART0_TXD / UART1_nCTS / BPWM1_CH2
126	PB.8 / ADC0_CH8 / EBI_ADR19 / USCI1_CLK / UART0_RXD / UART1_nRTS / BPWM1_CH3
127	PB.7 / ADC0_CH7 / EBI_nWRL / USCI1_DAT0 / UART1_TXD / EBI_nCS0 / BPWM1_CH4 / PWM1_BRAKE0 / PWM1_CH4 / INT5 / ACMP0_O
128	PB.6 / ADC0_CH6 / EBI_nWRH / USCI1_DAT1 / UART1_RXD / EBI_nCS1 / BPWM1_CH5 / PWM1_BRAKE1 / PWM1_CH5 / INT4 / ACMP1_O

Table 5.1-20 M031KG8AE Multi-function Pin Table

M031KIAAE

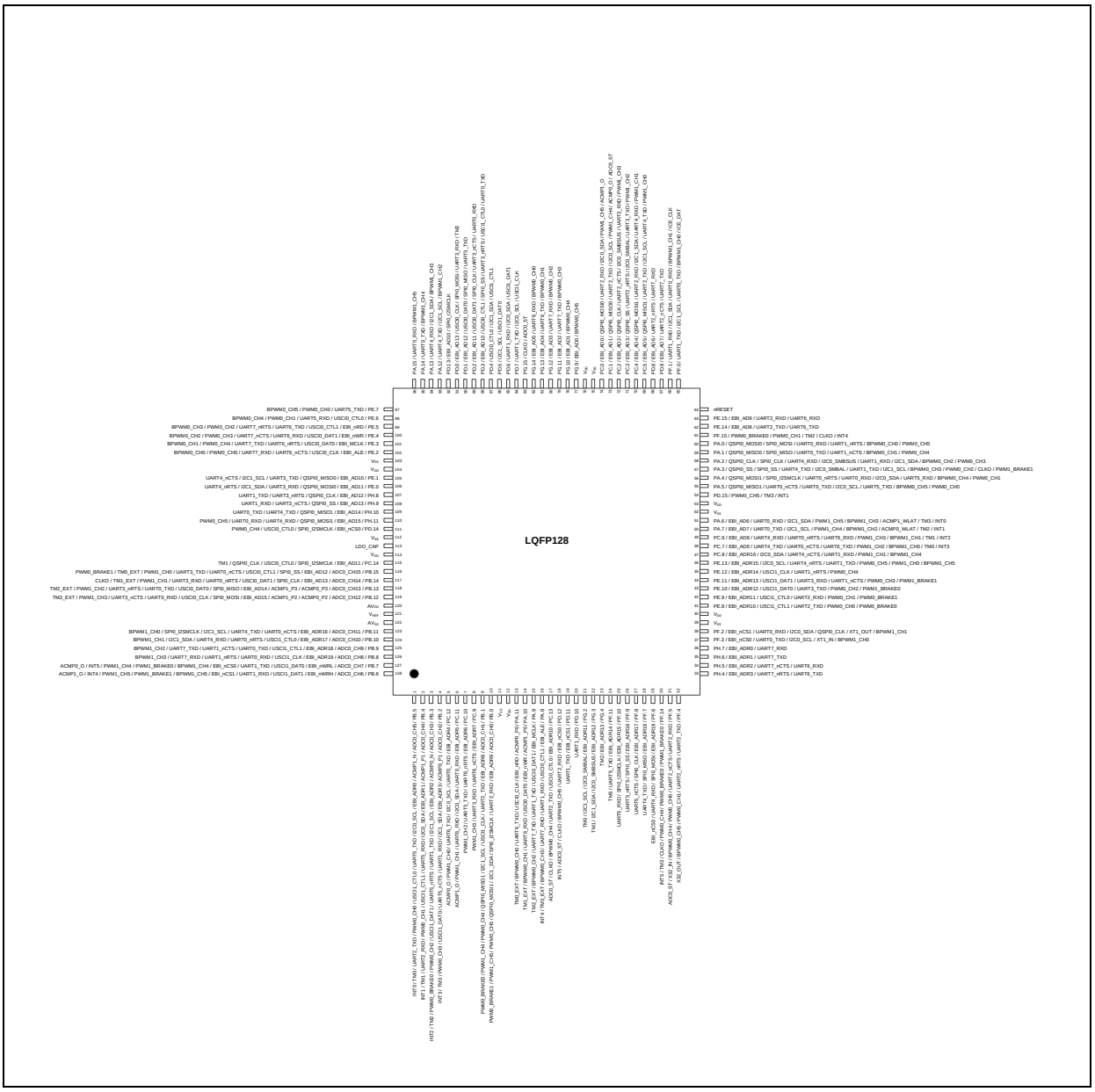

Figure 5.1-27 M031KIAAE Multi-function Pin Diagram

Pin	M031KIAAE Pin Function
1	PB.5 / ADC0_CH5 / ACMP1_N / EBI_ADR0 / I2C0_SCL / UART5_TXD / USCI1_CTL0 / PWM0_CH0 / UART2_TXD / TM0 / INT0
2	PB.4 / ADC0_CH4 / ACMP1_P1 / EBI_ADR1 / I2C0_SDA / UART5_RXD / USCI1_CTL1 / PWM0_CH1 / UART2_RXD / TM1 / INT1

Pin	M031KIAAE Pin Function
3	PB.3 / ADC0_CH3 / ACMP0_N / EBI_ADR2 / I2C1_SCL / UART1_TXD / UART5_nRTS / USCI1_DAT1 / PWM0_CH2 / PWM0_BRAKE0 / TM2 / INT2
4	PB.2 / ADC0_CH2 / ACMP0_P1 / EBI_ADR3 / I2C1_SDA / UART1_RXD / UART5_nCTS / USCI1_DAT0 / PWM0_CH3 / TM3 / INT3
5	PC.12 / EBI_ADR4 / UART0_TXD / I2C0_SCL / UART6_TXD / PWM1_CH0 / ACMP0_O
6	PC.11 / EBI_ADR5 / UART0_RXD / I2C0_SDA / UART6_RXD / PWM1_CH1 / ACMP1_O
7	PC.10 / EBI_ADR6 / UART6_nRTS / UART3_TXD / PWM1_CH2
8	PC.9 / EBI_ADR7 / UART6_nCTS / UART3_RXD / PWM1_CH3
9	PB.1 / ADC0_CH1 / EBI_ADR8 / UART2_TXD / USCI1_CLK / I2C1_SCL / QSPI0_MISO1 / PWM0_CH4 / PWM1_CH4 / PWM0_BRAKE0
10	PB.0 / ADC0_CH0 / EBI_ADR9 / UART2_RXD / SPI0_I2SMCLK / I2C1_SDA / QSPI0_MOSI1 / PWM0_CH5 / PWM1_CH5 / PWM0_BRAKE1
11	VSS
12	V_{DD}
13	PA.11 / ACMP0_P0 / EBI_nRD / USCI0_CLK / UART6_TXD / BPWM0_CH0 / TM0_EXT
14	PA.10 / ACMP1_P0 / EBI_nWR / USCI0_DAT0 / UART6_RXD / BPWM0_CH1 / TM1_EXT
15	PA.9 / EBI_MCLK / USCI0_DAT1 / UART1_TXD / UART7_TXD / BPWM0_CH2 / TM2_EXT
16	PA.8 / EBI_ALE / USCI0_CTL1 / UART1_RXD / UART7_RXD / BPWM0_CH3 / TM3_EXT / INT4
17	PC.13 / EBI_ADR10 / USCI0_CTL0 / UART2_TXD / BPWM0_CH4 / CLKO / ADC0_ST
18	PD.12 / EBI_nCS0 / UART2_RXD / BPWM0_CH5 / CLKO / ADC0_ST / INT5
19	PD.11 / EBI_nCS1 / UART1_TXD
20	PD.10 / UART1_RXD
21	PG.2 / EBI_ADR11 / I2C0_SMBAL / I2C1_SCL / TM0
22	PG.3 / EBI_ADR12 / I2C0_SMBSUS / I2C1_SDA / TM1
23	PG.4 / EBI_ADR13 / TM2
24	PF.11 / EBI_ADR14 / UART5_TXD / TM3
25	PF.10 / EBI_ADR15 / SPI0_I2SMCLK / UART5_RXD
26	PF.9 / EBI_ADR16 / SPI0_SS / UART5_nRTS
27	PF.8 / EBI_ADR17 / SPI0_CLK / UART5_nCTS
28	PF.7 / EBI_ADR18 / SPI0_MISO / UART4_TXD
29	PF.6 / EBI_ADR19 / SPI0_MOSI / UART4_RXD / EBI_nCS0
30	PF.14 / PWM1_BRAKE0 / PWM0_BRAKE0 / PWM0_CH4 / CLKO / TM3 / INT5
31	PF.5 / UART2_RXD / UART2_nCTS / PWM0_CH0 / BPWM0_CH4 / X32_IN / ADC0_ST
32	PF.4 / UART2_TXD / UART2_nRTS / PWM0_CH1 / BPWM0_CH5 / X32_OUT
33	PH.4 / EBI_ADR3 / UART7_nRTS / UART6_TXD

Pin	M031KIAAE Pin Function
34	PH.5 / EBI_ADR2 / UART7_nCTS / UART6_RXD
35	PH.6 / EBI_ADR1 / UART7_TXD
36	PH.7 / EBI_ADR0 / UART7_RXD
37	PF.3 / EBI_nCS0 / UART0_TXD / I2C0_SCL / XT1_IN / BPWM1_CH0
38	PF.2 / EBI_nCS1 / UART0_RXD / I2C0_SDA / QSPI0_CLK / XT1_OUT / BPWM1_CH1
39	VSS
40	V_{DD}
41	PE.8 / EBI_ADR10 / USCI1_CTL1 / UART2_TXD / PWM0_CH0 / PWM0_BRAKE0
42	PE.9 / EBI_ADR11 / USCI1_CTL0 / UART2_RXD / PWM0_CH1 / PWM0_BRAKE1
43	PE.10 / EBI_ADR12 / USCI1_DAT0 / UART3_TXD / PWM0_CH2 / PWM1_BRAKE0
44	PE.11 / EBI_ADR13 / USCI1_DAT1 / UART3_RXD / UART1_nCTS / PWM0_CH3 / PWM1_BRAKE1
45	PE.12 / EBI_ADR14 / USCI1_CLK / UART1_nRTS / PWM0_CH4
46	PE.13 / EBI_ADR15 / I2C0_SCL / UART4_nRTS / UART1_TXD / PWM0_CH5 / PWM1_CH0 / BPWM1_CH5
47	PC.8 / EBI_ADR16 / I2C0_SDA / UART4_nCTS / UART1_RXD / PWM1_CH1 / BPWM1_CH4
48	PC.7 / EBI_AD9 / UART4_TXD / UART0_nCTS / UART6_TXD / PWM1_CH2 / BPWM1_CH0 / TM0 / INT3
49	PC.6 / EBI_AD8 / UART4_RXD / UART0_nRTS / UART6_RXD / PWM1_CH3 / BPWM1_CH1 / TM1 / INT2
50	PA.7 / EBI_AD7 / UART0_TXD / I2C1_SCL / PWM1_CH4 / BPWM1_CH2 / ACMP0_WLAT / TM2 / INT1
51	PA.6 / EBI_AD6 / UART0_RXD / I2C1_SDA / PWM1_CH5 / BPWM1_CH3 / ACMP1_WLAT / TM3 / INT0
52	VSS
53	V_{DD}
54	PD.15 / PWM0_CH5 / TM3 / INT1
55	PA.5 / QSPI0_MISO1 / UART0_nCTS / UART0_TXD / I2C0_SCL / UART5_TXD / BPWM0_CH5 / PWM0_CH0
56	PA.4 / QSPI0_MOSI1 / SPI0_I2SMCLK / UART0_nRTS / UART0_RXD / I2C0_SDA / UART5_RXD / BPWM0_CH4 / PWM0_CH1
57	PA.3 / QSPI0_SS / SPI0_SS / UART4_TXD / I2C0_SMBAL / UART1_TXD / I2C1_SCL / BPWM0_CH3 / PWM0_CH2 / CLKO / PWM1_BRAKE1
58	PA.2 / QSPI0_CLK / SPI0_CLK / UART4_RXD / I2C0_SMBSUS / UART1_RXD / I2C1_SDA / BPWM0_CH2 / PWM0_CH3
59	PA.1 / QSPI0_MISO0 / SPI0_MISO / UART0_TXD / UART1_nCTS / BPWM0_CH1 / PWM0_CH4
60	PA.0 / QSPI0_MOSI0 / SPI0_MOSI / UART0_RXD / UART1_nRTS / BPWM0_CH0 / PWM0_CH5
61	PF.15 / PWM0_BRAKE0 / PWM0_CH1 / TM2 / CLKO / INT4
62	PE.14 / EBI_AD8 / UART2_TXD / UART6_TXD
63	PE.15 / EBI_AD9 / UART2_RXD / UART6_RXD
64	nRESET
65	PF.0 / UART1_TXD / I2C1_SCL / UART0_TXD / BPWM1_CH0 / ICE_DAT

Pin	M031KIAAE Pin Function
66	PF.1 / UART1_RXD / I2C1_SDA / UART0_RXD / BPWM1_CH1 / ICE_CLK
67	PD.9 / EBI_AD7 / UART2_nCTS / UART7_TXD
68	PD.8 / EBI_AD6 / UART2_nRTS / UART7_RXD
69	PC.5 / EBI_AD5 / QSPI0_MISO1 / UART2_TXD / I2C1_SCL / UART4_TXD / PWM1_CH0
70	PC.4 / EBI_AD4 / QSPI0_MOSI1 / UART2_RXD / I2C1_SDA / UART4_RXD / PWM1_CH1
71	PC.3 / EBI_AD3 / QSPI0_SS / UART2_nRTS / I2C0_SMBAL / UART3_TXD / PWM1_CH2
72	PC.2 / EBI_AD2 / QSPI0_CLK / UART2_nCTS / I2C0_SMBSUS / UART3_RXD / PWM1_CH3
73	PC.1 / EBI_AD1 / QSPI0_MISO0 / UART2_TXD / I2C0_SCL / PWM1_CH4 / ACMP0_O / ADC0_ST
74	PC.0 / EBI_AD0 / QSPI0_MOSI0 / UART2_RXD / I2C0_SDA / PWM1_CH5 / ACMP1_O
75	VSS
76	V_{DD}
77	PG.9 / EBI_AD0 / BPWM0_CH5
78	PG.10 / EBI_AD1 / BPWM0_CH4
79	PG.11 / EBI_AD2 / UART7_TXD / BPWM0_CH3
80	PG.12 / EBI_AD3 / UART7_RXD / BPWM0_CH2
81	PG.13 / EBI_AD4 / UART6_TXD / BPWM0_CH1
82	PG.14 / EBI_AD5 / UART6_RXD / BPWM0_CH0
83	PG.15 / CLKO / ADC0_ST
84	PD.7 / UART1_TXD / I2C0_SCL / USCI1_CLK
85	PD.6 / UART1_RXD / I2C0_SDA / USCI1_DAT1
86	PD.5 / I2C1_SCL / USCI1_DAT0
87	PD.4 / USCI0_CTL0 / I2C1_SDA / USCI1_CTL1
88	PD.3 / EBI_AD10 / USCI0_CTL1 / SPI0_SS / UART3_nRTS / USCI1_CTL0 / UART0_TXD
89	PD.2 / EBI_AD11 / USCI0_DAT1 / SPI0_CLK / UART3_nCTS / UART0_RXD
90	PD.1 / EBI_AD12 / USCI0_DAT0 / SPI0_MISO / UART3_TXD
91	PD.0 / EBI_AD13 / USCI0_CLK / SPI0_MOSI / UART3_RXD / TM2
92	PD.13 / EBI_AD10 / SPI0_I2SMCLK
93	PA.12 / UART4_TXD / I2C1_SCL / BPWM1_CH2
94	PA.13 / UART4_RXD / I2C1_SDA / BPWM1_CH3
95	PA.14 / UART0_TXD / BPWM1_CH4
96	PA.15 / UART0_RXD / BPWM1_CH5
97	PE.7 / UART5_TXD / PWM0_CH0 / BPWM0_CH5
98	PE.6 / USCI0_CTL0 / UART5_RXD / PWM0_CH1 / BPWM0_CH4

Pin	M031KIAAE Pin Function
99	PE.5 / EBI_nRD / USCI0_CTL1 / UART6_TXD / UART7_nRTS / PWM0_CH2 / BPWM0_CH3
100	PE.4 / EBI_nWR / USCI0_DAT1 / UART6_RXD / UART7_nCTS / PWM0_CH3 / BPWM0_CH2
101	PE.3 / EBI_MCLK / USCI0_DAT0 / UART6_nRTS / UART7_TXD / PWM0_CH4 / BPWM0_CH1
102	PE.2 / EBI_ALE / USCI0_CLK / UART6_nCTS / UART7_RXD / PWM0_CH5 / BPWM0_CH0
103	VSS
104	V_{DD}
105	PE.1 / EBI_AD10 / QSPI0_MISO0 / UART3_TXD / I2C1_SCL / UART4_nCTS
106	PE.0 / EBI_AD11 / QSPI0_MOSI0 / UART3_RXD / I2C1_SDA / UART4_nRTS
107	PH.8 / EBI_AD12 / QSPI0_CLK / UART3_nRTS / UART1_TXD
108	PH.9 / EBI_AD13 / QSPI0_SS / UART3_nCTS / UART1_RXD
109	PH.10 / EBI_AD14 / QSPI0_MISO1 / UART4_TXD / UART0_TXD
110	PH.11 / EBI_AD15 / QSPI0_MOSI1 / UART4_RXD / UART0_RXD / PWM0_CH5
111	PD.14 / EBI_nCS0 / SPI0_I2SMCLK / USCI0_CTL0 / PWM0_CH4
112	VSS
113	LDO_CAP
114	V_{DD}
115	PC.14 / EBI_AD11 / SPI0_I2SMCLK / USCI0_CTL0 / QSPI0_CLK / TM1
116	PB.15 / ADC0_CH15 / EBI_AD12 / SPI0_SS / USCI0_CTL1 / UART0_nCTS / UART3_TXD / PWM1_CH0 / TM0_EXT / PWM0_BRAKE1
117	PB.14 / ADC0_CH14 / EBI_AD13 / SPI0_CLK / USCI0_DAT1 / UART0_nRTS / UART3_RXD / PWM1_CH1 / TM1_EXT / CLKO
118	PB.13 / ADC0_CH13 / ACMP0_P3 / ACMP1_P3 / EBI_AD14 / SPI0_MISO / USCI0_DAT0 / UART0_TXD / UART3_nRTS / PWM1_CH2 / TM2_EXT
119	PB.12 / ADC0_CH12 / ACMP0_P2 / ACMP1_P2 / EBI_AD15 / SPI0_MOSI / USCI0_CLK / UART0_RXD / UART3_nCTS / PWM1_CH3 / TM3_EXT
120	AV_{DD}
121	V_{REF}
122	AVSS
123	PB.11 / ADC0_CH11 / EBI_ADR16 / UART0_nCTS / UART4_TXD / I2C1_SCL / SPI0_I2SMCLK / BPWM1_CH0
124	PB.10 / ADC0_CH10 / EBI_ADR17 / USCI1_CTL0 / UART0_nRTS / UART4_RXD / I2C1_SDA / BPWM1_CH1
125	PB.9 / ADC0_CH9 / EBI_ADR18 / USCI1_CTL1 / UART0_TXD / UART1_nCTS / UART7_TXD / BPWM1_CH2
126	PB.8 / ADC0_CH8 / EBI_ADR19 / USCI1_CLK / UART0_RXD / UART1_nRTS / UART7_RXD / BPWM1_CH3
127	PB.7 / ADC0_CH7 / EBI_nWRL / USCI1_DAT0 / UART1_TXD / EBI_nCS0 / BPWM1_CH4 / PWM1_BRAKE0 / PWM1_CH4 / INT5 / ACMP0_O
128	PB.6 / ADC0_CH6 / EBI_nWRH / USCI1_DAT1 / UART1_RXD / EBI_nCS1 / BPWM1_CH5 / PWM1_BRAKE1 / PWM1_CH5 / INT4 / ACMP1_O

Table 5.1-21 M031KIAAE Multi-function Pin Table

5.1.3 M032 Series Pin Diagram

5.1.3.1 M032 Series TSSOP 20-Pin Diagram

Corresponding Part Number: M032FC1AE

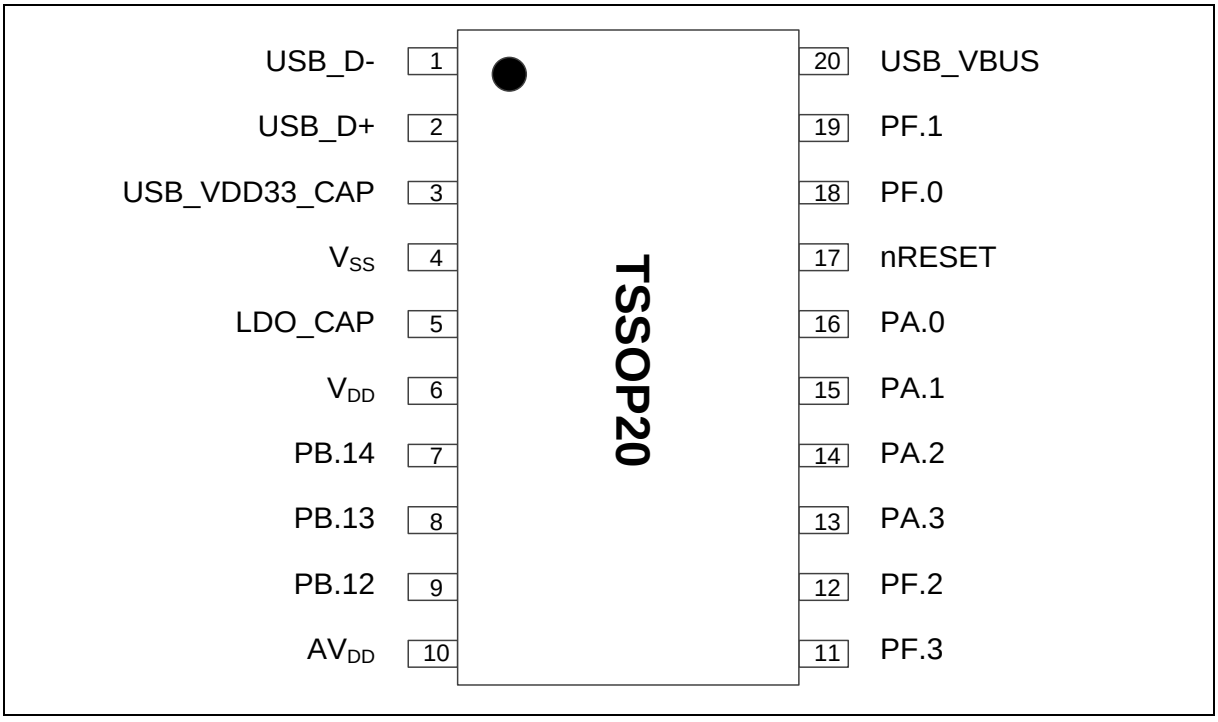

Figure 5.1-28 M032 Series TSSOP 20-pin Diagram

5.1.3.2 M032 Series TSSOP 28-Pin Diagram

Corresponding Part Number: M032EC1AE

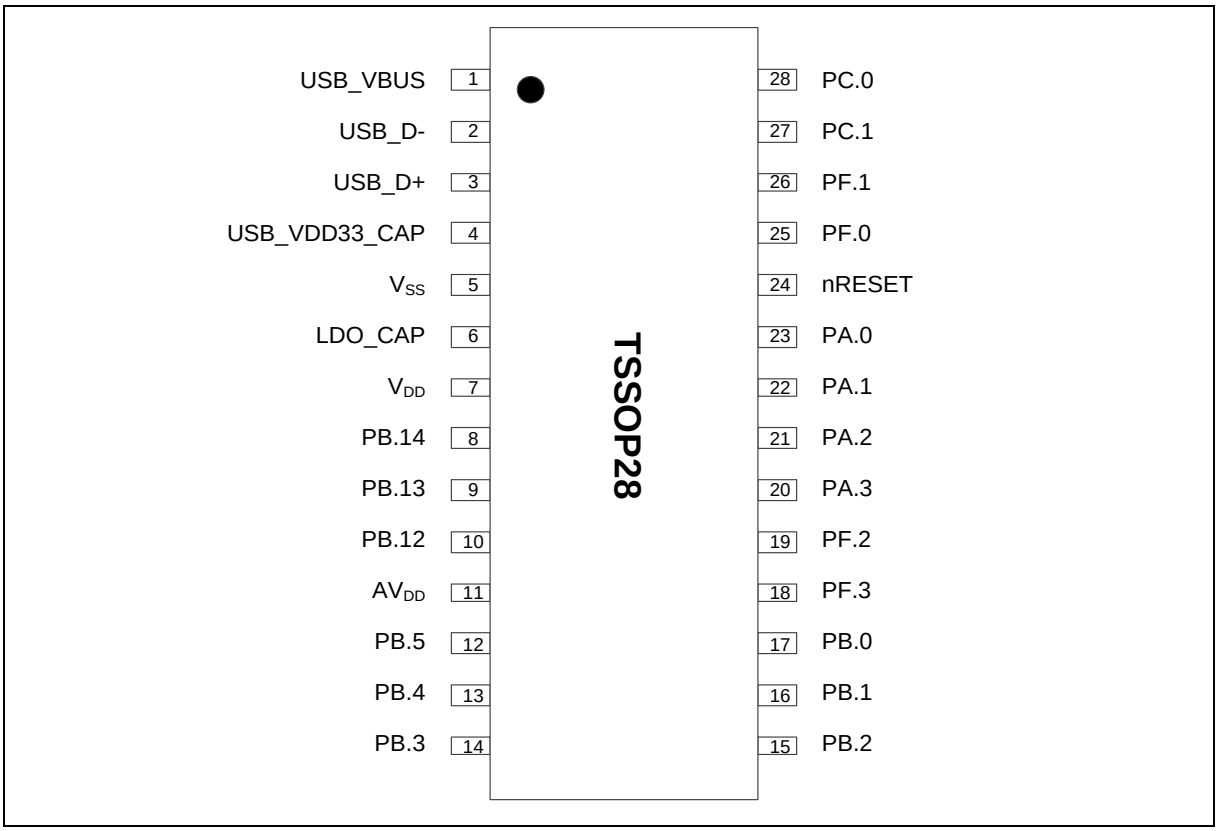

Figure 5.1-29 M032 Series TSSOP 28-pin Diagram

5.1.3.3 M032 Series QFN 33-Pin Diagram

Corresponding Part Number: M032TC1AE, M032TD2AE

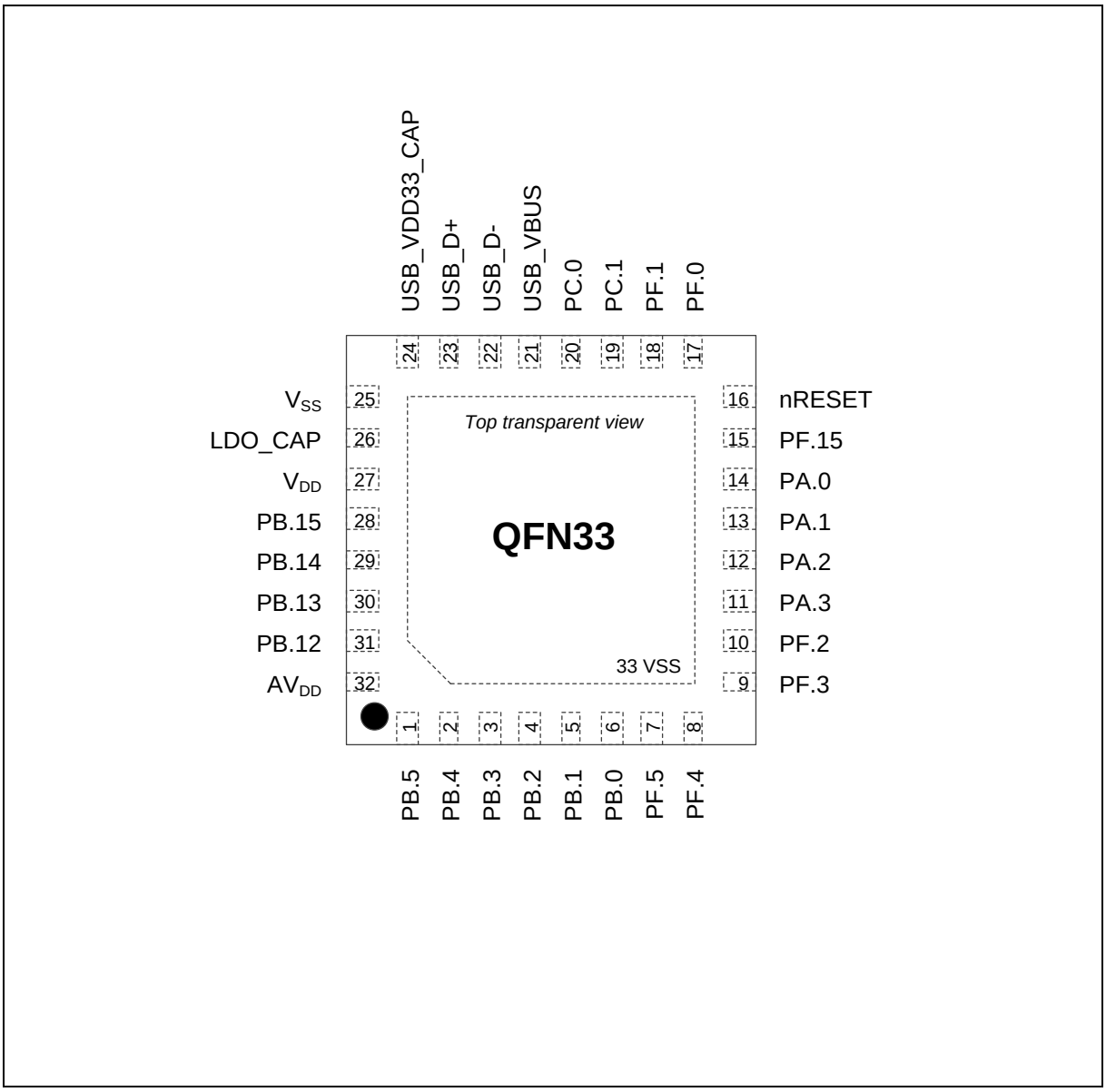

Figure 5.1-30 M032 Series QFN 33-pin Diagram

5.1.3.4 M032 Series LQFP 48-Pin Diagram

Corresponding Part Number: M032LC2AE, M032LD2AE ,M032LE3AE, M032LG6AE, M032LG8AE

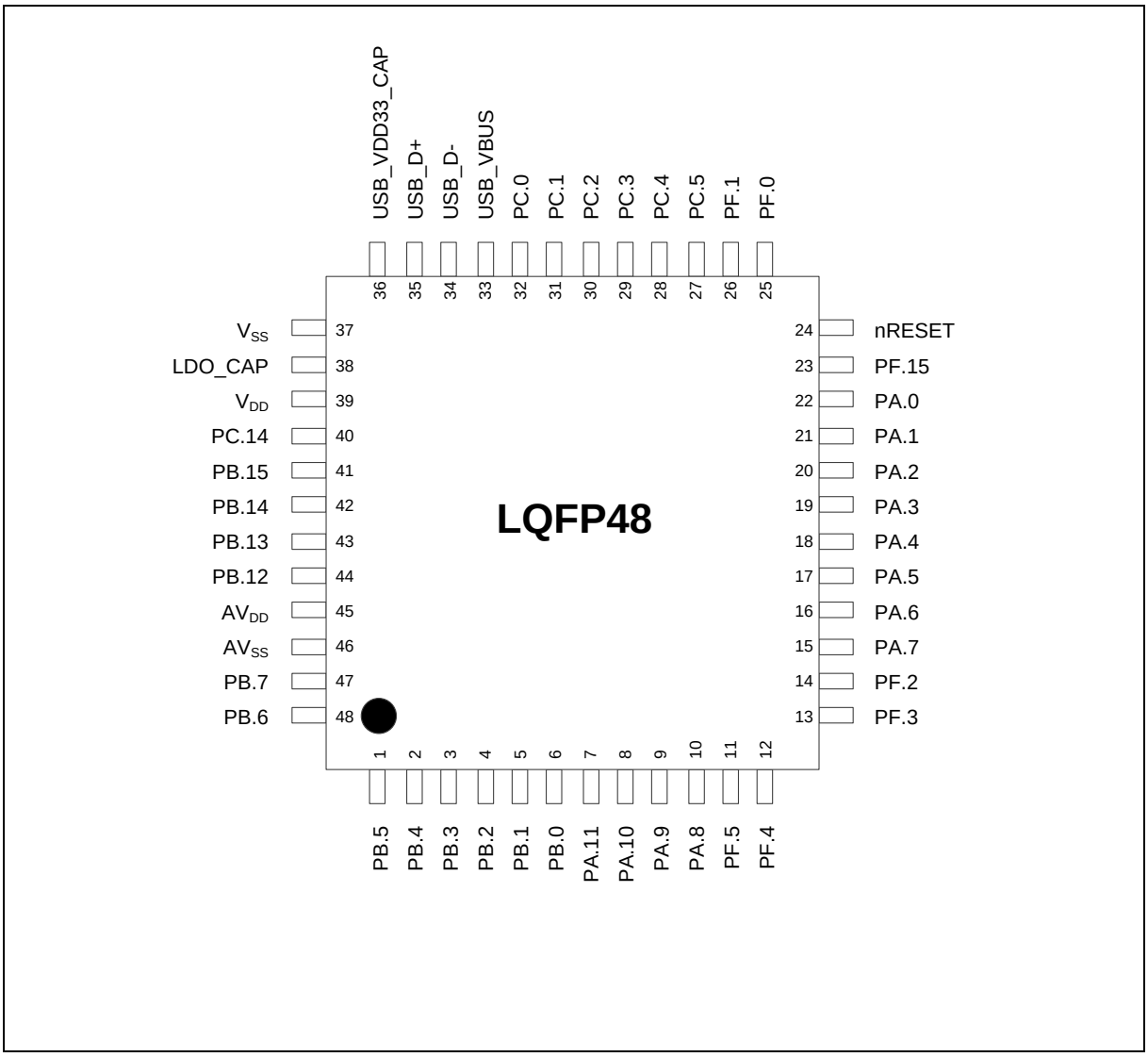

Figure 5.1-31 M032 Series LQFP 48-pin Diagram

5.1.3.5 M032 Series LQFP 64-Pin Diagram

Corresponding Part Number: M032SE3AE, M032SG6AE, M032SG8AE, M032SIAAE

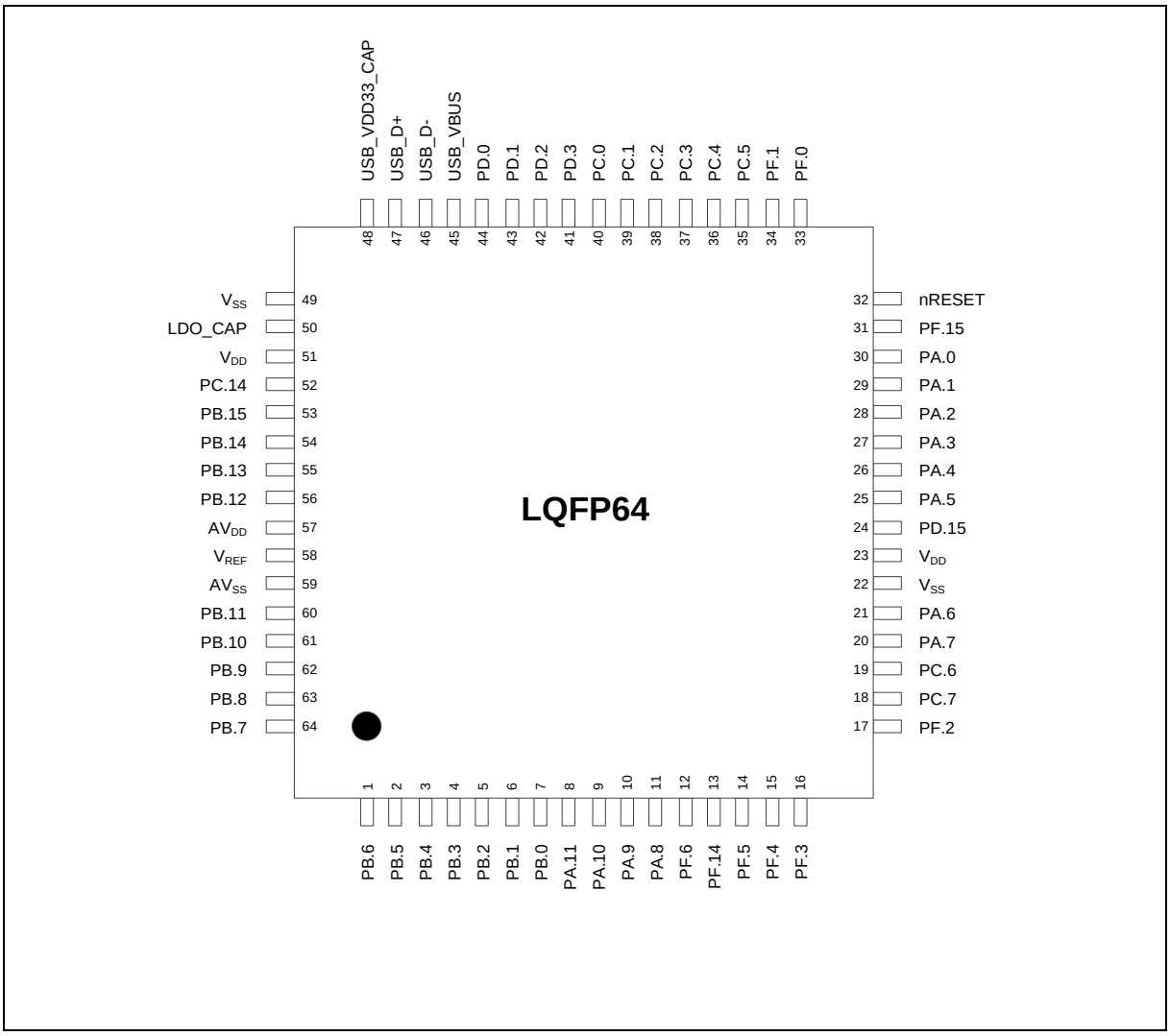

Figure 5.1-32 M032 Series LQFP 64-pin Diagram

5.1.3.6 M032 Series LQFP 128-Pin Diagram

Corresponding Part Number: M032KG6AE, M032KG8AE, M032KIAAE

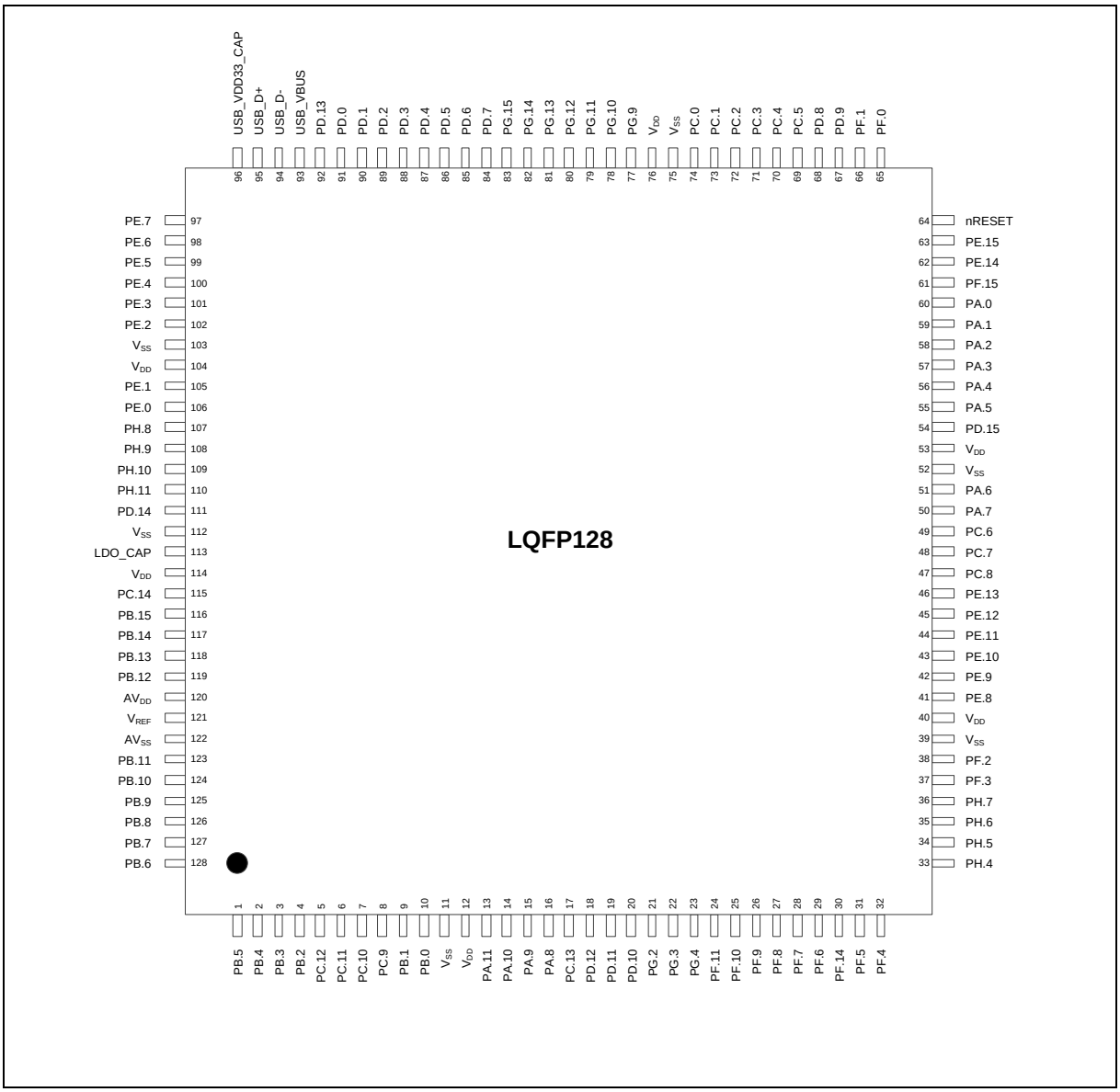

Figure 5.1-33 M032 Series LQFP 128-pin Diagram

5.1.4 M032 Series Multi-function Pin Diagram

5.1.4.1 M032 Series TSSOP 20-Pin Multi-function Pin Diagram

Corresponding Part Number: M032FC1AE

M032FC1AE

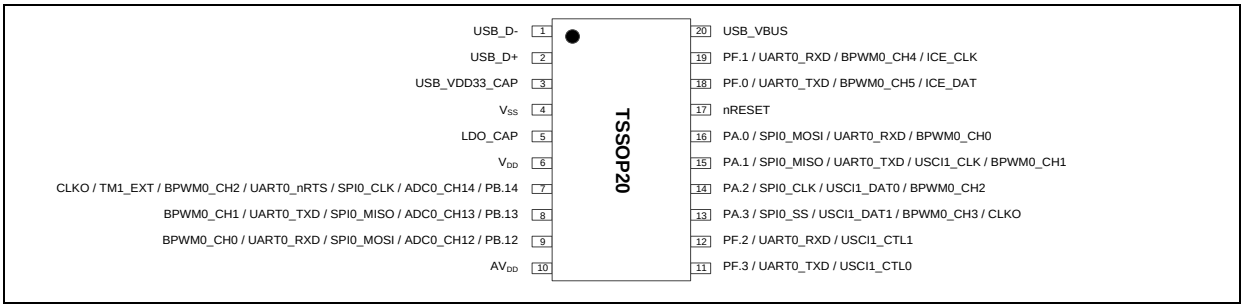

Figure 5.1-34 M032FC1AE Multi-function Pin Diagram

Pin	M032FC1AE Pin Function
1	USB_D-
2	USB_D+
3	USB_V_{DD}33_CAP
4	VSS
5	LDO_CAP
6	V_{DD}
7	PB.14 / ADC0_CH14 / SPI0_CLK / UART0_nRTS / BPWM0_CH2 / TM1_EXT / CLKO
8	PB.13 / ADC0_CH13 / SPI0_MISO / UART0_TXD / BPWM0_CH1
9	PB.12 / ADC0_CH12 / SPI0_MOSI / UART0_RXD / BPWM0_CH0
10	AV_{DD}
11	PF.3 / UART0_TXD / USCI1_CTL0
12	PF.2 / UART0_RXD / USCI1_CTL1
13	PA.3 / SPI0_SS / USCI1_DAT1 / BPWM0_CH3 / CLKO
14	PA.2 / SPI0_CLK / USCI1_DAT0 / BPWM0_CH2
15	PA.1 / SPI0_MISO / UART0_TXD / USCI1_CLK / BPWM0_CH1
16	PA.0 / SPI0_MOSI / UART0_RXD / BPWM0_CH0
17	nRESET
18	PF.0 / UART0_TXD / BPWM0_CH5 / ICE_DAT
19	PF.1 / UART0_RXD / BPWM0_CH4 / ICE_CLK
20	USB_VBUS

Table 5.1-22 M032FC1AE Multi-function Pin Table

5.1.4.2 M032 Series TSSOP 28-Pin Multi-function Pin Diagram

Corresponding Part Number: M032EC1AE

M032EC1AE

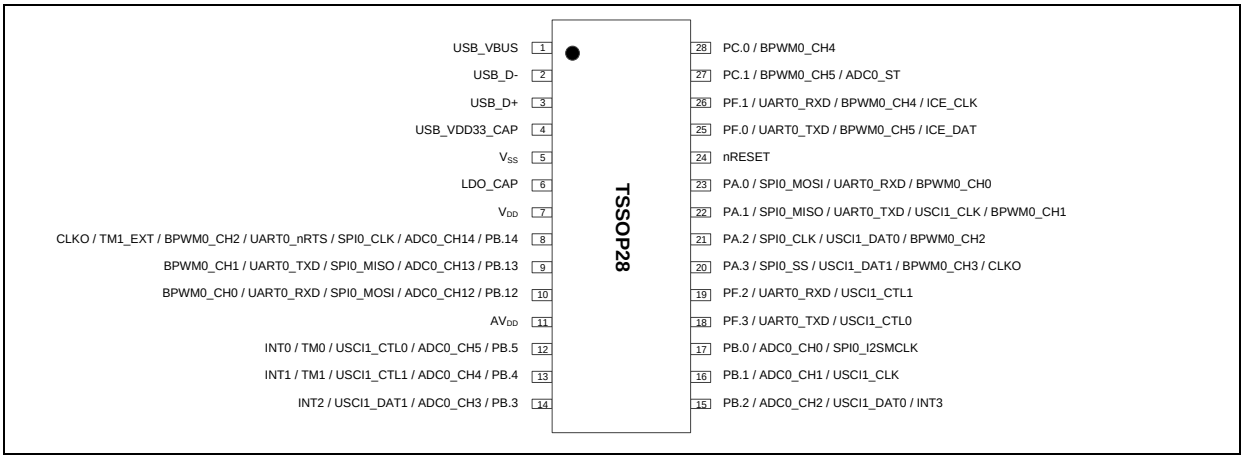

Figure 5.1-35 M032EC1AE Multi-function Pin Diagram

Pin	M032EC1AE Pin Function
1	USB_VBUS
2	USB_D-
3	USB_D+
4	USB_V_{DD}33_CAP
5	VSS
6	LDO_CAP
7	V_{DD}
8	PB.14 / ADC0_CH14 / SPI0_CLK / UART0_nRTS / BPWM0_CH2 / TM1_EXT / CLKO
9	PB.13 / ADC0_CH13 / SPI0_MISO / UART0_TXD / BPWM0_CH1
10	PB.12 / ADC0_CH12 / SPI0_MOSI / UART0_RXD / BPWM0_CH0
11	AV_{DD}
12	PB.5 / ADC0_CH5 / USCI1_CTL0 / TM0 / INT0
13	PB.4 / ADC0_CH4 / USCI1_CTL1 / TM1 / INT1
14	PB.3 / ADC0_CH3 / USCI1_DAT1 / INT2
15	PB.2 / ADC0_CH2 / USCI1_DAT0 / INT3
16	PB.1 / ADC0_CH1 / USCI1_CLK
17	PB.0 / ADC0_CH0 / SPI0_I2SMCLK
18	PF.3 / UART0_TXD / USCI1_CTL0
19	PF.2 / UART0_RXD / USCI1_CTL1

Pin	M032EC1AE Pin Function
20	PA.3 / SPI0_SS / USCI1_DAT1 / BPWM0_CH3 / CLKO
21	PA.2 / SPI0_CLK / USCI1_DAT0 / BPWM0_CH2
22	PA.1 / SPI0_MISO / UART0_TXD / USCI1_CLK / BPWM0_CH1
23	PA.0 / SPI0_MOSI / UART0_RXD / BPWM0_CH0
24	nRESET
25	PF.0 / UART0_TXD / BPWM0_CH5 / ICE_DAT
26	PF.1 / UART0_RXD / BPWM0_CH4 / ICE_CLK
27	PC.1 / BPWM0_CH5 / ADC0_ST
28	PC.0 / BPWM0_CH4

Table 5.1-23 M032EC1AE Multi-function Pin Table

5.1.4.3 M032 Series QFN 33-Pin Multi-function Pin Diagram

Corresponding Part Number: M032TC1AE, M032TD2AE

M032TC1AE

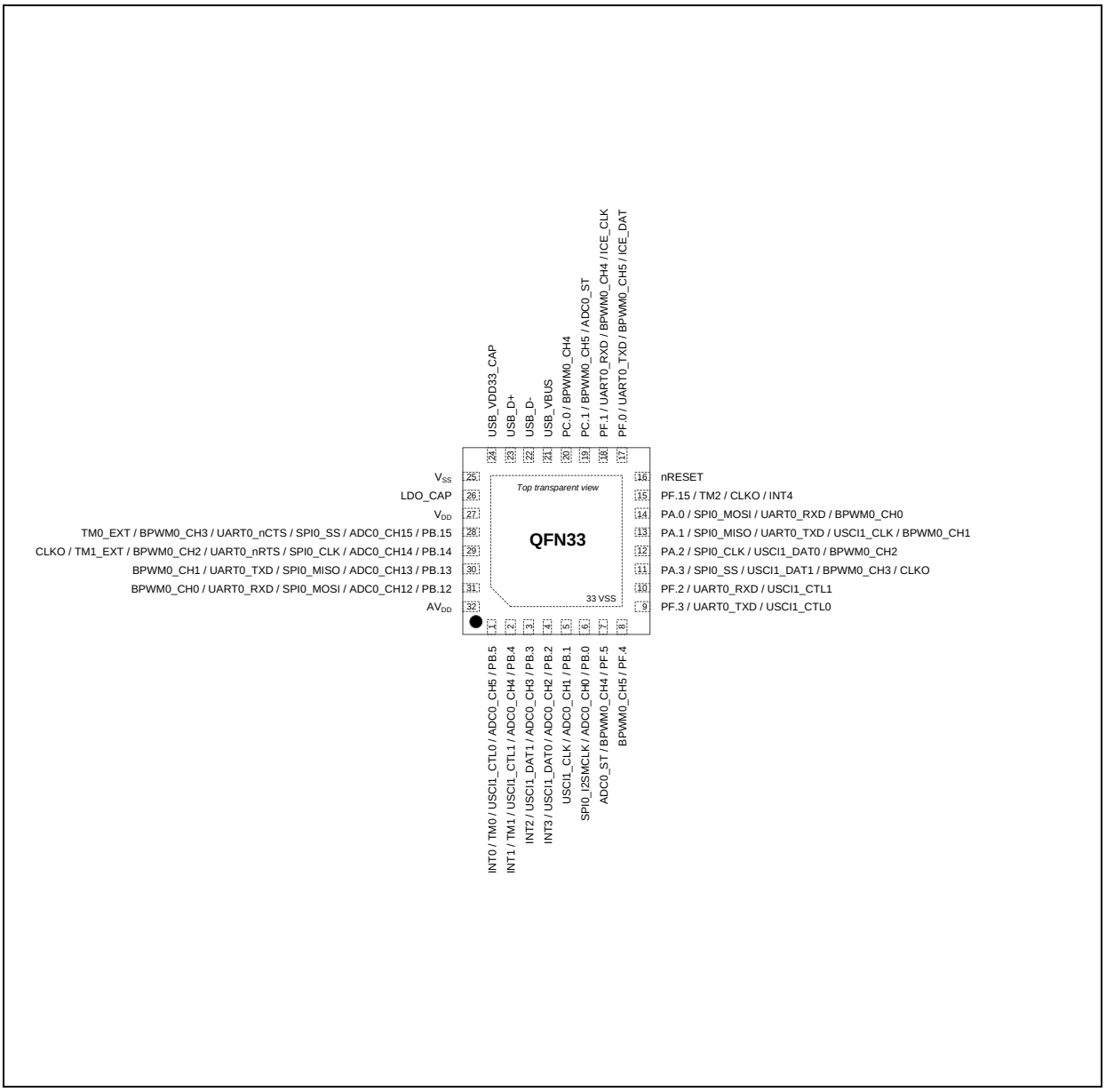

Figure 5.1-36 M032TC1AE Multi-function Pin Diagram

Pin	M032TC1AE Pin Function
1	PB.5 / ADC0_CH5 / USCI1_CTL0 / TM0 / INT0
2	PB.4 / ADC0_CH4 / USCI1_CTL1 / TM1 / INT1

Pin	M032TC1AE Pin Function
3	PB.3 / ADC0_CH3 / USCI1_DAT1 / INT2
4	PB.2 / ADC0_CH2 / USCI1_DAT0 / INT3
5	PB.1 / ADC0_CH1 / USCI1_CLK
6	PB.0 / ADC0_CH0 / SPI0_I2SMCLK
7	PF.5 / BPWM0_CH4 / ADC0_ST
8	PF.4 / BPWM0_CH5
9	PF.3 / UART0_TXD / USCI1_CTL0
10	PF.2 / UART0_RXD / USCI1_CTL1
11	PA.3 / SPI0_SS / USCI1_DAT1 / BPWM0_CH3 / CLKO
12	PA.2 / SPI0_CLK / USCI1_DAT0 / BPWM0_CH2
13	PA.1 / SPI0_MISO / UART0_TXD / USCI1_CLK / BPWM0_CH1
14	PA.0 / SPI0_MOSI / UART0_RXD / BPWM0_CH0
15	PF.15 / CLKO / INT4
16	nRESET
17	PF.0 / UART0_TXD / BPWM0_CH5 / ICE_DAT
18	PF.1 / UART0_RXD / BPWM0_CH4 / ICE_CLK
19	PC.1 / BPWM0_CH5 / ADC0_ST
20	PC.0 / BPWM0_CH4
21	USB_VBUS
22	USB_D-
23	USB_D+
24	USB_V_{DD}33_CAP
25	VSS
26	LDO_CAP
27	V_{DD}
28	PB.15 / ADC0_CH15 / SPI0_SS / UART0_nCTS / BPWM0_CH3 / TM0_EXT
29	PB.14 / ADC0_CH14 / SPI0_CLK / UART0_nRTS / BPWM0_CH2 / TM1_EXT / CLKO
30	PB.13 / ADC0_CH13 / SPI0_MISO / UART0_TXD / BPWM0_CH1
31	PB.12 / ADC0_CH12 / SPI0_MOSI / UART0_RXD / BPWM0_CH0
32	AV_{DD}

Table 5.1-24 M032TC1AE Multi-function Pin Table

M032TD2AE

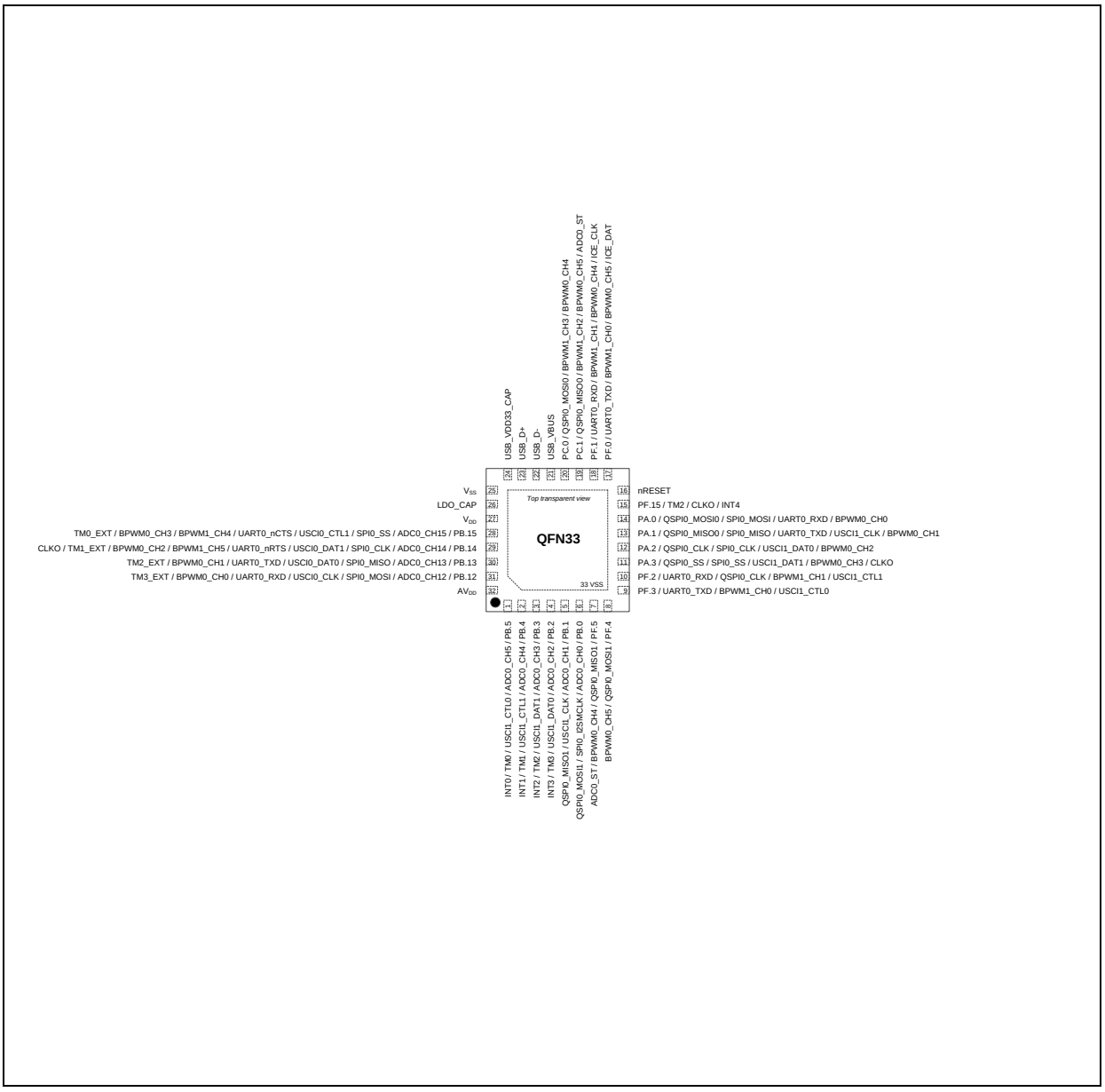

Figure 5.1-37 M032TD2AE Multi-function Pin Diagram

Pin	M032TD2AE Pin Function
1	PB.5 / ADC0_CH5 / USCI1_CTL0 / TM0 / INT0
2	PB.4 / ADC0_CH4 / USCI1_CTL1 / TM1 / INT1
3	PB.3 / ADC0_CH3 / USCI1_DAT1 / TM2 / INT2
4	PB.2 / ADC0_CH2 / USCI1_DAT0 / TM3 / INT3
5	PB.1 / ADC0_CH1 / USCI1_CLK / QSPI0_MISO1

Pin	M032TD2AE Pin Function
6	PB.0 / ADC0_CH0 / SPI0_I2SMCLK / QSPI0_MOSI1
7	PF.5 / QSPI0_MISO1 / BPWM0_CH4 / ADC0_ST
8	PF.4 / QSPI0_MOSI1 / BPWM0_CH5
9	PF.3 / UART0_TXD / BPWM1_CH0 / USCI1_CTL0
10	PF.2 / UART0_RXD / QSPI0_CLK / BPWM1_CH1 / USCI1_CTL1
11	PA.3 / QSPI0_SS / SPI0_SS / USCI1_DAT1 / BPWM0_CH3 / CLKO
12	PA.2 / QSPI0_CLK / SPI0_CLK / USCI1_DAT0 / BPWM0_CH2
13	PA.1 / QSPI0_MISO0 / SPI0_MISO / UART0_TXD / USCI1_CLK / BPWM0_CH1
14	PA.0 / QSPI0_MOSI0 / SPI0_MOSI / UART0_RXD / BPWM0_CH0
15	PF.15 / TM2 / CLKO / INT4
16	nRESET
17	PF.0 / UART0_TXD / BPWM1_CH0 / BPWM0_CH5 / ICE_DAT
18	PF.1 / UART0_RXD / BPWM1_CH1 / BPWM0_CH4 / ICE_CLK
19	PC.1 / QSPI0_MISO0 / BPWM1_CH2 / BPWM0_CH5 / ADC0_ST
20	PC.0 / QSPI0_MOSI0 / BPWM1_CH3 / BPWM0_CH4
21	USB_VBUS
22	USB_D-
23	USB_D+
24	USB_V_{DD}33_CAP
25	VSS
26	LDO_CAP
27	V_{DD}
28	PB.15 / ADC0_CH15 / SPI0_SS / USCI0_CTL1 / UART0_nCTS / BPWM1_CH4 / BPWM0_CH3 / TM0_EXT
29	PB.14 / ADC0_CH14 / SPI0_CLK / USCI0_DAT1 / UART0_nRTS / BPWM1_CH5 / BPWM0_CH2 / TM1_EXT / CLKO
30	PB.13 / ADC0_CH13 / SPI0_MISO / USCI0_DAT0 / UART0_TXD / BPWM0_CH1 / TM2_EXT
31	PB.12 / ADC0_CH12 / SPI0_MOSI / USCI0_CLK / UART0_RXD / BPWM0_CH0 / TM3_EXT
32	AV_{DD}

Table 5.1-25 M032TD2AE Multi-function Pin Table

5.1.4.4 M032 Series LQFP 48-Pin Multi-function Pin Diagram

Corresponding Part Number: M032LC2AE, M032LD2AE, M032LE3AE, M032LG6AE, M032LG8AE

M032LC2AE

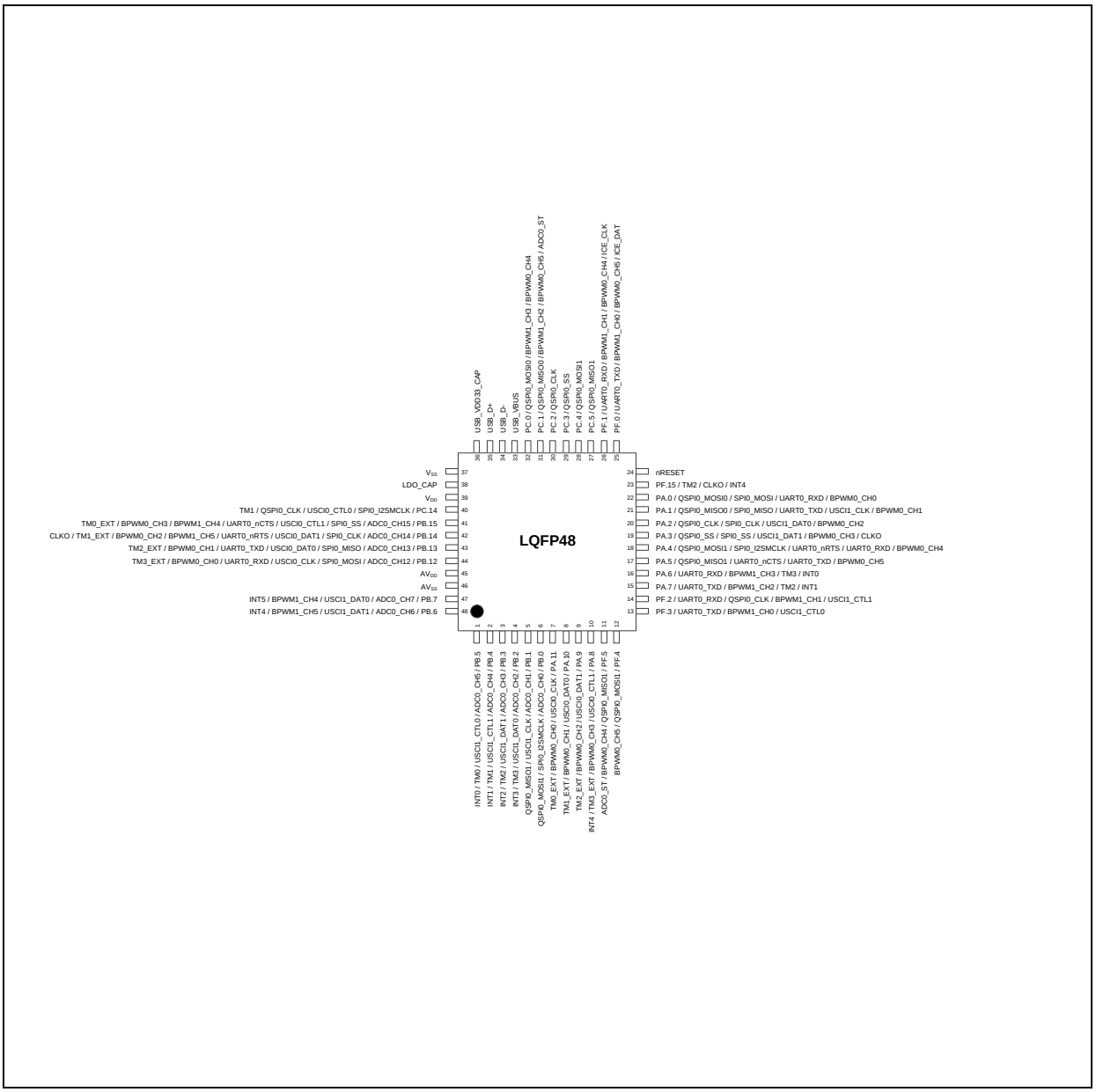

Figure 5.1-38 M032LC2AE Multi-function Pin Diagram

Pin	M032LC2AE Pin Function
1	PB.5 / ADC0_CH5 / USCI1_CTL0 / TM0 / INT0
2	PB.4 / ADC0_CH4 / USCI1_CTL1 / TM1 / INT1
3	PB.3 / ADC0_CH3 / USCI1_DAT1 / TM2 / INT2
4	PB.2 / ADC0_CH2 / USCI1_DAT0 / TM3 / INT3
5	PB.1 / ADC0_CH1 / USCI1_CLK / QSPI0_MISO1

Pin	M032LC2AE Pin Function
6	PB.0 / ADC0_CH0 / SPI0_I2SMCLK / QSPI0_MOSI1
7	PA.11 / USCI0_CLK / BPWM0_CH0 / TM0_EXT
8	PA.10 / USCI0_DAT0 / BPWM0_CH1 / TM1_EXT
9	PA.9 / USCI0_DAT1 / BPWM0_CH2 / TM2_EXT
10	PA.8 / USCI0_CTL1 / BPWM0_CH3 / TM3_EXT / INT4
11	PF.5 / QSPI0_MISO1 / BPWM0_CH4 / ADC0_ST
12	PF.4 / QSPI0_MOSI1 / BPWM0_CH5
13	PF.3 / UART0_TXD / BPWM1_CH0 / USCI1_CTL0
14	PF.2 / UART0_RXD / QSPI0_CLK / BPWM1_CH1 / USCI1_CTL1
15	PA.7 / UART0_TXD / BPWM1_CH2 / TM2 / INT1
16	PA.6 / UART0_RXD / BPWM1_CH3 / TM3 / INT0
17	PA.5 / QSPI0_MISO1 / UART0_nCTS / UART0_TXD / BPWM0_CH5
18	PA.4 / QSPI0_MOSI1 / SPI0_I2SMCLK / UART0_nRTS / UART0_RXD / BPWM0_CH4
19	PA.3 / QSPI0_SS / SPI0_SS / USCI1_DAT1 / BPWM0_CH3 / CLKO
20	PA.2 / QSPI0_CLK / SPI0_CLK / USCI1_DAT0 / BPWM0_CH2
21	PA.1 / QSPI0_MISO0 / SPI0_MISO / UART0_TXD / USCI1_CLK / BPWM0_CH1
22	PA.0 / QSPI0_MOSI0 / SPI0_MOSI / UART0_RXD / BPWM0_CH0
23	PF.15 / TM2 / CLKO / INT4
24	nRESET
25	PF.0 / UART0_TXD / BPWM1_CH0 / BPWM0_CH5 / ICE_DAT
26	PF.1 / UART0_RXD / BPWM1_CH1 / BPWM0_CH4 / ICE_CLK
27	PC.5 / QSPI0_MISO1
28	PC.4 / QSPI0_MOSI1
29	PC.3 / QSPI0_SS
30	PC.2 / QSPI0_CLK
31	PC.1 / QSPI0_MISO0 / BPWM1_CH2 / BPWM0_CH5 / ADC0_ST
32	PC.0 / QSPI0_MOSI0 / BPWM1_CH3 / BPWM0_CH4
33	USB_VBUS
34	USB_D-
35	USB_D+
36	USB_V_{DD}33_CAP
37	VSS
38	LDO_CAP

Pin	M032LC2AE Pin Function
39	V_{DD}
40	PC.14 / SPI0_I2SMCLK / USCI0_CTL0 / QSPI0_CLK / TM1
41	PB.15 / ADC0_CH15 / SPI0_SS / USCI0_CTL1 / UART0_nCTS / BPWM1_CH4 / BPWM0_CH3 / TM0_EXT
42	PB.14 / ADC0_CH14 / SPI0_CLK / USCI0_DAT1 / UART0_nRTS / BPWM1_CH5 / BPWM0_CH2 / TM1_EXT / CLKO
43	PB.13 / ADC0_CH13 / SPI0_MISO / USCI0_DAT0 / UART0_TXD / BPWM0_CH1 / TM2_EXT
44	PB.12 / ADC0_CH12 / SPI0_MOSI / USCI0_CLK / UART0_RXD / BPWM0_CH0 / TM3_EXT
45	AV_{DD}
46	AVSS
47	PB.7 / ADC0_CH7 / USCI1_DAT0 / BPWM1_CH4 / INT5
48	PB.6 / ADC0_CH6 / USCI1_DAT1 / BPWM1_CH5 / INT4

Table 5.1-26 M032LC2AE Multi-function Pin Table

M032LD2AE

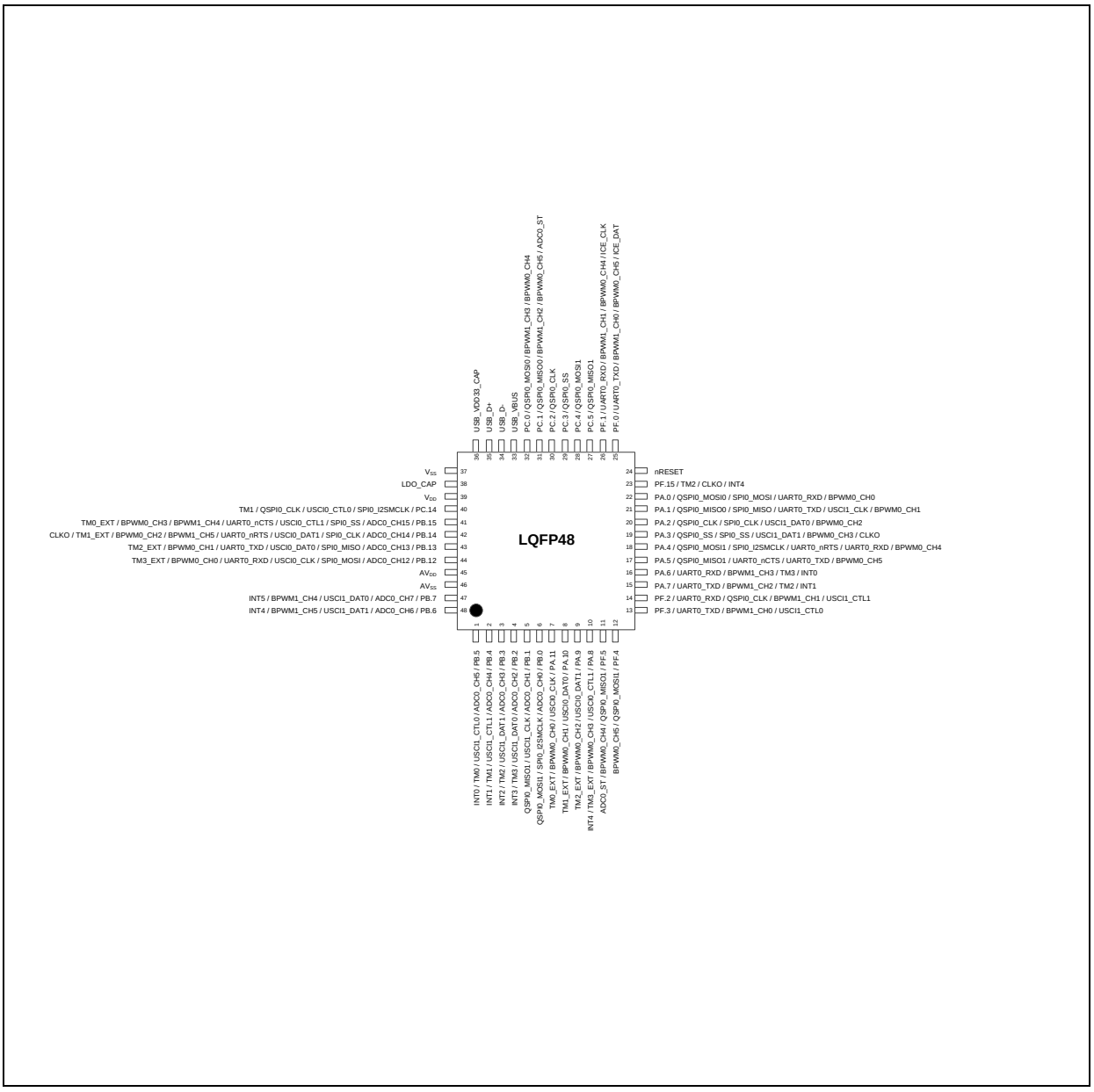

Figure 5.1-39 M032LD2AE Multi-function Pin Diagram

Pin	M032LD2AE Pin Function
1	PB.5 / ADC0_CH5 / USCI1_CTL0 / TM0 / INT0
2	PB.4 / ADC0_CH4 / USCI1_CTL1 / TM1 / INT1
3	PB.3 / ADC0_CH3 / USCI1_DAT1 / TM2 / INT2
4	PB.2 / ADC0_CH2 / USCI1_DAT0 / TM3 / INT3
5	PB.1 / ADC0_CH1 / USCI1_CLK / QSPI0_MISO1

Pin	M032LD2AE Pin Function
6	PB.0 / ADC0_CH0 / SPI0_I2SMCLK / QSPI0_MOSI1
7	PA.11 / USCI0_CLK / BPWM0_CH0 / TM0_EXT
8	PA.10 / USCI0_DAT0 / BPWM0_CH1 / TM1_EXT
9	PA.9 / USCI0_DAT1 / BPWM0_CH2 / TM2_EXT
10	PA.8 / USCI0_CTL1 / BPWM0_CH3 / TM3_EXT / INT4
11	PF.5 / QSPI0_MISO1 / BPWM0_CH4 / ADC0_ST
12	PF.4 / QSPI0_MOSI1 / BPWM0_CH5
13	PF.3 / UART0_TXD / BPWM1_CH0 / USCI1_CTL0
14	PF.2 / UART0_RXD / QSPI0_CLK / BPWM1_CH1 / USCI1_CTL1
15	PA.7 / UART0_TXD / BPWM1_CH2 / TM2 / INT1
16	PA.6 / UART0_RXD / BPWM1_CH3 / TM3 / INT0
17	PA.5 / QSPI0_MISO1 / UART0_nCTS / UART0_TXD / BPWM0_CH5
18	PA.4 / QSPI0_MOSI1 / SPI0_I2SMCLK / UART0_nRTS / UART0_RXD / BPWM0_CH4
19	PA.3 / QSPI0_SS / SPI0_SS / USCI1_DAT1 / BPWM0_CH3 / CLKO
20	PA.2 / QSPI0_CLK / SPI0_CLK / USCI1_DAT0 / BPWM0_CH2
21	PA.1 / QSPI0_MISO0 / SPI0_MISO / UART0_TXD / USCI1_CLK / BPWM0_CH1
22	PA.0 / QSPI0_MOSI0 / SPI0_MOSI / UART0_RXD / BPWM0_CH0
23	PF.15 / TM2 / CLKO / INT4
24	nRESET
25	PF.0 / UART0_TXD / BPWM1_CH0 / BPWM0_CH5 / ICE_DAT
26	PF.1 / UART0_RXD / BPWM1_CH1 / BPWM0_CH4 / ICE_CLK
27	PC.5 / QSPI0_MISO1
28	PC.4 / QSPI0_MOSI1
29	PC.3 / QSPI0_SS
30	PC.2 / QSPI0_CLK
31	PC.1 / QSPI0_MISO0 / BPWM1_CH2 / BPWM0_CH5 / ADC0_ST
32	PC.0 / QSPI0_MOSI0 / BPWM1_CH3 / BPWM0_CH4
33	USB_VBUS
34	USB_D-
35	USB_D+
36	USB_V_{DD}33_CAP
37	VSS
38	LDO_CAP

Pin	M032LD2AE Pin Function
39	V_{DD}
40	PC.14 / SPI0_I2SMCLK / USCI0_CTL0 / QSPI0_CLK / TM1
41	PB.15 / ADC0_CH15 / SPI0_SS / USCI0_CTL1 / UART0_nCTS / BPWM1_CH4 / BPWM0_CH3 / TM0_EXT
42	PB.14 / ADC0_CH14 / SPI0_CLK / USCI0_DAT1 / UART0_nRTS / BPWM1_CH5 / BPWM0_CH2 / TM1_EXT / CLKO
43	PB.13 / ADC0_CH13 / SPI0_MISO / USCI0_DAT0 / UART0_TXD / BPWM0_CH1 / TM2_EXT
44	PB.12 / ADC0_CH12 / SPI0_MOSI / USCI0_CLK / UART0_RXD / BPWM0_CH0 / TM3_EXT
45	AV_{DD}
46	AVSS
47	PB.7 / ADC0_CH7 / USCI1_DAT0 / BPWM1_CH4 / INT5
48	PB.6 / ADC0_CH6 / USCI1_DAT1 / BPWM1_CH5 / INT4

Table 5.1-27 M032LD2AE Multi-function Pin Table

M032LE3AE

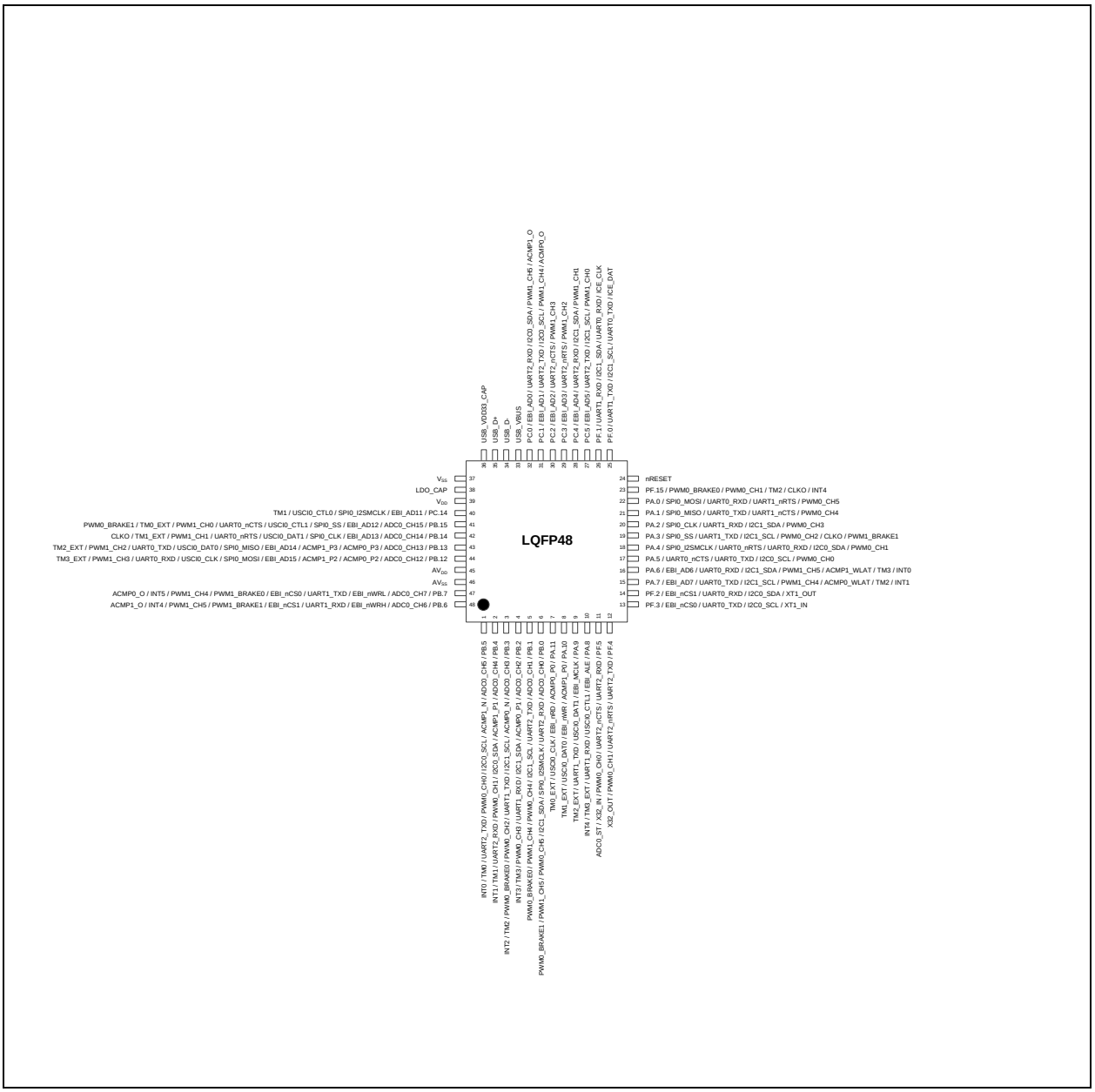

Figure 5.1-40 M032LE3AE Multi-function Pin Diagram

Pin	M032LE3AE Pin Function
1	PB.5 / ADC0_CH5 / ACMP1_N / I2C0_SCL / PWM0_CH0 / UART2_TXD / TM0 / INT0
2	PB.4 / ADC0_CH4 / ACMP1_P1 / I2C0_SDA / PWM0_CH1 / UART2_RXD / TM1 / INT1
3	PB.3 / ADC0_CH3 / ACMP0_N / I2C1_SCL / UART1_TXD / PWM0_CH2 / PWM0_BRAKE0 / TM2 / INT2
4	PB.2 / ADC0_CH2 / ACMP0_P1 / I2C1_SDA / UART1_RXD / PWM0_CH3 / TM3 / INT3

Pin	M032LE3AE Pin Function
5	PB.1 / ADC0_CH1 / UART2_TXD / I2C1_SCL / PWM0_CH4 / PWM1_CH4 / PWM0_BRAKE0
6	PB.0 / ADC0_CH0 / UART2_RXD / SPI0_I2SMCLK / I2C1_SDA / PWM0_CH5 / PWM1_CH5 / PWM0_BRAKE1
7	PA.11 / ACMP0_P0 / EBI_nRD / USCI0_CLK / TM0_EXT
8	PA.10 / ACMP1_P0 / EBI_nWR / USCI0_DAT0 / TM1_EXT
9	PA.9 / EBI_MCLK / USCI0_DAT1 / UART1_TXD / TM2_EXT
10	PA.8 / EBI_ALE / USCI0_CTL1 / UART1_RXD / TM3_EXT / INT4
11	PF.5 / UART2_RXD / UART2_nCTS / PWM0_CH0 / X32_IN / ADC0_ST
12	PF.4 / UART2_TXD / UART2_nRTS / PWM0_CH1 / X32_OUT
13	PF.3 / EBI_nCS0 / UART0_TXD / I2C0_SCL / XT1_IN
14	PF.2 / EBI_nCS1 / UART0_RXD / I2C0_SDA / XT1_OUT
15	PA.7 / EBI_AD7 / UART0_TXD / I2C1_SCL / PWM1_CH4 / ACMP0_WLAT / TM2 / INT1
16	PA.6 / EBI_AD6 / UART0_RXD / I2C1_SDA / PWM1_CH5 / ACMP1_WLAT / TM3 / INT0
17	PA.5 / UART0_nCTS / UART0_TXD / I2C0_SCL / PWM0_CH0
18	PA.4 / SPI0_I2SMCLK / UART0_nRTS / UART0_RXD / I2C0_SDA / PWM0_CH1
19	PA.3 / SPI0_SS / UART1_TXD / I2C1_SCL / PWM0_CH2 / CLKO / PWM1_BRAKE1
20	PA.2 / SPI0_CLK / UART1_RXD / I2C1_SDA / PWM0_CH3
21	PA.1 / SPI0_MISO / UART0_TXD / UART1_nCTS / PWM0_CH4
22	PA.0 / SPI0_MOSI / UART0_RXD / UART1_nRTS / PWM0_CH5
23	PF.15 / PWM0_BRAKE0 / PWM0_CH1 / TM2 / CLKO / INT4
24	nRESET
25	PF.0 / UART1_TXD / I2C1_SCL / UART0_TXD / ICE_DAT
26	PF.1 / UART1_RXD / I2C1_SDA / UART0_RXD / ICE_CLK
27	PC.5 / EBI_AD5 / UART2_TXD / I2C1_SCL / PWM1_CH0
28	PC.4 / EBI_AD4 / UART2_RXD / I2C1_SDA / PWM1_CH1
29	PC.3 / EBI_AD3 / UART2_nRTS / PWM1_CH2
30	PC.2 / EBI_AD2 / UART2_nCTS / PWM1_CH3
31	PC.1 / EBI_AD1 / UART2_TXD / I2C0_SCL / PWM1_CH4 / ACMP0_O
32	PC.0 / EBI_AD0 / UART2_RXD / I2C0_SDA / PWM1_CH5 / ACMP1_O
33	USB_VBUS
34	USB_D-
35	USB_D+
36	USB_V_{DD}33_CAP
37	VSS

Pin	M032LE3AE Pin Function
38	LDO_CAP
39	V_{DD}
40	PC.14 / EBI_AD11 / SPI0_I2SMCLK / USCI0_CTL0 / TM1
41	PB.15 / ADC0_CH15 / EBI_AD12 / SPI0_SS / USCI0_CTL1 / UART0_nCTS / PWM1_CH0 / TM0_EXT / PWM0_BRAKE1
42	PB.14 / ADC0_CH14 / EBI_AD13 / SPI0_CLK / USCI0_DAT1 / UART0_nRTS / PWM1_CH1 / TM1_EXT / CLKO
43	PB.13 / ADC0_CH13 / ACMP0_P3 / ACMP1_P3 / EBI_AD14 / SPI0_MISO / USCI0_DAT0 / UART0_TXD / PWM1_CH2 / TM2_EXT
44	PB.12 / ADC0_CH12 / ACMP0_P2 / ACMP1_P2 / EBI_AD15 / SPI0_MOSI / USCI0_CLK / UART0_RXD / PWM1_CH3 / TM3_EXT
45	AV_{DD}
46	AVSS
47	PB.7 / ADC0_CH7 / EBI_nWRL / UART1_TXD / EBI_nCS0 / PWM1_BRAKE0 / PWM1_CH4 / INT5 / ACMP0_O
48	PB.6 / ADC0_CH6 / EBI_nWRH / UART1_RXD / EBI_nCS1 / PWM1_BRAKE1 / PWM1_CH5 / INT4 / ACMP1_O

Table 5.1-28 M032LE3AE Multi-function Pin Table

M032LG6AE

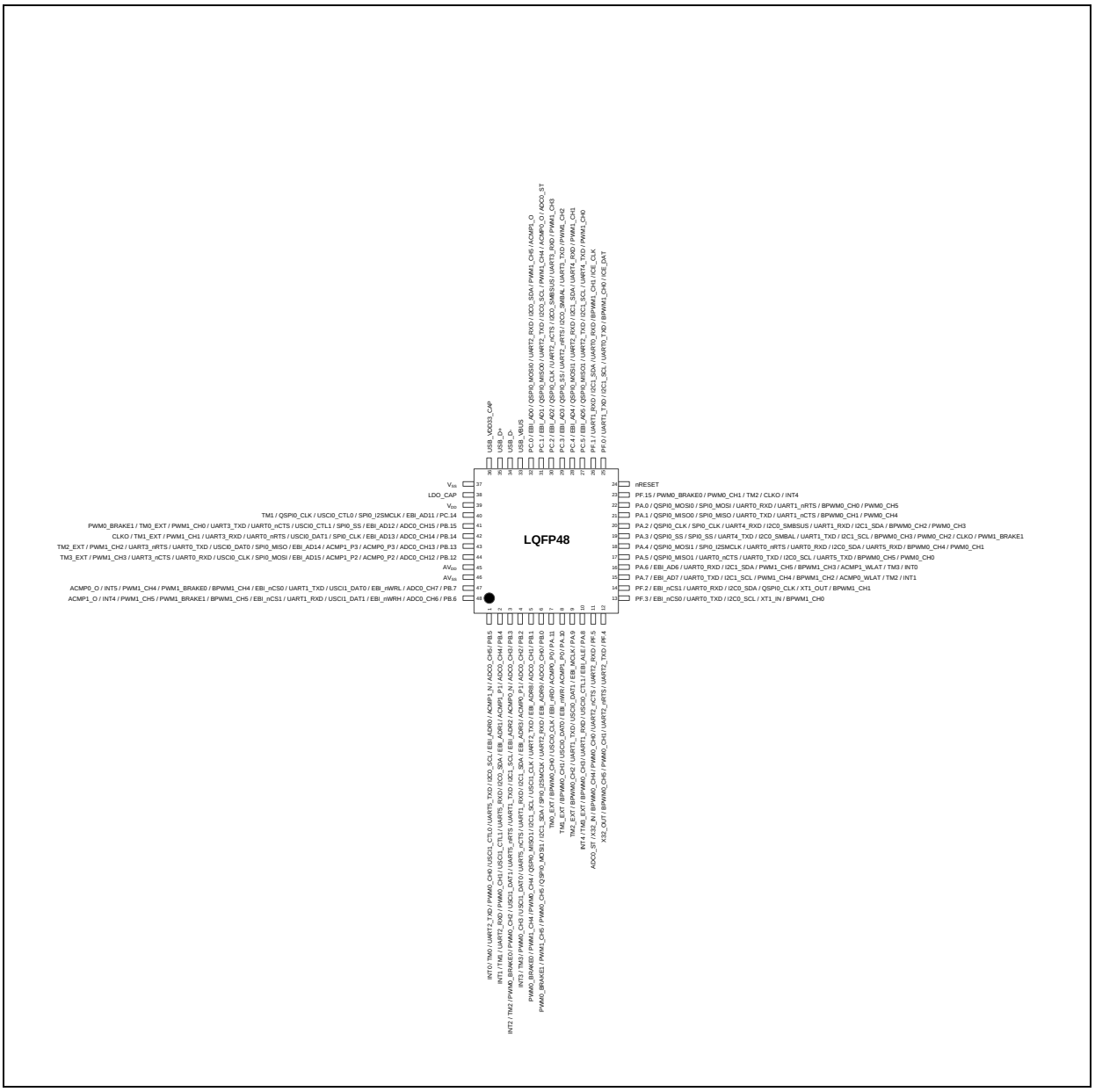

Figure 5.1-41 M032LG6AE Multi-function Pin Diagram

Pin	M032LG6AE Pin Function
1	PB.5 / ADC0_CH5 / ACMP1_N / EBI_ADR0 / I2C0_SCL / UART5_TXD / USCI1_CTL0 / PWM0_CH0 / UART2_TXD / TM0 / INT0
2	PB.4 / ADC0_CH4 / ACMP1_P1 / EBI_ADR1 / I2C0_SDA / UART5_RXD / USCI1_CTL1 / PWM0_CH1 / UART2_RXD / TM1 / INT1
3	PB.3 / ADC0_CH3 / ACMP0_N / EBI_ADR2 / I2C1_SCL / UART1_TXD / UART5_nRTS / USCI1_DAT1 / PWM0_CH2 / PWM0_BRAKE0 / TM2 / INT2

Pin	M032LG6AE Pin Function
4	PB.2 / ADC0_CH2 / ACMP0_P1 / EBI_ADR3 / I2C1_SDA / UART1_RXD / UART5_nCTS / USCI1_DAT0 / PWM0_CH3 / TM3 / INT3
5	PB.1 / ADC0_CH1 / EBI_ADR8 / UART2_TXD / USCI1_CLK / I2C1_SCL / QSPI0_MISO1 / PWM0_CH4 / PWM1_CH4 / PWM0_BRAKE0
6	PB.0 / ADC0_CH0 / EBI_ADR9 / UART2_RXD / SPI0_I2SMCLK / I2C1_SDA / QSPI0_MOSI1 / PWM0_CH5 / PWM1_CH5 / PWM0_BRAKE1
7	PA.11 / ACMP0_P0 / EBI_nRD / USCI0_CLK / BPWM0_CH0 / TM0_EXT
8	PA.10 / ACMP1_P0 / EBI_nWR / USCI0_DAT0 / BPWM0_CH1 / TM1_EXT
9	PA.9 / EBI_MCLK / USCI0_DAT1 / UART1_TXD / BPWM0_CH2 / TM2_EXT
10	PA.8 / EBI_ALE / USCI0_CTL1 / UART1_RXD / BPWM0_CH3 / TM3_EXT / INT4
11	PF.5 / UART2_RXD / UART2_nCTS / PWM0_CH0 / BPWM0_CH4 / X32_IN / ADC0_ST
12	PF.4 / UART2_TXD / UART2_nRTS / PWM0_CH1 / BPWM0_CH5 / X32_OUT
13	PF.3 / EBI_nCS0 / UART0_TXD / I2C0_SCL / XT1_IN / BPWM1_CH0
14	PF.2 / EBI_nCS1 / UART0_RXD / I2C0_SDA / QSPI0_CLK / XT1_OUT / BPWM1_CH1
15	PA.7 / EBI_AD7 / UART0_TXD / I2C1_SCL / PWM1_CH4 / BPWM1_CH2 / ACMP0_WLAT / TM2 / INT1
16	PA.6 / EBI_AD6 / UART0_RXD / I2C1_SDA / PWM1_CH5 / BPWM1_CH3 / ACMP1_WLAT / TM3 / INT0
17	PA.5 / QSPI0_MISO1 / UART0_nCTS / UART0_TXD / I2C0_SCL / UART5_TXD / BPWM0_CH5 / PWM0_CH0
18	PA.4 / QSPI0_MOSI1 / SPI0_I2SMCLK / UART0_nRTS / UART0_RXD / I2C0_SDA / UART5_RXD / BPWM0_CH4 / PWM0_CH1
19	PA.3 / QSPI0_SS / SPI0_SS / UART4_TXD / I2C0_SMBAL / UART1_TXD / I2C1_SCL / BPWM0_CH3 / PWM0_CH2 / CLKO / PWM1_BRAKE1
20	PA.2 / QSPI0_CLK / SPI0_CLK / UART4_RXD / I2C0_SMBSUS / UART1_RXD / I2C1_SDA / BPWM0_CH2 / PWM0_CH3
21	PA.1 / QSPI0_MISO0 / SPI0_MISO / UART0_TXD / UART1_nCTS / BPWM0_CH1 / PWM0_CH4
22	PA.0 / QSPI0_MOSI0 / SPI0_MOSI / UART0_RXD / UART1_nRTS / BPWM0_CH0 / PWM0_CH5
23	PF.15 / PWM0_BRAKE0 / PWM0_CH1 / TM2 / CLKO / INT4
24	nRESET
25	PF.0 / UART1_TXD / I2C1_SCL / UART0_TXD / BPWM1_CH0 / ICE_DAT
26	PF.1 / UART1_RXD / I2C1_SDA / UART0_RXD / BPWM1_CH1 / ICE_CLK
27	PC.5 / EBI_AD5 / QSPI0_MISO1 / UART2_TXD / I2C1_SCL / UART4_TXD / PWM1_CH0
28	PC.4 / EBI_AD4 / QSPI0_MOSI1 / UART2_RXD / I2C1_SDA / UART4_RXD / PWM1_CH1
29	PC.3 / EBI_AD3 / QSPI0_SS / UART2_nRTS / I2C0_SMBAL / UART3_TXD / PWM1_CH2
30	PC.2 / EBI_AD2 / QSPI0_CLK / UART2_nCTS / I2C0_SMBSUS / UART3_RXD / PWM1_CH3
31	PC.1 / EBI_AD1 / QSPI0_MISO0 / UART2_TXD / I2C0_SCL / PWM1_CH4 / ACMP0_O / ADC0_ST
32	PC.0 / EBI_AD0 / QSPI0_MOSI0 / UART2_RXD / I2C0_SDA / PWM1_CH5 / ACMP1_O
33	USB_VBUS

Pin	M032LG6AE Pin Function
34	USB_D-
35	USB_D+
36	USB_V_{DD}33_CAP
37	VSS
38	LDO_CAP
39	V_{DD}
40	PC.14 / EBI_AD11 / SPI0_I2SMCLK / USCI0_CTL0 / QSPI0_CLK / TM1
41	PB.15 / ADC0_CH15 / EBI_AD12 / SPI0_SS / USCI0_CTL1 / UART0_nCTS / UART3_TXD / PWM1_CH0 / TM0_EXT / PWM0_BRAKE1
42	PB.14 / ADC0_CH14 / EBI_AD13 / SPI0_CLK / USCI0_DAT1 / UART0_nRTS / UART3_RXD / PWM1_CH1 / TM1_EXT / CLKO
43	PB.13 / ADC0_CH13 / ACMP0_P3 / ACMP1_P3 / EBI_AD14 / SPI0_MISO / USCI0_DAT0 / UART0_TXD / UART3_nRTS / PWM1_CH2 / TM2_EXT
44	PB.12 / ADC0_CH12 / ACMP0_P2 / ACMP1_P2 / EBI_AD15 / SPI0_MOSI / USCI0_CLK / UART0_RXD / UART3_nCTS / PWM1_CH3 / TM3_EXT
45	AV_{DD}
46	AVSS
47	PB.7 / ADC0_CH7 / EBI_nWRL / USCI1_DAT0 / UART1_TXD / EBI_nCS0 / BPWM1_CH4 / PWM1_BRAKE0 / PWM1_CH4 / INT5 / ACMP0_O
48	PB.6 / ADC0_CH6 / EBI_nWRH / USCI1_DAT1 / UART1_RXD / EBI_nCS1 / BPWM1_CH5 / PWM1_BRAKE1 / PWM1_CH5 / INT4 / ACMP1_O

Table 5.1-29 M032LG6AE Multi-function Pin Table

M032LG8AE

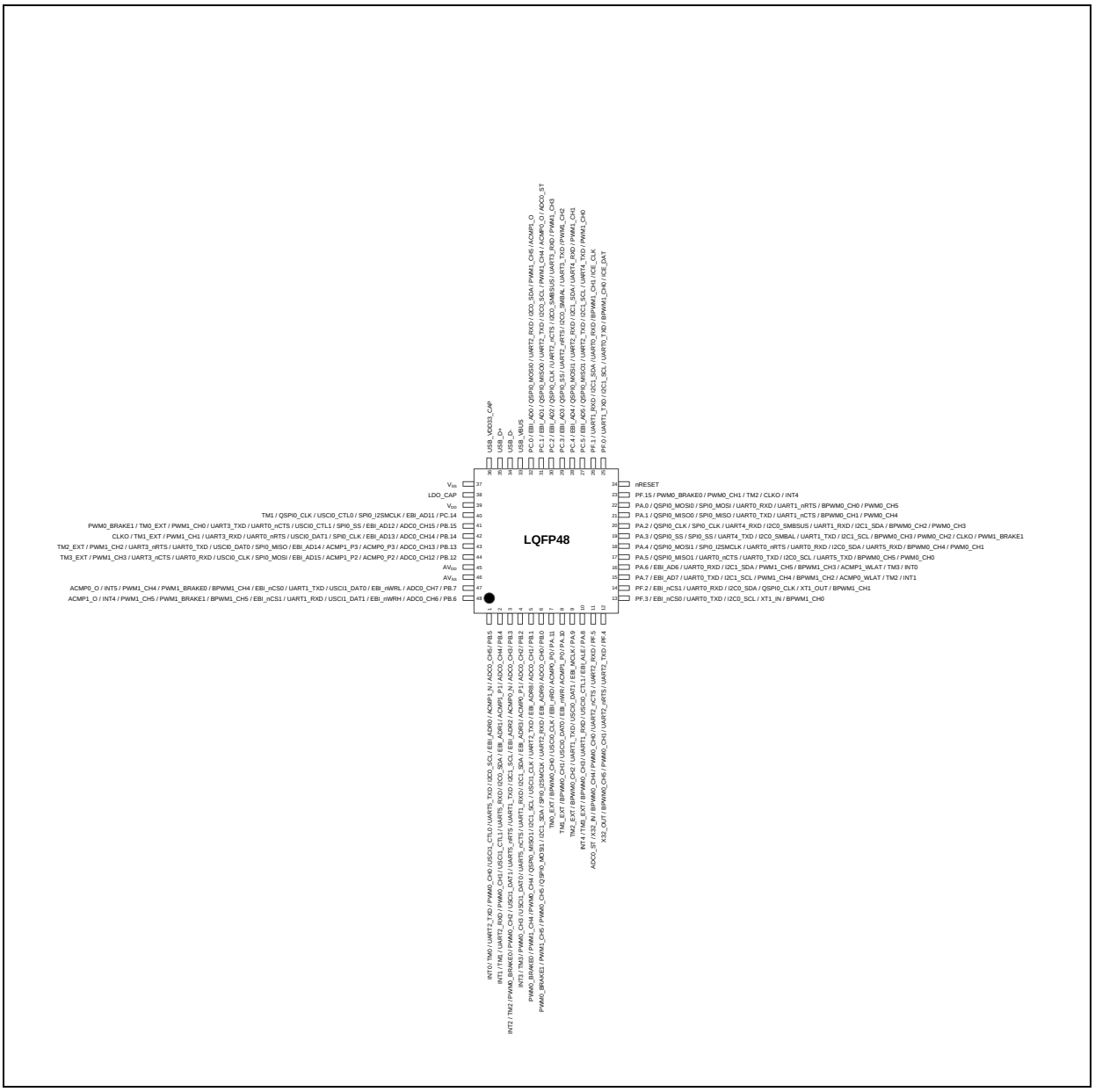

Figure 5.1-42 M032LG8AE Multi-function Pin Diagram

Pin	M032LG8AE Pin Function
1	PB.5 / ADC0_CH5 / ACMP1_N / EBI_ADR0 / I2C0_SCL / UART5_TXD / USCI1_CTL0 / PWM0_CH0 / UART2_TXD / TM0 / INT0
2	PB.4 / ADC0_CH4 / ACMP1_P1 / EBI_ADR1 / I2C0_SDA / UART5_RXD / USCI1_CTL1 / PWM0_CH1 / UART2_RXD / TM1 / INT1
3	PB.3 / ADC0_CH3 / ACMP0_N / EBI_ADR2 / I2C1_SCL / UART1_TXD / UART5_nRTS / USCI1_DAT1 / PWM0_CH2 / PWM0_BRAKE0 / TM2 / INT2

Pin	M032LG8AE Pin Function
4	PB.2 / ADC0_CH2 / ACMP0_P1 / EBI_ADR3 / I2C1_SDA / UART1_RXD / UART5_nCTS / USCI1_DAT0 / PWM0_CH3 / TM3 / INT3
5	PB.1 / ADC0_CH1 / EBI_ADR8 / UART2_TXD / USCI1_CLK / I2C1_SCL / QSPI0_MISO1 / PWM0_CH4 / PWM1_CH4 / PWM0_BRAKE0
6	PB.0 / ADC0_CH0 / EBI_ADR9 / UART2_RXD / SPI0_I2SMCLK / I2C1_SDA / QSPI0_MOSI1 / PWM0_CH5 / PWM1_CH5 / PWM0_BRAKE1
7	PA.11 / ACMP0_P0 / EBI_nRD / USCI0_CLK / BPWM0_CH0 / TM0_EXT
8	PA.10 / ACMP1_P0 / EBI_nWR / USCI0_DAT0 / BPWM0_CH1 / TM1_EXT
9	PA.9 / EBI_MCLK / USCI0_DAT1 / UART1_TXD / BPWM0_CH2 / TM2_EXT
10	PA.8 / EBI_ALE / USCI0_CTL1 / UART1_RXD / BPWM0_CH3 / TM3_EXT / INT4
11	PF.5 / UART2_RXD / UART2_nCTS / PWM0_CH0 / BPWM0_CH4 / X32_IN / ADC0_ST
12	PF.4 / UART2_TXD / UART2_nRTS / PWM0_CH1 / BPWM0_CH5 / X32_OUT
13	PF.3 / EBI_nCS0 / UART0_TXD / I2C0_SCL / XT1_IN / BPWM1_CH0
14	PF.2 / EBI_nCS1 / UART0_RXD / I2C0_SDA / QSPI0_CLK / XT1_OUT / BPWM1_CH1
15	PA.7 / EBI_AD7 / UART0_TXD / I2C1_SCL / PWM1_CH4 / BPWM1_CH2 / ACMP0_WLAT / TM2 / INT1
16	PA.6 / EBI_AD6 / UART0_RXD / I2C1_SDA / PWM1_CH5 / BPWM1_CH3 / ACMP1_WLAT / TM3 / INT0
17	PA.5 / QSPI0_MISO1 / UART0_nCTS / UART0_TXD / I2C0_SCL / UART5_TXD / BPWM0_CH5 / PWM0_CH0
18	PA.4 / QSPI0_MOSI1 / SPI0_I2SMCLK / UART0_nRTS / UART0_RXD / I2C0_SDA / UART5_RXD / BPWM0_CH4 / PWM0_CH1
19	PA.3 / QSPI0_SS / SPI0_SS / UART4_TXD / I2C0_SMBAL / UART1_TXD / I2C1_SCL / BPWM0_CH3 / PWM0_CH2 / CLKO / PWM1_BRAKE1
20	PA.2 / QSPI0_CLK / SPI0_CLK / UART4_RXD / I2C0_SMBSUS / UART1_RXD / I2C1_SDA / BPWM0_CH2 / PWM0_CH3
21	PA.1 / QSPI0_MISO0 / SPI0_MISO / UART0_TXD / UART1_nCTS / BPWM0_CH1 / PWM0_CH4
22	PA.0 / QSPI0_MOSI0 / SPI0_MOSI / UART0_RXD / UART1_nRTS / BPWM0_CH0 / PWM0_CH5
23	PF.15 / PWM0_BRAKE0 / PWM0_CH1 / TM2 / CLKO / INT4
24	nRESET
25	PF.0 / UART1_TXD / I2C1_SCL / UART0_TXD / BPWM1_CH0 / ICE_DAT
26	PF.1 / UART1_RXD / I2C1_SDA / UART0_RXD / BPWM1_CH1 / ICE_CLK
27	PC.5 / EBI_AD5 / QSPI0_MISO1 / UART2_TXD / I2C1_SCL / UART4_TXD / PWM1_CH0
28	PC.4 / EBI_AD4 / QSPI0_MOSI1 / UART2_RXD / I2C1_SDA / UART4_RXD / PWM1_CH1
29	PC.3 / EBI_AD3 / QSPI0_SS / UART2_nRTS / I2C0_SMBAL / UART3_TXD / PWM1_CH2
30	PC.2 / EBI_AD2 / QSPI0_CLK / UART2_nCTS / I2C0_SMBSUS / UART3_RXD / PWM1_CH3
31	PC.1 / EBI_AD1 / QSPI0_MISO0 / UART2_TXD / I2C0_SCL / PWM1_CH4 / ACMP0_O / ADC0_ST
32	PC.0 / EBI_AD0 / QSPI0_MOSI0 / UART2_RXD / I2C0_SDA / PWM1_CH5 / ACMP1_O
33	USB_VBUS

Pin	M032LG8AE Pin Function
34	USB_D-
35	USB_D+
36	USB_V_{DD}33_CAP
37	VSS
38	LDO_CAP
39	V_{DD}
40	PC.14 / EBI_AD11 / SPI0_I2SMCLK / USCI0_CTL0 / QSPI0_CLK / TM1
41	PB.15 / ADC0_CH15 / EBI_AD12 / SPI0_SS / USCI0_CTL1 / UART0_nCTS / UART3_TXD / PWM1_CH0 / TM0_EXT / PWM0_BRAKE1
42	PB.14 / ADC0_CH14 / EBI_AD13 / SPI0_CLK / USCI0_DAT1 / UART0_nRTS / UART3_RXD / PWM1_CH1 / TM1_EXT / CLKO
43	PB.13 / ADC0_CH13 / ACMP0_P3 / ACMP1_P3 / EBI_AD14 / SPI0_MISO / USCI0_DAT0 / UART0_TXD / UART3_nRTS / PWM1_CH2 / TM2_EXT
44	PB.12 / ADC0_CH12 / ACMP0_P2 / ACMP1_P2 / EBI_AD15 / SPI0_MOSI / USCI0_CLK / UART0_RXD / UART3_nCTS / PWM1_CH3 / TM3_EXT
45	AV_{DD}
46	AVSS
47	PB.7 / ADC0_CH7 / EBI_nWRL / USCI1_DAT0 / UART1_TXD / EBI_nCS0 / BPWM1_CH4 / PWM1_BRAKE0 / PWM1_CH4 / INT5 / ACMP0_O
48	PB.6 / ADC0_CH6 / EBI_nWRH / USCI1_DAT1 / UART1_RXD / EBI_nCS1 / BPWM1_CH5 / PWM1_BRAKE1 / PWM1_CH5 / INT4 / ACMP1_O

Table 5.1-30 M032LG8AE Multi-function Pin Table

5.1.4.5 M032 Series LQFP 64-Pin Multi-function Pin Diagram

Corresponding Part Number: M032SE3AE, M032SG6AE, M032SG8AE, M032SIAAE

M032SE3AE

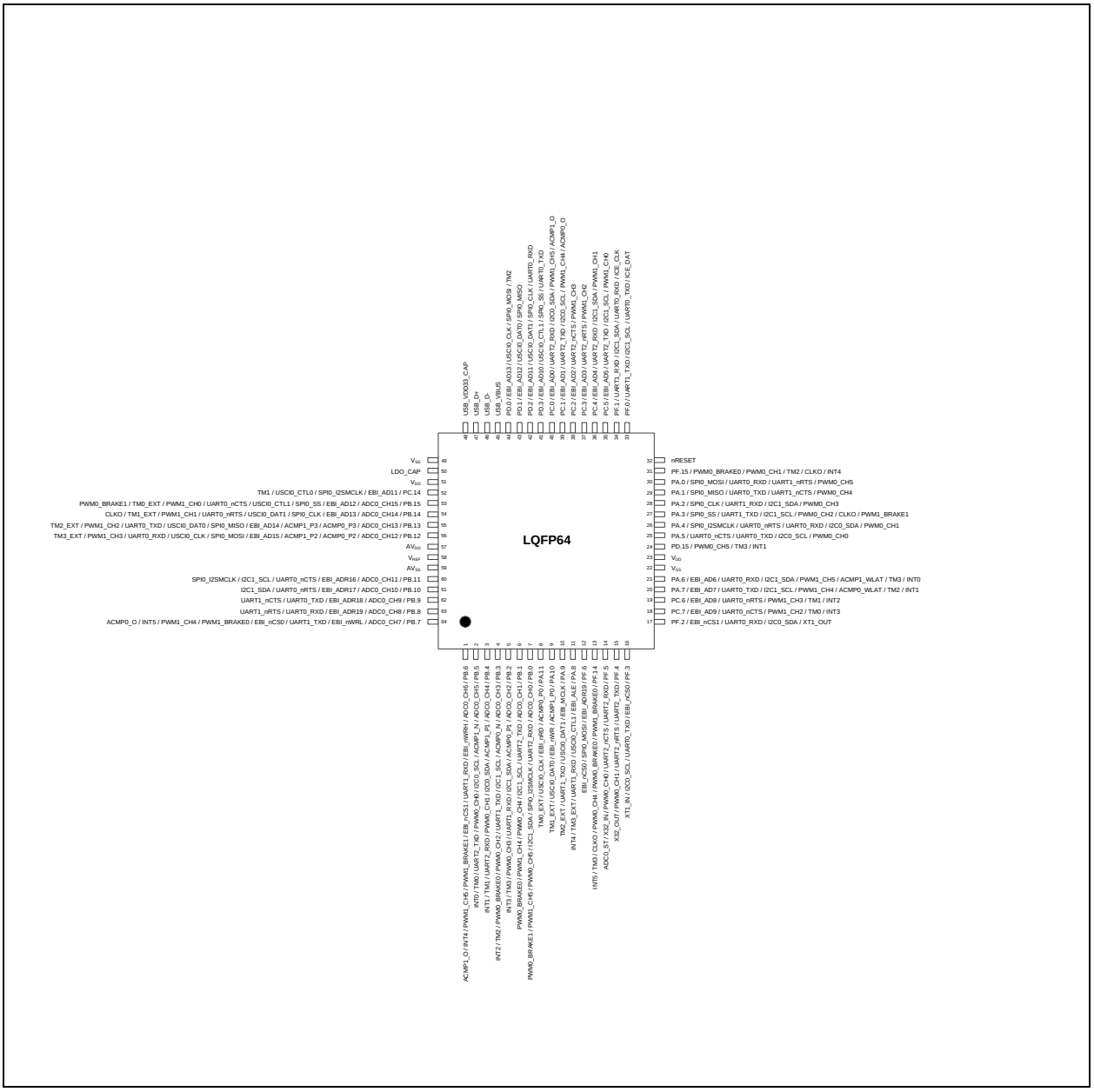

Figure 5.1-43 M032SE3AE Multi-function Pin Diagram

Pin	M032SE3AE Pin Function
1	PB.6 / ADC0_CH6 / EBI_nWRH / UART1_RXD / EBI_nCS1 / PWM1_BRAKE1 / PWM1_CH5 / INT4 / ACMP1_O
2	PB.5 / ADC0_CH5 / ACMP1_N / I2C0_SCL / PWM0_CH0 / UART2_TXD / TM0 / INT0
3	PB.4 / ADC0_CH4 / ACMP1_P1 / I2C0_SDA / PWM0_CH1 / UART2_RXD / TM1 / INT1

Pin	M032SE3AE Pin Function
4	PB.3 / ADC0_CH3 / ACMP0_N / I2C1_SCL / UART1_TXD / PWM0_CH2 / PWM0_BRAKE0 / TM2 / INT2
5	PB.2 / ADC0_CH2 / ACMP0_P1 / I2C1_SDA / UART1_RXD / PWM0_CH3 / TM3 / INT3
6	PB.1 / ADC0_CH1 / UART2_TXD / I2C1_SCL / PWM0_CH4 / PWM1_CH4 / PWM0_BRAKE0
7	PB.0 / ADC0_CH0 / UART2_RXD / SPI0_I2SMCLK / I2C1_SDA / PWM0_CH5 / PWM1_CH5 / PWM0_BRAKE1
8	PA.11 / ACMP0_P0 / EBI_nRD / USCI0_CLK / TM0_EXT
9	PA.10 / ACMP1_P0 / EBI_nWR / USCI0_DAT0 / TM1_EXT
10	PA.9 / EBI_MCLK / USCI0_DAT1 / UART1_TXD / TM2_EXT
11	PA.8 / EBI_ALE / USCI0_CTL1 / UART1_RXD / TM3_EXT / INT4
12	PF.6 / EBI_ADR19 / SPI0_MOSI / EBI_nCS0
13	PF.14 / PWM1_BRAKE0 / PWM0_BRAKE0 / PWM0_CH4 / CLKO / TM3 / INT5
14	PF.5 / UART2_RXD / UART2_nCTS / PWM0_CH0 / X32_IN / ADC0_ST
15	PF.4 / UART2_TXD / UART2_nRTS / PWM0_CH1 / X32_OUT
16	PF.3 / EBI_nCS0 / UART0_TXD / I2C0_SCL / XT1_IN
17	PF.2 / EBI_nCS1 / UART0_RXD / I2C0_SDA / XT1_OUT
18	PC.7 / EBI_AD9 / UART0_nCTS / PWM1_CH2 / TM0 / INT3
19	PC.6 / EBI_AD8 / UART0_nRTS / PWM1_CH3 / TM1 / INT2
20	PA.7 / EBI_AD7 / UART0_TXD / I2C1_SCL / PWM1_CH4 / ACMP0_WLAT / TM2 / INT1
21	PA.6 / EBI_AD6 / UART0_RXD / I2C1_SDA / PWM1_CH5 / ACMP1_WLAT / TM3 / INT0
22	VSS
23	V_{DD}
24	PD.15 / PWM0_CH5 / TM3 / INT1
25	PA.5 / UART0_nCTS / UART0_TXD / I2C0_SCL / PWM0_CH0
26	PA.4 / SPI0_I2SMCLK / UART0_nRTS / UART0_RXD / I2C0_SDA / PWM0_CH1
27	PA.3 / SPI0_SS / UART1_TXD / I2C1_SCL / PWM0_CH2 / CLKO / PWM1_BRAKE1
28	PA.2 / SPI0_CLK / UART1_RXD / I2C1_SDA / PWM0_CH3
29	PA.1 / SPI0_MISO / UART0_TXD / UART1_nCTS / PWM0_CH4
30	PA.0 / SPI0_MOSI / UART0_RXD / UART1_nRTS / PWM0_CH5
31	PF.15 / PWM0_BRAKE0 / PWM0_CH1 / TM2 / CLKO / INT4
32	nRESET
33	PF.0 / UART1_TXD / I2C1_SCL / UART0_TXD / ICE_DAT
34	PF.1 / UART1_RXD / I2C1_SDA / UART0_RXD / ICE_CLK
35	PC.5 / EBI_AD5 / UART2_TXD / I2C1_SCL / PWM1_CH0
36	PC.4 / EBI_AD4 / UART2_RXD / I2C1_SDA / PWM1_CH1

Pin	M032SE3AE Pin Function
37	PC.3 / EBI_AD3 / UART2_nRTS / PWM1_CH2
38	PC.2 / EBI_AD2 / UART2_nCTS / PWM1_CH3
39	PC.1 / EBI_AD1 / UART2_TXD / I2C0_SCL / PWM1_CH4 / ACMP0_O
40	PC.0 / EBI_AD0 / UART2_RXD / I2C0_SDA / PWM1_CH5 / ACMP1_O
41	PD.3 / EBI_AD10 / USCI0_CTL1 / SPI0_SS / UART0_TXD
42	PD.2 / EBI_AD11 / USCI0_DAT1 / SPI0_CLK / UART0_RXD
43	PD.1 / EBI_AD12 / USCI0_DAT0 / SPI0_MISO
44	PD.0 / EBI_AD13 / USCI0_CLK / SPI0_MOSI / TM2
45	USB_VBUS
46	USB_D-
47	USB_D+
48	USB_V_{DD}33_CAP
49	VSS
50	LDO_CAP
51	V_{DD}
52	PC.14 / EBI_AD11 / SPI0_I2SMCLK / USCI0_CTL0 / TM1
53	PB.15 / ADC0_CH15 / EBI_AD12 / SPI0_SS / USCI0_CTL1 / UART0_nCTS / PWM1_CH0 / TM0_EXT / PWM0_BRAKE1
54	PB.14 / ADC0_CH14 / EBI_AD13 / SPI0_CLK / USCI0_DAT1 / UART0_nRTS / PWM1_CH1 / TM1_EXT / CLKO
55	PB.13 / ADC0_CH13 / ACMP0_P3 / ACMP1_P3 / EBI_AD14 / SPI0_MISO / USCI0_DAT0 / UART0_TXD / PWM1_CH2 / TM2_EXT
56	PB.12 / ADC0_CH12 / ACMP0_P2 / ACMP1_P2 / EBI_AD15 / SPI0_MOSI / USCI0_CLK / UART0_RXD / PWM1_CH3 / TM3_EXT
57	AV_{DD}
58	V_{REF}
59	AVSS
60	PB.11 / ADC0_CH11 / EBI_ADR16 / UART0_nCTS / I2C1_SCL / SPI0_I2SMCLK
61	PB.10 / ADC0_CH10 / EBI_ADR17 / UART0_nRTS / I2C1_SDA
62	PB.9 / ADC0_CH9 / EBI_ADR18 / UART0_TXD / UART1_nCTS
63	PB.8 / ADC0_CH8 / EBI_ADR19 / UART0_RXD / UART1_nRTS
64	PB.7 / ADC0_CH7 / EBI_nWRL / UART1_TXD / EBI_nCS0 / PWM1_BRAKE0 / PWM1_CH4 / INT5 / ACMP0_O

Table 5.1-31 M032SE2AE Multi-function Pin Table

M032SG6AE

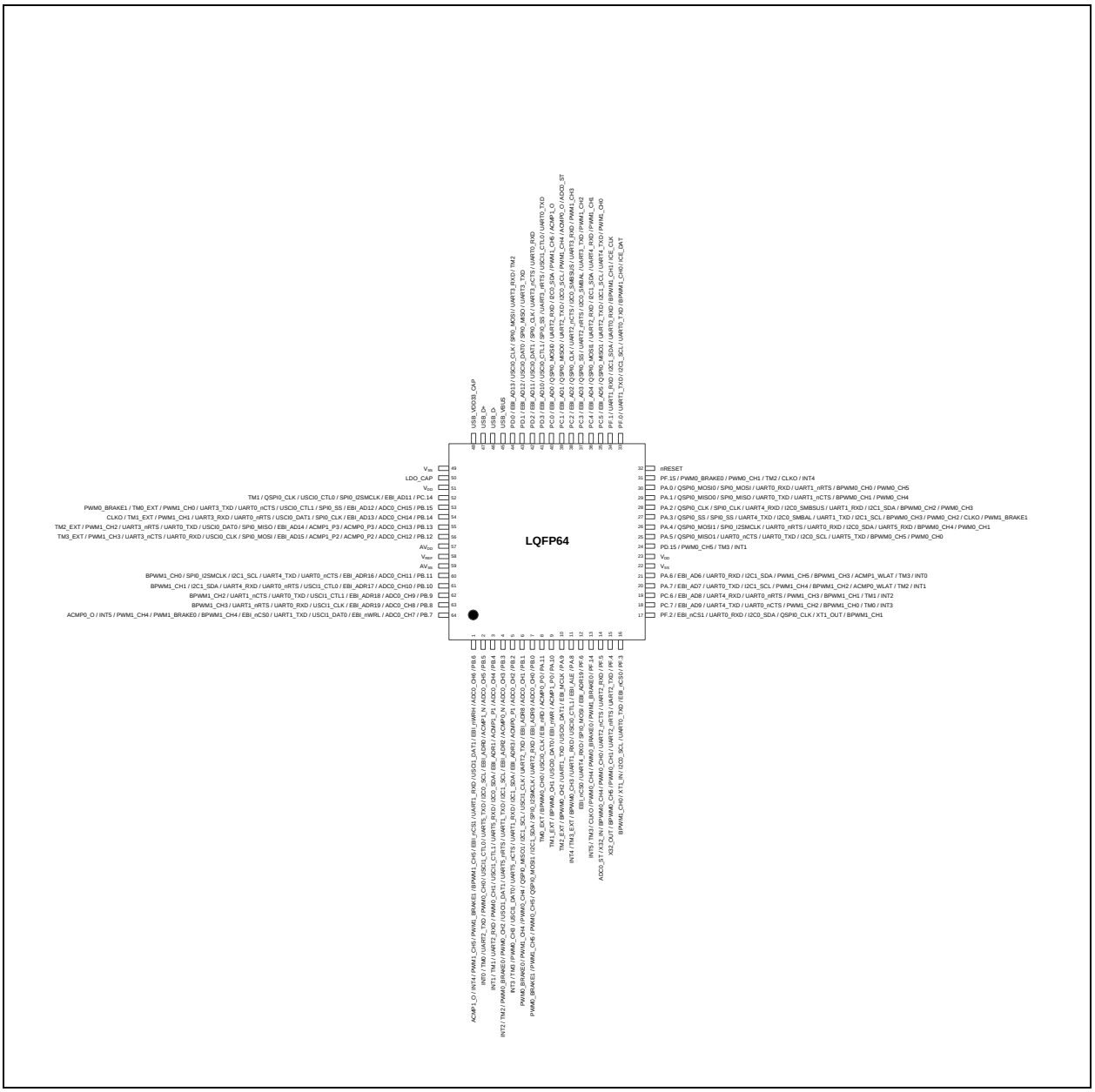

Figure 5.1-44 M032SG6AE Multi-function Pin Diagram

Pin	M032SG6AE Pin Function
1	PB.6 / ADC0_CH6 / EBI_nWRH / USCI1_DAT1 / UART1_RXD / EBI_nCS1 / BPWM1_CH5 / PWM1_BRAKE1 / PWM1_CH5 / INT4 / ACMP1_O
2	PB.5 / ADC0_CH5 / ACMP1_N / EBI_ADR0 / I2C0_SCL / UART5_TXD / USCI1_CTL0 / PWM0_CH0 / UART2_TXD / TM0 / INT0
3	PB.4 / ADC0_CH4 / ACMP1_P1 / EBI_ADR1 / I2C0_SDA / UART5_RXD / USCI1_CTL1 / PWM0_CH1 / UART2_RXD / TM1 / INT1

Pin	M032SG6AE Pin Function
4	PB.3 / ADC0_CH3 / ACMP0_N / EBI_ADR2 / I2C1_SCL / UART1_TXD / UART5_nRTS / USCI1_DAT1 / PWM0_CH2 / PWM0_BRAKE0 / TM2 / INT2
5	PB.2 / ADC0_CH2 / ACMP0_P1 / EBI_ADR3 / I2C1_SDA / UART1_RXD / UART5_nCTS / USCI1_DAT0 / PWM0_CH3 / TM3 / INT3
6	PB.1 / ADC0_CH1 / EBI_ADR8 / UART2_TXD / USCI1_CLK / I2C1_SCL / QSPI0_MISO1 / PWM0_CH4 / PWM1_CH4 / PWM0_BRAKE0
7	PB.0 / ADC0_CH0 / EBI_ADR9 / UART2_RXD / SPI0_I2SMCLK / I2C1_SDA / QSPI0_MOSI1 / PWM0_CH5 / PWM1_CH5 / PWM0_BRAKE1
8	PA.11 / ACMP0_P0 / EBI_nRD / USCI0_CLK / BPWM0_CH0 / TM0_EXT
9	PA.10 / ACMP1_P0 / EBI_nWR / USCI0_DAT0 / BPWM0_CH1 / TM1_EXT
10	PA.9 / EBI_MCLK / USCI0_DAT1 / UART1_TXD / BPWM0_CH2 / TM2_EXT
11	PA.8 / EBI_ALE / USCI0_CTL1 / UART1_RXD / BPWM0_CH3 / TM3_EXT / INT4
12	PF.6 / EBI_ADR19 / SPI0_MOSI / UART4_RXD / EBI_nCS0
13	PF.14 / PWM1_BRAKE0 / PWM0_BRAKE0 / PWM0_CH4 / CLKO / TM3 / INT5
14	PF.5 / UART2_RXD / UART2_nCTS / PWM0_CH0 / BPWM0_CH4 / X32_IN / ADC0_ST
15	PF.4 / UART2_TXD / UART2_nRTS / PWM0_CH1 / BPWM0_CH5 / X32_OUT
16	PF.3 / EBI_nCS0 / UART0_TXD / I2C0_SCL / XT1_IN / BPWM1_CH0
17	PF.2 / EBI_nCS1 / UART0_RXD / I2C0_SDA / QSPI0_CLK / XT1_OUT / BPWM1_CH1
18	PC.7 / EBI_AD9 / UART4_TXD / UART0_nCTS / PWM1_CH2 / BPWM1_CH0 / TM0 / INT3
19	PC.6 / EBI_AD8 / UART4_RXD / UART0_nRTS / PWM1_CH3 / BPWM1_CH1 / TM1 / INT2
20	PA.7 / EBI_AD7 / UART0_TXD / I2C1_SCL / PWM1_CH4 / BPWM1_CH2 / ACMP0_WLAT / TM2 / INT1
21	PA.6 / EBI_AD6 / UART0_RXD / I2C1_SDA / PWM1_CH5 / BPWM1_CH3 / ACMP1_WLAT / TM3 / INT0
22	VSS
23	V_{DD}
24	PD.15 / PWM0_CH5 / TM3 / INT1
25	PA.5 / QSPI0_MISO1 / UART0_nCTS / UART0_TXD / I2C0_SCL / UART5_TXD / BPWM0_CH5 / PWM0_CH0
26	PA.4 / QSPI0_MOSI1 / SPI0_I2SMCLK / UART0_nRTS / UART0_RXD / I2C0_SDA / UART5_RXD / BPWM0_CH4 / PWM0_CH1
27	PA.3 / QSPI0_SS / SPI0_SS / UART4_TXD / I2C0_SMBAL / UART1_TXD / I2C1_SCL / BPWM0_CH3 / PWM0_CH2 / CLKO / PWM1_BRAKE1
28	PA.2 / QSPI0_CLK / SPI0_CLK / UART4_RXD / I2C0_SMBSUS / UART1_RXD / I2C1_SDA / BPWM0_CH2 / PWM0_CH3
29	PA.1 / QSPI0_MISO0 / SPI0_MISO / UART0_TXD / UART1_nCTS / BPWM0_CH1 / PWM0_CH4
30	PA.0 / QSPI0_MOSI0 / SPI0_MOSI / UART0_RXD / UART1_nRTS / BPWM0_CH0 / PWM0_CH5
31	PF.15 / PWM0_BRAKE0 / PWM0_CH1 / TM2 / CLKO / INT4
32	nRESET
33	PF.0 / UART1_TXD / I2C1_SCL / UART0_TXD / BPWM1_CH0 / ICE_DAT

Pin	M032SG6AE Pin Function
34	PF.1 / UART1_RXD / I2C1_SDA / UART0_RXD / BPWM1_CH1 / ICE_CLK
35	PC.5 / EBI_AD5 / QSPI0_MISO1 / UART2_TXD / I2C1_SCL / UART4_TXD / PWM1_CH0
36	PC.4 / EBI_AD4 / QSPI0_MOSI1 / UART2_RXD / I2C1_SDA / UART4_RXD / PWM1_CH1
37	PC.3 / EBI_AD3 / QSPI0_SS / UART2_nRTS / I2C0_SMBAL / UART3_TXD / PWM1_CH2
38	PC.2 / EBI_AD2 / QSPI0_CLK / UART2_nCTS / I2C0_SMBSUS / UART3_RXD / PWM1_CH3
39	PC.1 / EBI_AD1 / QSPI0_MISO0 / UART2_TXD / I2C0_SCL / PWM1_CH4 / ACMP0_O / ADC0_ST
40	PC.0 / EBI_AD0 / QSPI0_MOSI0 / UART2_RXD / I2C0_SDA / PWM1_CH5 / ACMP1_O
41	PD.3 / EBI_AD10 / USCI0_CTL1 / SPI0_SS / UART3_nRTS / USCI1_CTL0 / UART0_TXD
42	PD.2 / EBI_AD11 / USCI0_DAT1 / SPI0_CLK / UART3_nCTS / UART0_RXD
43	PD.1 / EBI_AD12 / USCI0_DAT0 / SPI0_MISO / UART3_TXD
44	PD.0 / EBI_AD13 / USCI0_CLK / SPI0_MOSI / UART3_RXD / TM2
45	USB_VBUS
46	USB_D-
47	USB_D+
48	USB_V_{DD}33_CAP
49	VSS
50	LDO_CAP
51	V_{DD}
52	PC.14 / EBI_AD11 / SPI0_I2SMCLK / USCI0_CTL0 / QSPI0_CLK / TM1
53	PB.15 / ADC0_CH15 / EBI_AD12 / SPI0_SS / USCI0_CTL1 / UART0_nCTS / UART3_TXD / PWM1_CH0 / TM0_EXT / PWM0_BRAKE1
54	PB.14 / ADC0_CH14 / EBI_AD13 / SPI0_CLK / USCI0_DAT1 / UART0_nRTS / UART3_RXD / PWM1_CH1 / TM1_EXT / CLKO
55	PB.13 / ADC0_CH13 / ACMP0_P3 / ACMP1_P3 / EBI_AD14 / SPI0_MISO / USCI0_DAT0 / UART0_TXD / UART3_nRTS / PWM1_CH2 / TM2_EXT
56	PB.12 / ADC0_CH12 / ACMP0_P2 / ACMP1_P2 / EBI_AD15 / SPI0_MOSI / USCI0_CLK / UART0_RXD / UART3_nCTS / PWM1_CH3 / TM3_EXT
57	AV_{DD}
58	V_{REF}
59	AVSS
60	PB.11 / ADC0_CH11 / EBI_ADR16 / UART0_nCTS / UART4_TXD / I2C1_SCL / SPI0_I2SMCLK / BPWM1_CH0
61	PB.10 / ADC0_CH10 / EBI_ADR17 / USCI1_CTL0 / UART0_nRTS / UART4_RXD / I2C1_SDA / BPWM1_CH1
62	PB.9 / ADC0_CH9 / EBI_ADR18 / USCI1_CTL1 / UART0_TXD / UART1_nCTS / BPWM1_CH2
63	PB.8 / ADC0_CH8 / EBI_ADR19 / USCI1_CLK / UART0_RXD / UART1_nRTS / BPWM1_CH3
64	PB.7 / ADC0_CH7 / EBI_nWRL / USCI1_DAT0 / UART1_TXD / EBI_nCS0 / BPWM1_CH4 / PWM1_BRAKE0 / PWM1_CH4 / INT5 / ACMP0_O

Table 5.1-32 M032SG6AE Multi-function Pin Table

M032SG8AE

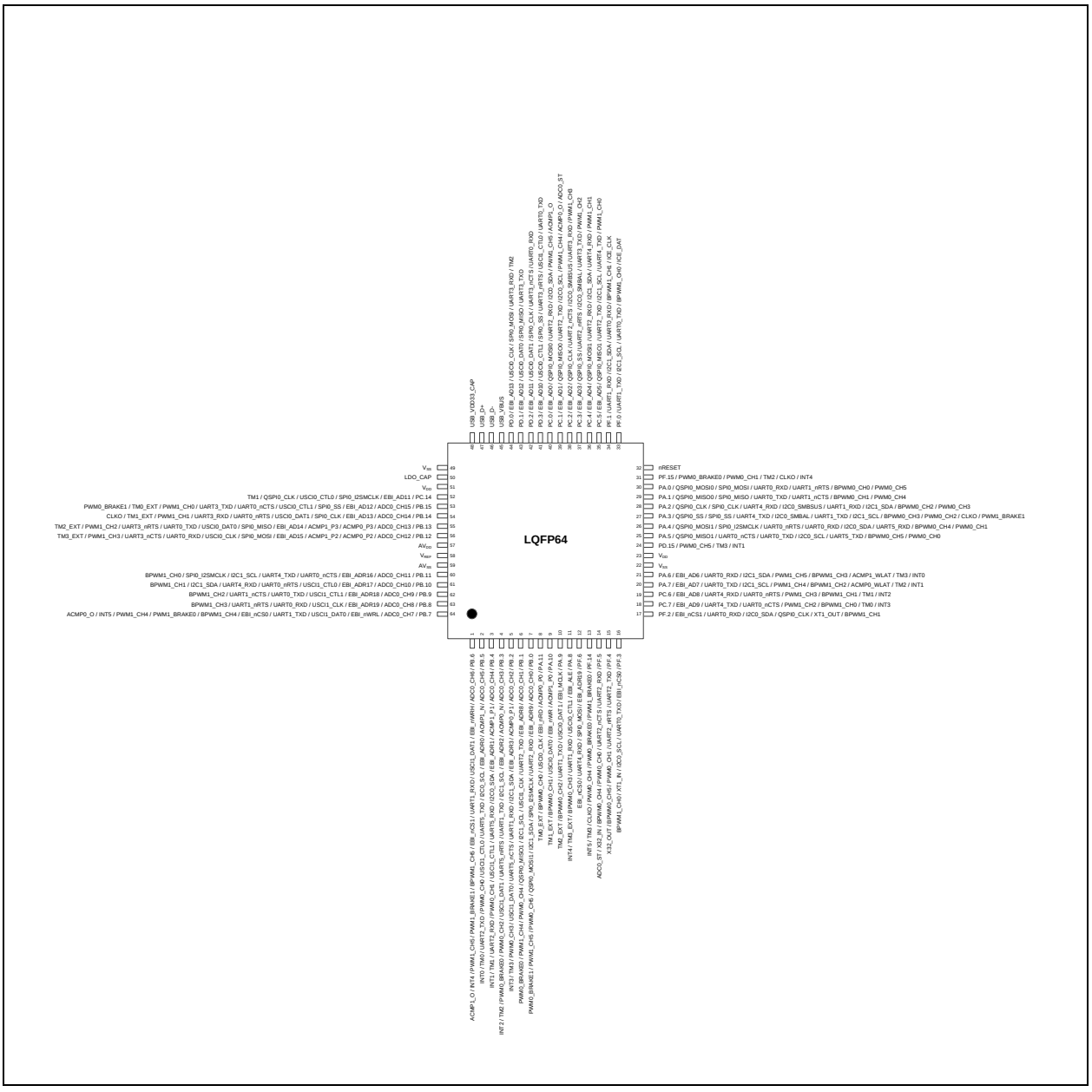

Figure 5.1-45 M032SG8AE Multi-function Pin Diagram

Pin	M032SG8AE Pin Function
1	PB.6 / ADC0_CH6 / EBI_nWRH / USCI1_DAT1 / UART1_RXD / EBI_nCS1 / BPWM1_CH5 / PWM1_BRAKE1 / PWM1_CH5 / INT4 / ACMP1_O
2	PB.5 / ADC0_CH5 / ACMP1_N / EBI_ADR0 / I2C0_SCL / UART5_TXD / USCI1_CTL0 / PWM0_CH0 / UART2_TXD / TM0 / INT0

Pin	M032SG8AE Pin Function
3	PB.4 / ADC0_CH4 / ACMP1_P1 / EBI_ADR1 / I2C0_SDA / UART5_RXD / USCI1_CTL1 / PWM0_CH1 / UART2_RXD / TM1 / INT1
4	PB.3 / ADC0_CH3 / ACMP0_N / EBI_ADR2 / I2C1_SCL / UART1_TXD / UART5_nRTS / USCI1_DAT1 / PWM0_CH2 / PWM0_BRAKE0 / TM2 / INT2
5	PB.2 / ADC0_CH2 / ACMP0_P1 / EBI_ADR3 / I2C1_SDA / UART1_RXD / UART5_nCTS / USCI1_DAT0 / PWM0_CH3 / TM3 / INT3
6	PB.1 / ADC0_CH1 / EBI_ADR8 / UART2_TXD / USCI1_CLK / I2C1_SCL / QSPI0_MISO1 / PWM0_CH4 / PWM1_CH4 / PWM0_BRAKE0
7	PB.0 / ADC0_CH0 / EBI_ADR9 / UART2_RXD / SPI0_I2SMCLK / I2C1_SDA / QSPI0_MOSI1 / PWM0_CH5 / PWM1_CH5 / PWM0_BRAKE1
8	PA.11 / ACMP0_P0 / EBI_nRD / USCI0_CLK / BPWM0_CH0 / TM0_EXT
9	PA.10 / ACMP1_P0 / EBI_nWR / USCI0_DAT0 / BPWM0_CH1 / TM1_EXT
10	PA.9 / EBI_MCLK / USCI0_DAT1 / UART1_TXD / BPWM0_CH2 / TM2_EXT
11	PA.8 / EBI_ALE / USCI0_CTL1 / UART1_RXD / BPWM0_CH3 / TM3_EXT / INT4
12	PF.6 / EBI_ADR19 / SPI0_MOSI / UART4_RXD / EBI_nCS0
13	PF.14 / PWM1_BRAKE0 / PWM0_BRAKE0 / PWM0_CH4 / CLKO / TM3 / INT5
14	PF.5 / UART2_RXD / UART2_nCTS / PWM0_CH0 / BPWM0_CH4 / X32_IN / ADC0_ST
15	PF.4 / UART2_TXD / UART2_nRTS / PWM0_CH1 / BPWM0_CH5 / X32_OUT
16	PF.3 / EBI_nCS0 / UART0_TXD / I2C0_SCL / XT1_IN / BPWM1_CH0
17	PF.2 / EBI_nCS1 / UART0_RXD / I2C0_SDA / QSPI0_CLK / XT1_OUT / BPWM1_CH1
18	PC.7 / EBI_AD9 / UART4_TXD / UART0_nCTS / PWM1_CH2 / BPWM1_CH0 / TM0 / INT3
19	PC.6 / EBI_AD8 / UART4_RXD / UART0_nRTS / PWM1_CH3 / BPWM1_CH1 / TM1 / INT2
20	PA.7 / EBI_AD7 / UART0_TXD / I2C1_SCL / PWM1_CH4 / BPWM1_CH2 / ACMP0_WLAT / TM2 / INT1
21	PA.6 / EBI_AD6 / UART0_RXD / I2C1_SDA / PWM1_CH5 / BPWM1_CH3 / ACMP1_WLAT / TM3 / INT0
22	VSS
23	V_{DD}
24	PD.15 / PWM0_CH5 / TM3 / INT1
25	PA.5 / QSPI0_MISO1 / UART0_nCTS / UART0_TXD / I2C0_SCL / UART5_TXD / BPWM0_CH5 / PWM0_CH0
26	PA.4 / QSPI0_MOSI1 / SPI0_I2SMCLK / UART0_nRTS / UART0_RXD / I2C0_SDA / UART5_RXD / BPWM0_CH4 / PWM0_CH1
27	PA.3 / QSPI0_SS / SPI0_SS / UART4_TXD / I2C0_SMBAL / UART1_TXD / I2C1_SCL / BPWM0_CH3 / PWM0_CH2 / CLKO / PWM1_BRAKE1
28	PA.2 / QSPI0_CLK / SPI0_CLK / UART4_RXD / I2C0_SMBSUS / UART1_RXD / I2C1_SDA / BPWM0_CH2 / PWM0_CH3
29	PA.1 / QSPI0_MISO0 / SPI0_MISO / UART0_TXD / UART1_nCTS / BPWM0_CH1 / PWM0_CH4
30	PA.0 / QSPI0_MOSI0 / SPI0_MOSI / UART0_RXD / UART1_nRTS / BPWM0_CH0 / PWM0_CH5
31	PF.15 / PWM0_BRAKE0 / PWM0_CH1 / TM2 / CLKO / INT4

Pin	M032SG8AE Pin Function
32	nRESET
33	PF.0 / UART1_TXD / I2C1_SCL / UART0_TXD / BPWM1_CH0 / ICE_DAT
34	PF.1 / UART1_RXD / I2C1_SDA / UART0_RXD / BPWM1_CH1 / ICE_CLK
35	PC.5 / EBI_AD5 / QSPI0_MISO1 / UART2_TXD / I2C1_SCL / UART4_TXD / PWM1_CH0
36	PC.4 / EBI_AD4 / QSPI0_MOSI1 / UART2_RXD / I2C1_SDA / UART4_RXD / PWM1_CH1
37	PC.3 / EBI_AD3 / QSPI0_SS / UART2_nRTS / I2C0_SMBAL / UART3_TXD / PWM1_CH2
38	PC.2 / EBI_AD2 / QSPI0_CLK / UART2_nCTS / I2C0_SMBSUS / UART3_RXD / PWM1_CH3
39	PC.1 / EBI_AD1 / QSPI0_MISO0 / UART2_TXD / I2C0_SCL / PWM1_CH4 / ACMP0_O / ADC0_ST
40	PC.0 / EBI_AD0 / QSPI0_MOSI0 / UART2_RXD / I2C0_SDA / PWM1_CH5 / ACMP1_O
41	PD.3 / EBI_AD10 / USCI0_CTL1 / SPI0_SS / UART3_nRTS / USCI1_CTL0 / UART0_TXD
42	PD.2 / EBI_AD11 / USCI0_DAT1 / SPI0_CLK / UART3_nCTS / UART0_RXD
43	PD.1 / EBI_AD12 / USCI0_DAT0 / SPI0_MISO / UART3_TXD
44	PD.0 / EBI_AD13 / USCI0_CLK / SPI0_MOSI / UART3_RXD / TM2
45	USB_VBUS
46	USB_D-
47	USB_D+
48	USB_V_{DD}33_CAP
49	VSS
50	LDO_CAP
51	V_{DD}
52	PC.14 / EBI_AD11 / SPI0_I2SMCLK / USCI0_CTL0 / QSPI0_CLK / TM1
53	PB.15 / ADC0_CH15 / EBI_AD12 / SPI0_SS / USCI0_CTL1 / UART0_nCTS / UART3_TXD / PWM1_CH0 / TM0_EXT / PWM0_BRAKE1
54	PB.14 / ADC0_CH14 / EBI_AD13 / SPI0_CLK / USCI0_DAT1 / UART0_nRTS / UART3_RXD / PWM1_CH1 / TM1_EXT / CLKO
55	PB.13 / ADC0_CH13 / ACMP0_P3 / ACMP1_P3 / EBI_AD14 / SPI0_MISO / USCI0_DAT0 / UART0_TXD / UART3_nRTS / PWM1_CH2 / TM2_EXT
56	PB.12 / ADC0_CH12 / ACMP0_P2 / ACMP1_P2 / EBI_AD15 / SPI0_MOSI / USCI0_CLK / UART0_RXD / UART3_nCTS / PWM1_CH3 / TM3_EXT
57	AV_{DD}
58	V_{REF}
59	AVSS
60	PB.11 / ADC0_CH11 / EBI_ADR16 / UART0_nCTS / UART4_TXD / I2C1_SCL / SPI0_I2SMCLK / BPWM1_CH0
61	PB.10 / ADC0_CH10 / EBI_ADR17 / USCI1_CTL0 / UART0_nRTS / UART4_RXD / I2C1_SDA / BPWM1_CH1
62	PB.9 / ADC0_CH9 / EBI_ADR18 / USCI1_CTL1 / UART0_TXD / UART1_nCTS / BPWM1_CH2

Pin	M032SG8AE Pin Function
63	PB.8 / ADC0_CH8 / EBI_ADR19 / USCI1_CLK / UART0_RXD / UART1_nRTS / BPWM1_CH3
64	PB.7 / ADC0_CH7 / EBI_nWRL / USCI1_DAT0 / UART1_TXD / EBI_nCS0 / BPWM1_CH4 / PWM1_BRAKE0 / PWM1_CH4 / INT5 / ACMP0_O

Table 5.1-33 M032SG8AE Multi-function Pin Table

M032SIAAE

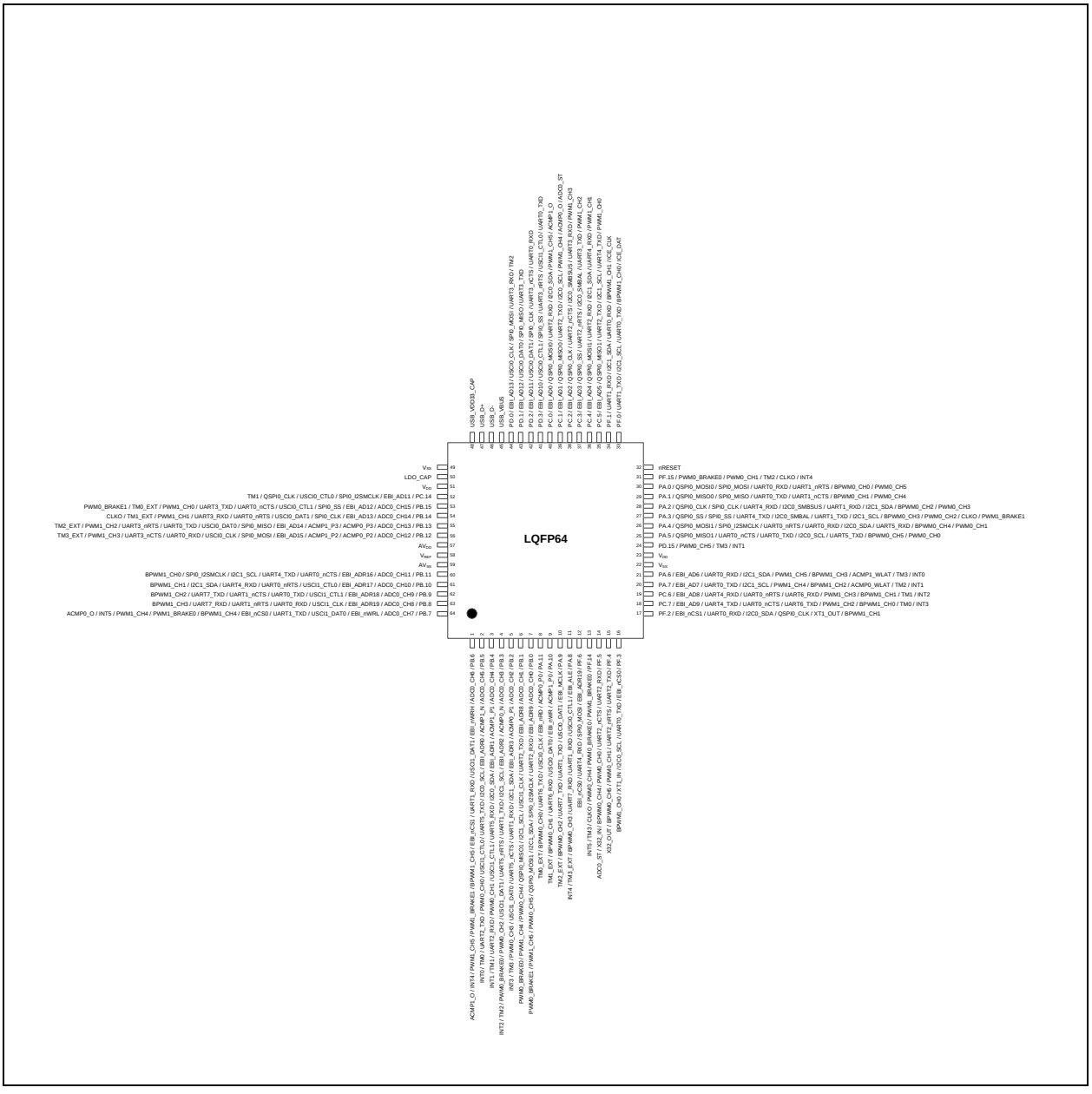

Figure 5.1-46 M032SIAAE Multi-function Pin Diagram

Pin	M032SIAAE Pin Function
1	PB.6 / ADC0_CH6 / EBI_nWRH / USCI1_DAT1 / UART1_RXD / EBI_nCS1 / BPWM1_CH5 / PWM1_BRAKE1 / PWM1_CH5 / INT4 / ACMP1_O
2	PB.5 / ADC0_CH5 / ACMP1_N / EBI_ADR0 / I2C0_SCL / UART5_TXD / USCI1_CTL0 / PWM0_CH0 / UART2_TXD / TM0 / INT0
3	PB.4 / ADC0_CH4 / ACMP1_P1 / EBI_ADR1 / I2C0_SDA / UART5_RXD / USCI1_CTL1 / PWM0_CH1 / UART2_RXD / TM1 / INT1
4	PB.3 / ADC0_CH3 / ACMP0_N / EBI_ADR2 / I2C1_SCL / UART1_TXD / UART5_nRTS / USCI1_DAT1 / PWM0_CH2 / PWM0_BRAKE0 / TM2 / INT2
5	PB.2 / ADC0_CH2 / ACMP0_P1 / EBI_ADR3 / I2C1_SDA / UART1_RXD / UART5_nCTS / USCI1_DAT0 / PWM0_CH3 / TM3 / INT3
6	PB.1 / ADC0_CH1 / EBI_ADR8 / UART2_TXD / USCI1_CLK / I2C1_SCL / QSPI0_MISO1 / PWM0_CH4 / PWM1_CH4 / PWM0_BRAKE0
7	PB.0 / ADC0_CH0 / EBI_ADR9 / UART2_RXD / SPI0_I2SMCLK / I2C1_SDA / QSPI0_MOSI1 / PWM0_CH5 / PWM1_CH5 / PWM0_BRAKE1
8	PA.11 / ACMP0_P0 / EBI_nRD / USCI0_CLK / UART6_TXD / BPWM0_CH0 / TM0_EXT
9	PA.10 / ACMP1_P0 / EBI_nWR / USCI0_DAT0 / UART6_RXD / BPWM0_CH1 / TM1_EXT
10	PA.9 / EBI_MCLK / USCI0_DAT1 / UART1_TXD / UART7_TXD / BPWM0_CH2 / TM2_EXT
11	PA.8 / EBI_ALE / USCI0_CTL1 / UART1_RXD / UART7_RXD / BPWM0_CH3 / TM3_EXT / INT4
12	PF.6 / EBI_ADR19 / SPI0_MOSI / UART4_RXD / EBI_nCS0
13	PF.14 / PWM1_BRAKE0 / PWM0_BRAKE0 / PWM0_CH4 / CLKO / TM3 / INT5
14	PF.5 / UART2_RXD / UART2_nCTS / PWM0_CH0 / BPWM0_CH4 / X32_IN / ADC0_ST
15	PF.4 / UART2_TXD / UART2_nRTS / PWM0_CH1 / BPWM0_CH5 / X32_OUT
16	PF.3 / EBI_nCS0 / UART0_TXD / I2C0_SCL / XT1_IN / BPWM1_CH0
17	PF.2 / EBI_nCS1 / UART0_RXD / I2C0_SDA / QSPI0_CLK / XT1_OUT / BPWM1_CH1
18	PC.7 / EBI_AD9 / UART4_TXD / UART0_nCTS / UART6_TXD / PWM1_CH2 / BPWM1_CH0 / TM0 / INT3
19	PC.6 / EBI_AD8 / UART4_RXD / UART0_nRTS / UART6_RXD / PWM1_CH3 / BPWM1_CH1 / TM1 / INT2
20	PA.7 / EBI_AD7 / UART0_TXD / I2C1_SCL / PWM1_CH4 / BPWM1_CH2 / ACMP0_WLAT / TM2 / INT1
21	PA.6 / EBI_AD6 / UART0_RXD / I2C1_SDA / PWM1_CH5 / BPWM1_CH3 / ACMP1_WLAT / TM3 / INT0
22	VSS
23	V_{DD}
24	PD.15 / PWM0_CH5 / TM3 / INT1
25	PA.5 / QSPI0_MISO1 / UART0_nCTS / UART0_TXD / I2C0_SCL / UART5_TXD / BPWM0_CH5 / PWM0_CH0
26	PA.4 / QSPI0_MOSI1 / SPI0_I2SMCLK / UART0_nRTS / UART0_RXD / I2C0_SDA / UART5_RXD / BPWM0_CH4 / PWM0_CH1
27	PA.3 / QSPI0_SS / SPI0_SS / UART4_TXD / I2C0_SMBAL / UART1_TXD / I2C1_SCL / BPWM0_CH3 / PWM0_CH2 / CLKO / PWM1_BRAKE1
28	PA.2 / QSPI0_CLK / SPI0_CLK / UART4_RXD / I2C0_SMBSUS / UART1_RXD / I2C1_SDA / BPWM0_CH2 / PWM0_CH3

Pin	M032SIAAE Pin Function
29	PA.1 / QSPI0_MISO0 / SPI0_MISO / UART0_TXD / UART1_nCTS / BPWM0_CH1 / PWM0_CH4
30	PA.0 / QSPI0_MOSI0 / SPI0_MOSI / UART0_RXD / UART1_nRTS / BPWM0_CH0 / PWM0_CH5
31	PF.15 / PWM0_BRAKE0 / PWM0_CH1 / TM2 / CLKO / INT4
32	nRESET
33	PF.0 / UART1_TXD / I2C1_SCL / UART0_TXD / BPWM1_CH0 / ICE_DAT
34	PF.1 / UART1_RXD / I2C1_SDA / UART0_RXD / BPWM1_CH1 / ICE_CLK
35	PC.5 / EBI_AD5 / QSPI0_MISO1 / UART2_TXD / I2C1_SCL / UART4_TXD / PWM1_CH0
36	PC.4 / EBI_AD4 / QSPI0_MOSI1 / UART2_RXD / I2C1_SDA / UART4_RXD / PWM1_CH1
37	PC.3 / EBI_AD3 / QSPI0_SS / UART2_nRTS / I2C0_SMBAL / UART3_TXD / PWM1_CH2
38	PC.2 / EBI_AD2 / QSPI0_CLK / UART2_nCTS / I2C0_SMBSUS / UART3_RXD / PWM1_CH3
39	PC.1 / EBI_AD1 / QSPI0_MISO0 / UART2_TXD / I2C0_SCL / PWM1_CH4 / ACMP0_O / ADC0_ST
40	PC.0 / EBI_AD0 / QSPI0_MOSI0 / UART2_RXD / I2C0_SDA / PWM1_CH5 / ACMP1_O
41	PD.3 / EBI_AD10 / USCI0_CTL1 / SPI0_SS / UART3_nRTS / USCI1_CTL0 / UART0_TXD
42	PD.2 / EBI_AD11 / USCI0_DAT1 / SPI0_CLK / UART3_nCTS / UART0_RXD
43	PD.1 / EBI_AD12 / USCI0_DAT0 / SPI0_MISO / UART3_TXD
44	PD.0 / EBI_AD13 / USCI0_CLK / SPI0_MOSI / UART3_RXD / TM2
45	USB_VBUS
46	USB_D-
47	USB_D+
48	USB_V_{DD}33_CAP
49	VSS
50	LDO_CAP
51	V_{DD}
52	PC.14 / EBI_AD11 / SPI0_I2SMCLK / USCI0_CTL0 / QSPI0_CLK / TM1
53	PB.15 / ADC0_CH15 / EBI_AD12 / SPI0_SS / USCI0_CTL1 / UART0_nCTS / UART3_TXD / PWM1_CH0 / TM0_EXT / PWM0_BRAKE1
54	PB.14 / ADC0_CH14 / EBI_AD13 / SPI0_CLK / USCI0_DAT1 / UART0_nRTS / UART3_RXD / PWM1_CH1 / TM1_EXT / CLKO
55	PB.13 / ADC0_CH13 / ACMP0_P3 / ACMP1_P3 / EBI_AD14 / SPI0_MISO / USCI0_DAT0 / UART0_TXD / UART3_nRTS / PWM1_CH2 / TM2_EXT
56	PB.12 / ADC0_CH12 / ACMP0_P2 / ACMP1_P2 / EBI_AD15 / SPI0_MOSI / USCI0_CLK / UART0_RXD / UART3_nCTS / PWM1_CH3 / TM3_EXT
57	AV_{DD}
58	V_{REF}
59	AVSS

Pin	M032SIAAE Pin Function
60	PB.11 / ADC0_CH11 / EBI_ADR16 / UART0_nCTS / UART4_TXD / I2C1_SCL / SPI0_I2SMCLK / BPWM1_CH0
61	PB.10 / ADC0_CH10 / EBI_ADR17 / USCI1_CTL0 / UART0_nRTS / UART4_RXD / I2C1_SDA / BPWM1_CH1
62	PB.9 / ADC0_CH9 / EBI_ADR18 / USCI1_CTL1 / UART0_TXD / UART1_nCTS / UART7_TXD / BPWM1_CH2
63	PB.8 / ADC0_CH8 / EBI_ADR19 / USCI1_CLK / UART0_RXD / UART1_nRTS / UART7_RXD / BPWM1_CH3
64	PB.7 / ADC0_CH7 / EBI_nWRL / USCI1_DAT0 / UART1_TXD / EBI_nCS0 / BPWM1_CH4 / PWM1_BRAKE0 / PWM1_CH4 / INT5 / ACMP0_O

Table 5.1-34 M032SIAAE Multi-function Pin Table

5.1.4.6 M032 Series LQFP 128-Pin Multi-function Pin Diagram

Corresponding Part Number: M032KG6AE, M032KG8AE, M032KIAAE

M032KG6AE

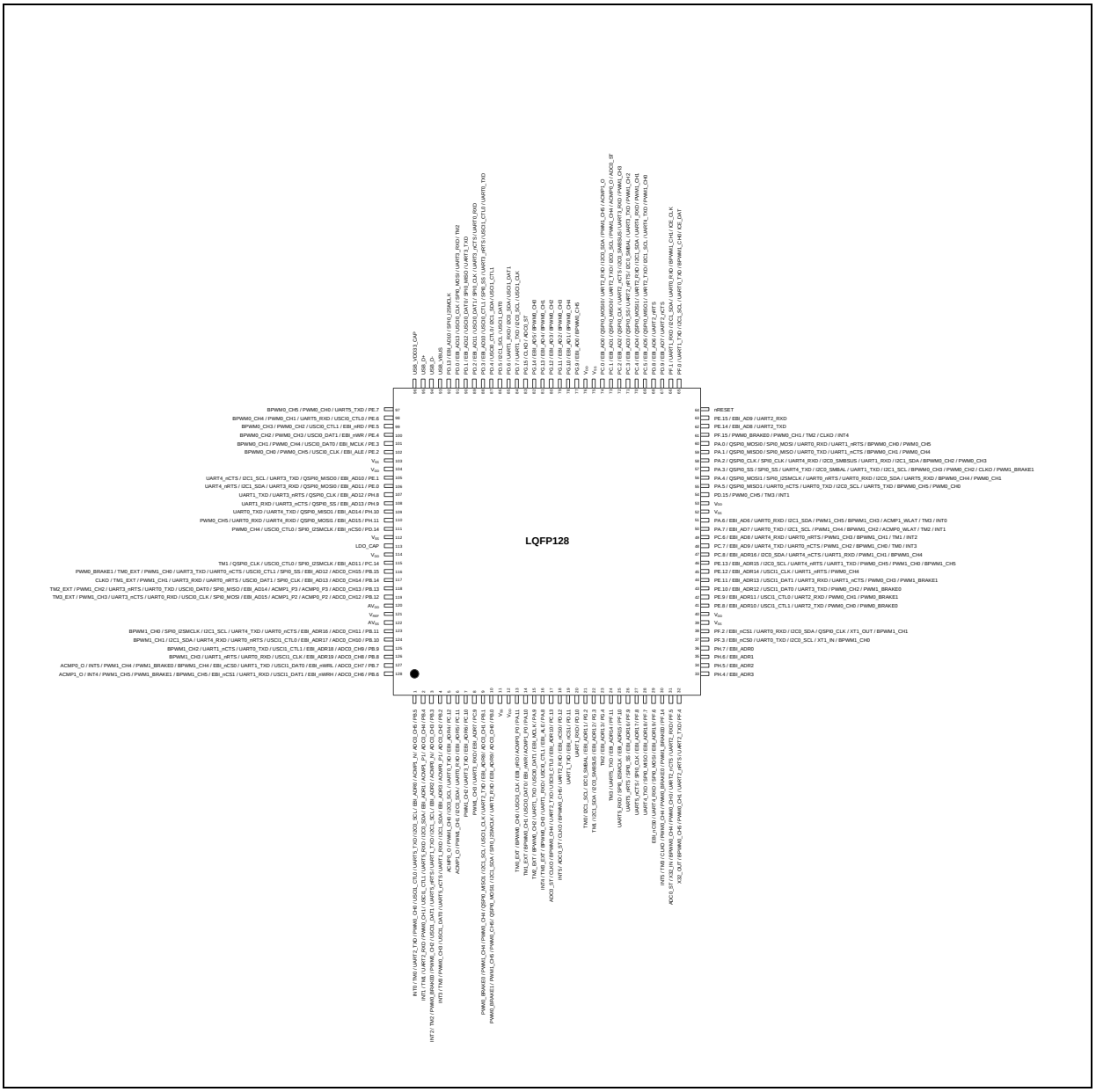

Figure 5.1-47 M032KG6AE Multi-function Pin Diagram

Pin	M032KG6AE Pin Function
1	PB.5 / ADC0_CH5 / ACMP1_N / EBI_ADR0 / I2C0_SCL / UART5_TXD / USCI1_CTL0 / PWM0_CH0 / UART2_TXD / TM0 / INT0
2	PB.4 / ADC0_CH4 / ACMP1_P1 / EBI_ADR1 / I2C0_SDA / UART5_RXD / USCI1_CTL1 / PWM0_CH1 / UART2_RXD / TM1 / INT1

Pin	M032KG6AE Pin Function
3	PB.3 / ADC0_CH3 / ACMP0_N / EBI_ADR2 / I2C1_SCL / UART1_TXD / UART5_nRTS / USCI1_DAT1 / PWM0_CH2 / PWM0_BRAKE0 / TM2 / INT2
4	PB.2 / ADC0_CH2 / ACMP0_P1 / EBI_ADR3 / I2C1_SDA / UART1_RXD / UART5_nCTS / USCI1_DAT0 / PWM0_CH3 / TM3 / INT3
5	PC.12 / EBI_ADR4 / UART0_TXD / I2C0_SCL / PWM1_CH0 / ACMP0_O
6	PC.11 / EBI_ADR5 / UART0_RXD / I2C0_SDA / PWM1_CH1 / ACMP1_O
7	PC.10 / EBI_ADR6 / UART3_TXD / PWM1_CH2
8	PC.9 / EBI_ADR7 / UART3_RXD / PWM1_CH3
9	PB.1 / ADC0_CH1 / EBI_ADR8 / UART2_TXD / USCI1_CLK / I2C1_SCL / QSPI0_MISO1 / PWM0_CH4 / PWM1_CH4 / PWM0_BRAKE0
10	PB.0 / ADC0_CH0 / EBI_ADR9 / UART2_RXD / SPI0_I2SMCLK / I2C1_SDA / QSPI0_MOSI1 / PWM0_CH5 / PWM1_CH5 / PWM0_BRAKE1
11	VSS
12	V_{DD}
13	PA.11 / ACMP0_P0 / EBI_nRD / USCI0_CLK / BPWM0_CH0 / TM0_EXT
14	PA.10 / ACMP1_P0 / EBI_nWR / USCI0_DAT0 / BPWM0_CH1 / TM1_EXT
15	PA.9 / EBI_MCLK / USCI0_DAT1 / UART1_TXD / BPWM0_CH2 / TM2_EXT
16	PA.8 / EBI_ALE / USCI0_CTL1 / UART1_RXD / BPWM0_CH3 / TM3_EXT / INT4
17	PC.13 / EBI_ADR10 / USCI0_CTL0 / UART2_TXD / BPWM0_CH4 / CLKO / ADC0_ST
18	PD.12 / EBI_nCS0 / UART2_RXD / BPWM0_CH5 / CLKO / ADC0_ST / INT5
19	PD.11 / EBI_nCS1 / UART1_TXD
20	PD.10 / UART1_RXD
21	PG.2 / EBI_ADR11 / I2C0_SMBAL / I2C1_SCL / TM0
22	PG.3 / EBI_ADR12 / I2C0_SMBSUS / I2C1_SDA / TM1
23	PG.4 / EBI_ADR13 / TM2
24	PF.11 / EBI_ADR14 / UART5_TXD / TM3
25	PF.10 / EBI_ADR15 / SPI0_I2SMCLK / UART5_RXD
26	PF.9 / EBI_ADR16 / SPI0_SS / UART5_nRTS
27	PF.8 / EBI_ADR17 / SPI0_CLK / UART5_nCTS
28	PF.7 / EBI_ADR18 / SPI0_MISO / UART4_TXD
29	PF.6 / EBI_ADR19 / SPI0_MOSI / UART4_RXD / EBI_nCS0
30	PF.14 / PWM1_BRAKE0 / PWM0_BRAKE0 / PWM0_CH4 / CLKO / TM3 / INT5
31	PF.5 / UART2_RXD / UART2_nCTS / PWM0_CH0 / BPWM0_CH4 / X32_IN / ADC0_ST
32	PF.4 / UART2_TXD / UART2_nRTS / PWM0_CH1 / BPWM0_CH5 / X32_OUT
33	PH.4 / EBI_ADR3

Pin	M032KG6AE Pin Function
34	PH.5 / EBI_ADR2
35	PH.6 / EBI_ADR1
36	PH.7 / EBI_ADR0
37	PF.3 / EBI_nCS0 / UART0_TXD / I2C0_SCL / XT1_IN / BPWM1_CH0
38	PF.2 / EBI_nCS1 / UART0_RXD / I2C0_SDA / QSPI0_CLK / XT1_OUT / BPWM1_CH1
39	VSS
40	V_{DD}
41	PE.8 / EBI_ADR10 / USCI1_CTL1 / UART2_TXD / PWM0_CH0 / PWM0_BRAKE0
42	PE.9 / EBI_ADR11 / USCI1_CTL0 / UART2_RXD / PWM0_CH1 / PWM0_BRAKE1
43	PE.10 / EBI_ADR12 / USCI1_DAT0 / UART3_TXD / PWM0_CH2 / PWM1_BRAKE0
44	PE.11 / EBI_ADR13 / USCI1_DAT1 / UART3_RXD / UART1_nCTS / PWM0_CH3 / PWM1_BRAKE1
45	PE.12 / EBI_ADR14 / USCI1_CLK / UART1_nRTS / PWM0_CH4
46	PE.13 / EBI_ADR15 / I2C0_SCL / UART4_nRTS / UART1_TXD / PWM0_CH5 / PWM1_CH0 / BPWM1_CH5
47	PC.8 / EBI_ADR16 / I2C0_SDA / UART4_nCTS / UART1_RXD / PWM1_CH1 / BPWM1_CH4
48	PC.7 / EBI_AD9 / UART4_TXD / UART0_nCTS / PWM1_CH2 / BPWM1_CH0 / TM0 / INT3
49	PC.6 / EBI_AD8 / UART4_RXD / UART0_nRTS / PWM1_CH3 / BPWM1_CH1 / TM1 / INT2
50	PA.7 / EBI_AD7 / UART0_TXD / I2C1_SCL / PWM1_CH4 / BPWM1_CH2 / ACMP0_WLAT / TM2 / INT1
51	PA.6 / EBI_AD6 / UART0_RXD / I2C1_SDA / PWM1_CH5 / BPWM1_CH3 / ACMP1_WLAT / TM3 / INT0
52	VSS
53	V_{DD}
54	PD.15 / PWM0_CH5 / TM3 / INT1
55	PA.5 / QSPI0_MISO1 / UART0_nCTS / UART0_TXD / I2C0_SCL / UART5_TXD / BPWM0_CH5 / PWM0_CH0
56	PA.4 / QSPI0_MOSI1 / SPI0_I2SMCLK / UART0_nRTS / UART0_RXD / I2C0_SDA / UART5_RXD / BPWM0_CH4 / PWM0_CH1
57	PA.3 / QSPI0_SS / SPI0_SS / UART4_TXD / I2C0_SMBAL / UART1_TXD / I2C1_SCL / BPWM0_CH3 / PWM0_CH2 / CLKO / PWM1_BRAKE1
58	PA.2 / QSPI0_CLK / SPI0_CLK / UART4_RXD / I2C0_SMBSUS / UART1_RXD / I2C1_SDA / BPWM0_CH2 / PWM0_CH3
59	PA.1 / QSPI0_MISO0 / SPI0_MISO / UART0_TXD / UART1_nCTS / BPWM0_CH1 / PWM0_CH4
60	PA.0 / QSPI0_MOSI0 / SPI0_MOSI / UART0_RXD / UART1_nRTS / BPWM0_CH0 / PWM0_CH5
61	PF.15 / PWM0_BRAKE0 / PWM0_CH1 / TM2 / CLKO / INT4
62	PE.14 / EBI_AD8 / UART2_TXD
63	PE.15 / EBI_AD9 / UART2_RXD
64	nRESET
65	PF.0 / UART1_TXD / I2C1_SCL / UART0_TXD / BPWM1_CH0 / ICE_DAT

Pin	M032KG6AE Pin Function
66	PF.1 / UART1_RXD / I2C1_SDA / UART0_RXD / BPWM1_CH1 / ICE_CLK
67	PD.9 / EBI_AD7 / UART2_nCTS
68	PD.8 / EBI_AD6 / UART2_nRTS
69	PC.5 / EBI_AD5 / QSPI0_MISO1 / UART2_TXD / I2C1_SCL / UART4_TXD / PWM1_CH0
70	PC.4 / EBI_AD4 / QSPI0_MOSI1 / UART2_RXD / I2C1_SDA / UART4_RXD / PWM1_CH1
71	PC.3 / EBI_AD3 / QSPI0_SS / UART2_nRTS / I2C0_SMBAL / UART3_TXD / PWM1_CH2
72	PC.2 / EBI_AD2 / QSPI0_CLK / UART2_nCTS / I2C0_SMBSUS / UART3_RXD / PWM1_CH3
73	PC.1 / EBI_AD1 / QSPI0_MISO0 / UART2_TXD / I2C0_SCL / PWM1_CH4 / ACMP0_O / ADC0_ST
74	PC.0 / EBI_AD0 / QSPI0_MOSI0 / UART2_RXD / I2C0_SDA / PWM1_CH5 / ACMP1_O
75	VSS
76	V_{DD}
77	PG.9 / EBI_AD0 / BPWM0_CH5
78	PG.10 / EBI_AD1 / BPWM0_CH4
79	PG.11 / EBI_AD2 / BPWM0_CH3
80	PG.12 / EBI_AD3 / BPWM0_CH2
81	PG.13 / EBI_AD4 / BPWM0_CH1
82	PG.14 / EBI_AD5 / BPWM0_CH0
83	PG.15 / CLKO / ADC0_ST
84	PD.7 / UART1_TXD / I2C0_SCL / USCI1_CLK
85	PD.6 / UART1_RXD / I2C0_SDA / USCI1_DAT1
86	PD.5 / I2C1_SCL / USCI1_DAT0
87	PD.4 / USCI0_CTL0 / I2C1_SDA / USCI1_CTL1
88	PD.3 / EBI_AD10 / USCI0_CTL1 / SPI0_SS / UART3_nRTS / USCI1_CTL0 / UART0_TXD
89	PD.2 / EBI_AD11 / USCI0_DAT1 / SPI0_CLK / UART3_nCTS / UART0_RXD
90	PD.1 / EBI_AD12 / USCI0_DAT0 / SPI0_MISO / UART3_TXD
91	PD.0 / EBI_AD13 / USCI0_CLK / SPI0_MOSI / UART3_RXD / TM2
92	PD.13 / EBI_AD10 / SPI0_I2SMCLK
93	USB_VBUS
94	USB_D-
95	USB_D+
96	USB_V_{DD}33_CAP
97	PE.7 / UART5_TXD / PWM0_CH0 / BPWM0_CH5
98	PE.6 / USCI0_CTL0 / UART5_RXD / PWM0_CH1 / BPWM0_CH4

Pin	M032KG6AE Pin Function
99	PE.5 / EBI_nRD / USCI0_CTL1 / PWM0_CH2 / BPWM0_CH3
100	PE.4 / EBI_nWR / USCI0_DAT1 / PWM0_CH3 / BPWM0_CH2
101	PE.3 / EBI_MCLK / USCI0_DAT0 / PWM0_CH4 / BPWM0_CH1
102	PE.2 / EBI_ALE / USCI0_CLK / PWM0_CH5 / BPWM0_CH0
103	VSS
104	V_{DD}
105	PE.1 / EBI_AD10 / QSPI0_MISO0 / UART3_TXD / I2C1_SCL / UART4_nCTS
106	PE.0 / EBI_AD11 / QSPI0_MOSI0 / UART3_RXD / I2C1_SDA / UART4_nRTS
107	PH.8 / EBI_AD12 / QSPI0_CLK / UART3_nRTS / UART1_TXD
108	PH.9 / EBI_AD13 / QSPI0_SS / UART3_nCTS / UART1_RXD
109	PH.10 / EBI_AD14 / QSPI0_MISO1 / UART4_TXD / UART0_TXD
110	PH.11 / EBI_AD15 / QSPI0_MOSI1 / UART4_RXD / UART0_RXD / PWM0_CH5
111	PD.14 / EBI_nCS0 / SPI0_I2SMCLK / USCI0_CTL0 / PWM0_CH4
112	VSS
113	LDO_CAP
114	V_{DD}
115	PC.14 / EBI_AD11 / SPI0_I2SMCLK / USCI0_CTL0 / QSPI0_CLK / TM1
116	PB.15 / ADC0_CH15 / EBI_AD12 / SPI0_SS / USCI0_CTL1 / UART0_nCTS / UART3_TXD / PWM1_CH0 / TM0_EXT / PWM0_BRAKE1
117	PB.14 / ADC0_CH14 / EBI_AD13 / SPI0_CLK / USCI0_DAT1 / UART0_nRTS / UART3_RXD / PWM1_CH1 / TM1_EXT / CLKO
118	PB.13 / ADC0_CH13 / ACMP0_P3 / ACMP1_P3 / EBI_AD14 / SPI0_MISO / USCI0_DAT0 / UART0_TXD / UART3_nRTS / PWM1_CH2 / TM2_EXT
119	PB.12 / ADC0_CH12 / ACMP0_P2 / ACMP1_P2 / EBI_AD15 / SPI0_MOSI / USCI0_CLK / UART0_RXD / UART3_nCTS / PWM1_CH3 / TM3_EXT
120	AV_{DD}
121	V_{REF}
122	AVSS
123	PB.11 / ADC0_CH11 / EBI_ADR16 / UART0_nCTS / UART4_TXD / I2C1_SCL / SPI0_I2SMCLK / BPWM1_CH0
124	PB.10 / ADC0_CH10 / EBI_ADR17 / USCI1_CTL0 / UART0_nRTS / UART4_RXD / I2C1_SDA / BPWM1_CH1
125	PB.9 / ADC0_CH9 / EBI_ADR18 / USCI1_CTL1 / UART0_TXD / UART1_nCTS / BPWM1_CH2
126	PB.8 / ADC0_CH8 / EBI_ADR19 / USCI1_CLK / UART0_RXD / UART1_nRTS / BPWM1_CH3
127	PB.7 / ADC0_CH7 / EBI_nWRL / USCI1_DAT0 / UART1_TXD / EBI_nCS0 / BPWM1_CH4 / PWM1_BRAKE0 / PWM1_CH4 / INT5 / ACMP0_O
128	PB.6 / ADC0_CH6 / EBI_nWRH / USCI1_DAT1 / UART1_RXD / EBI_nCS1 / BPWM1_CH5 / PWM1_BRAKE1 / PWM1_CH5 / INT4 / ACMP1_O

Table 5.1-35 M032KG6AE Multi-function Pin Table

M032KG8AE

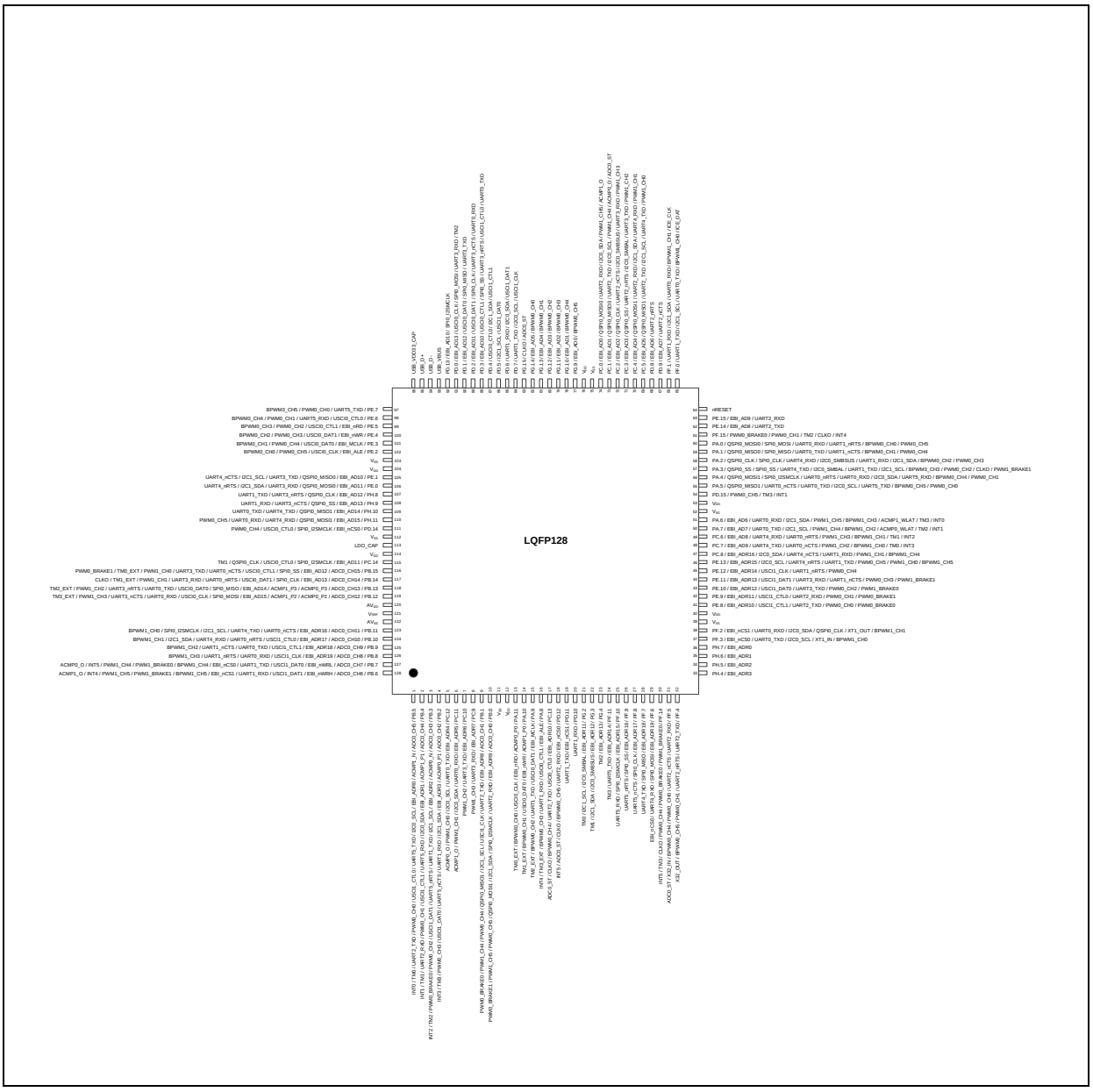

Figure 5.1-48 M032KG8AE Multi-function Pin Diagram

Pin	M032KG8AE Pin Function
1	PB.5 / ADC0_CH5 / ACMP1_N / EBI_ADR0 / I2C0_SCL / UART5_TXD / USCI1_CTL0 / PWM0_CH0 / UART2_TXD / TM0 / INT0
2	PB.4 / ADC0_CH4 / ACMP1_P1 / EBI_ADR1 / I2C0_SDA / UART5_RXD / USCI1_CTL1 / PWM0_CH1 / UART2_RXD / TM1 / INT1
3	PB.3 / ADC0_CH3 / ACMP0_N / EBI_ADR2 / I2C1_SCL / UART1_TXD / UART5_nRTS / USCI1_DAT1 / PWM0_CH2 /

Pin	M032KG8AE Pin Function
	PWM0_BRAKE0 / TM2 / INT2
4	PB.2 / ADC0_CH2 / ACMP0_P1 / EBI_ADR3 / I2C1_SDA / UART1_RXD / UART5_nCTS / USCI1_DAT0 / PWM0_CH3 / TM3 / INT3
5	PC.12 / EBI_ADR4 / UART0_TXD / I2C0_SCL / PWM1_CH0 / ACMP0_O
6	PC.11 / EBI_ADR5 / UART0_RXD / I2C0_SDA / PWM1_CH1 / ACMP1_O
7	PC.10 / EBI_ADR6 / UART3_TXD / PWM1_CH2
8	PC.9 / EBI_ADR7 / UART3_RXD / PWM1_CH3
9	PB.1 / ADC0_CH1 / EBI_ADR8 / UART2_TXD / USCI1_CLK / I2C1_SCL / QSPI0_MISO1 / PWM0_CH4 / PWM1_CH4 / PWM0_BRAKE0
10	PB.0 / ADC0_CH0 / EBI_ADR9 / UART2_RXD / SPI0_I2SMCLK / I2C1_SDA / QSPI0_MOSI1 / PWM0_CH5 / PWM1_CH5 / PWM0_BRAKE1
11	VSS
12	V_{DD}
13	PA.11 / ACMP0_P0 / EBI_nRD / USCI0_CLK / BPWM0_CH0 / TM0_EXT
14	PA.10 / ACMP1_P0 / EBI_nWR / USCI0_DAT0 / BPWM0_CH1 / TM1_EXT
15	PA.9 / EBI_MCLK / USCI0_DAT1 / UART1_TXD / BPWM0_CH2 / TM2_EXT
16	PA.8 / EBI_ALE / USCI0_CTL1 / UART1_RXD / BPWM0_CH3 / TM3_EXT / INT4
17	PC.13 / EBI_ADR10 / USCI0_CTL0 / UART2_TXD / BPWM0_CH4 / CLKO / ADC0_ST
18	PD.12 / EBI_nCS0 / UART2_RXD / BPWM0_CH5 / CLKO / ADC0_ST / INT5
19	PD.11 / EBI_nCS1 / UART1_TXD
20	PD.10 / UART1_RXD
21	PG.2 / EBI_ADR11 / I2C0_SMBAL / I2C1_SCL / TM0
22	PG.3 / EBI_ADR12 / I2C0_SMBSUS / I2C1_SDA / TM1
23	PG.4 / EBI_ADR13 / TM2
24	PF.11 / EBI_ADR14 / UART5_TXD / TM3
25	PF.10 / EBI_ADR15 / SPI0_I2SMCLK / UART5_RXD
26	PF.9 / EBI_ADR16 / SPI0_SS / UART5_nRTS
27	PF.8 / EBI_ADR17 / SPI0_CLK / UART5_nCTS
28	PF.7 / EBI_ADR18 / SPI0_MISO / UART4_TXD
29	PF.6 / EBI_ADR19 / SPI0_MOSI / UART4_RXD / EBI_nCS0
30	PF.14 / PWM1_BRAKE0 / PWM0_BRAKE0 / PWM0_CH4 / CLKO / TM3 / INT5
31	PF.5 / UART2_RXD / UART2_nCTS / PWM0_CH0 / BPWM0_CH4 / X32_IN / ADC0_ST
32	PF.4 / UART2_TXD / UART2_nRTS / PWM0_CH1 / BPWM0_CH5 / X32_OUT
33	PH.4 / EBI_ADR3
34	PH.5 / EBI_ADR2

Pin	M032KG8AE Pin Function
35	PH.6 / EBI_ADR1
36	PH.7 / EBI_ADR0
37	PF.3 / EBI_nCS0 / UART0_TXD / I2C0_SCL / XT1_IN / BPWM1_CH0
38	PF.2 / EBI_nCS1 / UART0_RXD / I2C0_SDA / QSPI0_CLK / XT1_OUT / BPWM1_CH1
39	VSS
40	V_{DD}
41	PE.8 / EBI_ADR10 / USCI1_CTL1 / UART2_TXD / PWM0_CH0 / PWM0_BRAKE0
42	PE.9 / EBI_ADR11 / USCI1_CTL0 / UART2_RXD / PWM0_CH1 / PWM0_BRAKE1
43	PE.10 / EBI_ADR12 / USCI1_DAT0 / UART3_TXD / PWM0_CH2 / PWM1_BRAKE0
44	PE.11 / EBI_ADR13 / USCI1_DAT1 / UART3_RXD / UART1_nCTS / PWM0_CH3 / PWM1_BRAKE1
45	PE.12 / EBI_ADR14 / USCI1_CLK / UART1_nRTS / PWM0_CH4
46	PE.13 / EBI_ADR15 / I2C0_SCL / UART4_nRTS / UART1_TXD / PWM0_CH5 / PWM1_CH0 / BPWM1_CH5
47	PC.8 / EBI_ADR16 / I2C0_SDA / UART4_nCTS / UART1_RXD / PWM1_CH1 / BPWM1_CH4
48	PC.7 / EBI_AD9 / UART4_TXD / UART0_nCTS / PWM1_CH2 / BPWM1_CH0 / TM0 / INT3
49	PC.6 / EBI_AD8 / UART4_RXD / UART0_nRTS / PWM1_CH3 / BPWM1_CH1 / TM1 / INT2
50	PA.7 / EBI_AD7 / UART0_TXD / I2C1_SCL / PWM1_CH4 / BPWM1_CH2 / ACMP0_WLAT / TM2 / INT1
51	PA.6 / EBI_AD6 / UART0_RXD / I2C1_SDA / PWM1_CH5 / BPWM1_CH3 / ACMP1_WLAT / TM3 / INT0
52	VSS
53	V_{DD}
54	PD.15 / PWM0_CH5 / TM3 / INT1
55	PA.5 / QSPI0_MISO1 / UART0_nCTS / UART0_TXD / I2C0_SCL / UART5_TXD / BPWM0_CH5 / PWM0_CH0
56	PA.4 / QSPI0_MOSI1 / SPI0_I2SMCLK / UART0_nRTS / UART0_RXD / I2C0_SDA / UART5_RXD / BPWM0_CH4 / PWM0_CH1
57	PA.3 / QSPI0_SS / SPI0_SS / UART4_TXD / I2C0_SMBAL / UART1_TXD / I2C1_SCL / BPWM0_CH3 / PWM0_CH2 / CLKO / PWM1_BRAKE1
58	PA.2 / QSPI0_CLK / SPI0_CLK / UART4_RXD / I2C0_SMBSUS / UART1_RXD / I2C1_SDA / BPWM0_CH2 / PWM0_CH3
59	PA.1 / QSPI0_MISO0 / SPI0_MISO / UART0_TXD / UART1_nCTS / BPWM0_CH1 / PWM0_CH4
60	PA.0 / QSPI0_MOSI0 / SPI0_MOSI / UART0_RXD / UART1_nRTS / BPWM0_CH0 / PWM0_CH5
61	PF.15 / PWM0_BRAKE0 / PWM0_CH1 / TM2 / CLKO / INT4
62	PE.14 / EBI_AD8 / UART2_TXD
63	PE.15 / EBI_AD9 / UART2_RXD
64	nRESET
65	PF.0 / UART1_TXD / I2C1_SCL / UART0_TXD / BPWM1_CH0 / ICE_DAT
66	PF.1 / UART1_RXD / I2C1_SDA / UART0_RXD / BPWM1_CH1 / ICE_CLK

Pin	M032KG8AE Pin Function
67	PD.9 / EBI_AD7 / UART2_nCTS
68	PD.8 / EBI_AD6 / UART2_nRTS
69	PC.5 / EBI_AD5 / QSPI0_MISO1 / UART2_TXD / I2C1_SCL / UART4_TXD / PWM1_CH0
70	PC.4 / EBI_AD4 / QSPI0_MOSI1 / UART2_RXD / I2C1_SDA / UART4_RXD / PWM1_CH1
71	PC.3 / EBI_AD3 / QSPI0_SS / UART2_nRTS / I2C0_SMBAL / UART3_TXD / PWM1_CH2
72	PC.2 / EBI_AD2 / QSPI0_CLK / UART2_nCTS / I2C0_SMBSUS / UART3_RXD / PWM1_CH3
73	PC.1 / EBI_AD1 / QSPI0_MISO0 / UART2_TXD / I2C0_SCL / PWM1_CH4 / ACMP0_O / ADC0_ST
74	PC.0 / EBI_AD0 / QSPI0_MOSI0 / UART2_RXD / I2C0_SDA / PWM1_CH5 / ACMP1_O
75	VSS
76	V_{DD}
77	PG.9 / EBI_AD0 / BPWM0_CH5
78	PG.10 / EBI_AD1 / BPWM0_CH4
79	PG.11 / EBI_AD2 / BPWM0_CH3
80	PG.12 / EBI_AD3 / BPWM0_CH2
81	PG.13 / EBI_AD4 / BPWM0_CH1
82	PG.14 / EBI_AD5 / BPWM0_CH0
83	PG.15 / CLKO / ADC0_ST
84	PD.7 / UART1_TXD / I2C0_SCL / USCI1_CLK
85	PD.6 / UART1_RXD / I2C0_SDA / USCI1_DAT1
86	PD.5 / I2C1_SCL / USCI1_DAT0
87	PD.4 / USCI0_CTL0 / I2C1_SDA / USCI1_CTL1
88	PD.3 / EBI_AD10 / USCI0_CTL1 / SPI0_SS / UART3_nRTS / USCI1_CTL0 / UART0_TXD
89	PD.2 / EBI_AD11 / USCI0_DAT1 / SPI0_CLK / UART3_nCTS / UART0_RXD
90	PD.1 / EBI_AD12 / USCI0_DAT0 / SPI0_MISO / UART3_TXD
91	PD.0 / EBI_AD13 / USCI0_CLK / SPI0_MOSI / UART3_RXD / TM2
92	PD.13 / EBI_AD10 / SPI0_I2SMCLK
93	USB_VBUS
94	USB_D-
95	USB_D+
96	USB_V_{DD}33_CAP
97	PE.7 / UART5_TXD / PWM0_CH0 / BPWM0_CH5
98	PE.6 / USCI0_CTL0 / UART5_RXD / PWM0_CH1 / BPWM0_CH4
99	PE.5 / EBI_nRD / USCI0_CTL1 / PWM0_CH2 / BPWM0_CH3

Pin	M032KG8AE Pin Function
100	PE.4 / EBI_nWR / USCI0_DAT1 / PWM0_CH3 / BPWM0_CH2
101	PE.3 / EBI_MCLK / USCI0_DAT0 / PWM0_CH4 / BPWM0_CH1
102	PE.2 / EBI_ALE / USCI0_CLK / PWM0_CH5 / BPWM0_CH0
103	VSS
104	V_{DD}
105	PE.1 / EBI_AD10 / QSPI0_MISO0 / UART3_TXD / I2C1_SCL / UART4_nCTS
106	PE.0 / EBI_AD11 / QSPI0_MOSI0 / UART3_RXD / I2C1_SDA / UART4_nRTS
107	PH.8 / EBI_AD12 / QSPI0_CLK / UART3_nRTS / UART1_TXD
108	PH.9 / EBI_AD13 / QSPI0_SS / UART3_nCTS / UART1_RXD
109	PH.10 / EBI_AD14 / QSPI0_MISO1 / UART4_TXD / UART0_TXD
110	PH.11 / EBI_AD15 / QSPI0_MOSI1 / UART4_RXD / UART0_RXD / PWM0_CH5
111	PD.14 / EBI_nCS0 / SPI0_I2SMCLK / USCI0_CTL0 / PWM0_CH4
112	VSS
113	LDO_CAP
114	V_{DD}
115	PC.14 / EBI_AD11 / SPI0_I2SMCLK / USCI0_CTL0 / QSPI0_CLK / TM1
116	PB.15 / ADC0_CH15 / EBI_AD12 / SPI0_SS / USCI0_CTL1 / UART0_nCTS / UART3_TXD / PWM1_CH0 / TM0_EXT / PWM0_BRAKE1
117	PB.14 / ADC0_CH14 / EBI_AD13 / SPI0_CLK / USCI0_DAT1 / UART0_nRTS / UART3_RXD / PWM1_CH1 / TM1_EXT / CLKO
118	PB.13 / ADC0_CH13 / ACMP0_P3 / ACMP1_P3 / EBI_AD14 / SPI0_MISO / USCI0_DAT0 / UART0_TXD / UART3_nRTS / PWM1_CH2 / TM2_EXT
119	PB.12 / ADC0_CH12 / ACMP0_P2 / ACMP1_P2 / EBI_AD15 / SPI0_MOSI / USCI0_CLK / UART0_RXD / UART3_nCTS / PWM1_CH3 / TM3_EXT
120	AV_{DD}
121	V_{REF}
122	AVSS
123	PB.11 / ADC0_CH11 / EBI_ADR16 / UART0_nCTS / UART4_TXD / I2C1_SCL / SPI0_I2SMCLK / BPWM1_CH0
124	PB.10 / ADC0_CH10 / EBI_ADR17 / USCI1_CTL0 / UART0_nRTS / UART4_RXD / I2C1_SDA / BPWM1_CH1
125	PB.9 / ADC0_CH9 / EBI_ADR18 / USCI1_CTL1 / UART0_TXD / UART1_nCTS / BPWM1_CH2
126	PB.8 / ADC0_CH8 / EBI_ADR19 / USCI1_CLK / UART0_RXD / UART1_nRTS / BPWM1_CH3
127	PB.7 / ADC0_CH7 / EBI_nWRL / USCI1_DAT0 / UART1_TXD / EBI_nCS0 / BPWM1_CH4 / PWM1_BRAKE0 / PWM1_CH4 / INT5 / ACMP0_O
128	PB.6 / ADC0_CH6 / EBI_nWRH / USCI1_DAT1 / UART1_RXD / EBI_nCS1 / BPWM1_CH5 / PWM1_BRAKE1 / PWM1_CH5 / INT4 / ACMP1_O

Table 5.1-36 M032KG8AE Multi-function Pin Table

M032KIAAE

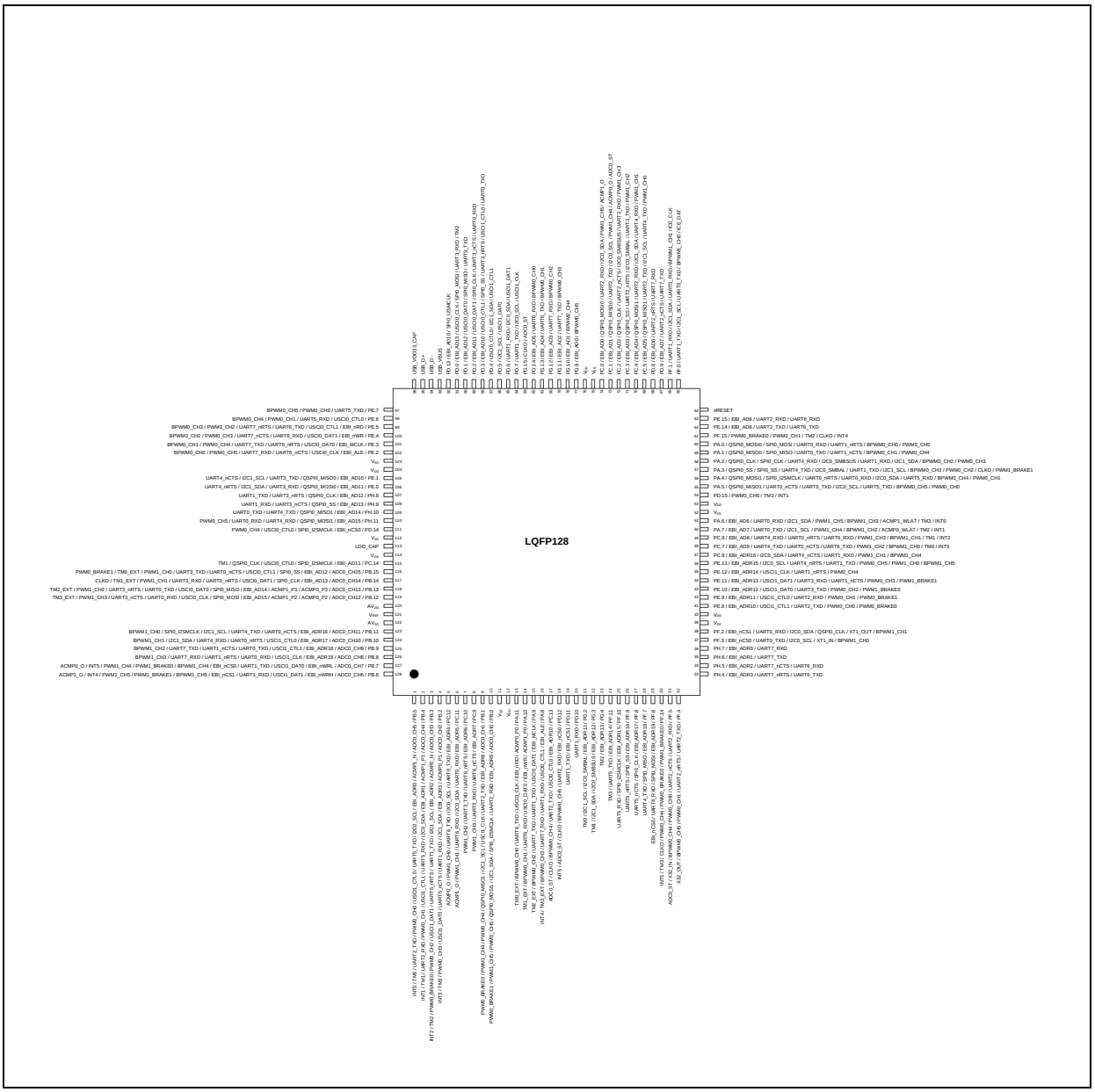

Figure 5.1-49 M032KIAAE Multi-function Pin Diagram

Pin	M032KIAAE Pin Function
1	PB.5 / ADC0_CH5 / ACMP1_N / EBI_ADR0 / I2C0_SCL / UART5_TXD / USCI1_CTL0 / PWM0_CH0 / UART2_TXD / TM0 / INT0
2	PB.4 / ADC0_CH4 / ACMP1_P1 / EBI_ADR1 / I2C0_SDA / UART5_RXD / USCI1_CTL1 / PWM0_CH1 / UART2_RXD / TM1 / INT1
3	PB.3 / ADC0_CH3 / ACMP0_N / EBI_ADR2 / I2C1_SCL / UART1_TXD / UART5_nRTS / USCI1_DAT1 / PWM0_CH2 / PWM0_BRAKE0 / TM2 / INT2

Pin	M032KIAAE Pin Function
4	PB.2 / ADC0_CH2 / ACMP0_P1 / EBI_ADR3 / I2C1_SDA / UART1_RXD / UART5_nCTS / USCI1_DAT0 / PWM0_CH3 / TM3 / INT3
5	PC.12 / EBI_ADR4 / UART0_TXD / I2C0_SCL / UART6_TXD / PWM1_CH0 / ACMP0_O
6	PC.11 / EBI_ADR5 / UART0_RXD / I2C0_SDA / UART6_RXD / PWM1_CH1 / ACMP1_O
7	PC.10 / EBI_ADR6 / UART6_nRTS / UART3_TXD / PWM1_CH2
8	PC.9 / EBI_ADR7 / UART6_nCTS / UART3_RXD / PWM1_CH3
9	PB.1 / ADC0_CH1 / EBI_ADR8 / UART2_TXD / USCI1_CLK / I2C1_SCL / QSPI0_MISO1 / PWM0_CH4 / PWM1_CH4 / PWM0_BRAKE0
10	PB.0 / ADC0_CH0 / EBI_ADR9 / UART2_RXD / SPI0_I2SMCLK / I2C1_SDA / QSPI0_MOSI1 / PWM0_CH5 / PWM1_CH5 / PWM0_BRAKE1
11	VSS
12	V_{DD}
13	PA.11 / ACMP0_P0 / EBI_nRD / USCI0_CLK / UART6_TXD / BPWM0_CH0 / TM0_EXT
14	PA.10 / ACMP1_P0 / EBI_nWR / USCI0_DAT0 / UART6_RXD / BPWM0_CH1 / TM1_EXT
15	PA.9 / EBI_MCLK / USCI0_DAT1 / UART1_TXD / UART7_TXD / BPWM0_CH2 / TM2_EXT
16	PA.8 / EBI_ALE / USCI0_CTL1 / UART1_RXD / UART7_RXD / BPWM0_CH3 / TM3_EXT / INT4
17	PC.13 / EBI_ADR10 / USCI0_CTL0 / UART2_TXD / BPWM0_CH4 / CLKO / ADC0_ST
18	PD.12 / EBI_nCS0 / UART2_RXD / BPWM0_CH5 / CLKO / ADC0_ST / INT5
19	PD.11 / EBI_nCS1 / UART1_TXD
20	PD.10 / UART1_RXD
21	PG.2 / EBI_ADR11 / I2C0_SMBAL / I2C1_SCL / TM0
22	PG.3 / EBI_ADR12 / I2C0_SMBSUS / I2C1_SDA / TM1
23	PG.4 / EBI_ADR13 / TM2
24	PF.11 / EBI_ADR14 / UART5_TXD / TM3
25	PF.10 / EBI_ADR15 / SPI0_I2SMCLK / UART5_RXD
26	PF.9 / EBI_ADR16 / SPI0_SS / UART5_nRTS
27	PF.8 / EBI_ADR17 / SPI0_CLK / UART5_nCTS
28	PF.7 / EBI_ADR18 / SPI0_MISO / UART4_TXD
29	PF.6 / EBI_ADR19 / SPI0_MOSI / UART4_RXD / EBI_nCS0
30	PF.14 / PWM1_BRAKE0 / PWM0_BRAKE0 / PWM0_CH4 / CLKO / TM3 / INT5
31	PF.5 / UART2_RXD / UART2_nCTS / PWM0_CH0 / BPWM0_CH4 / X32_IN / ADC0_ST
32	PF.4 / UART2_TXD / UART2_nRTS / PWM0_CH1 / BPWM0_CH5 / X32_OUT
33	PH.4 / EBI_ADR3 / UART7_nRTS / UART6_TXD
34	PH.5 / EBI_ADR2 / UART7_nCTS / UART6_RXD
35	PH.6 / EBI_ADR1 / UART7_TXD

Pin	M032KIAAE Pin Function
36	PH.7 / EBI_ADR0 / UART7_RXD
37	PF.3 / EBI_nCS0 / UART0_TXD / I2C0_SCL / XT1_IN / BPWM1_CH0
38	PF.2 / EBI_nCS1 / UART0_RXD / I2C0_SDA / QSPI0_CLK / XT1_OUT / BPWM1_CH1
39	VSS
40	V_{DD}
41	PE.8 / EBI_ADR10 / USCI1_CTL1 / UART2_TXD / PWM0_CH0 / PWM0_BRAKE0
42	PE.9 / EBI_ADR11 / USCI1_CTL0 / UART2_RXD / PWM0_CH1 / PWM0_BRAKE1
43	PE.10 / EBI_ADR12 / USCI1_DAT0 / UART3_TXD / PWM0_CH2 / PWM1_BRAKE0
44	PE.11 / EBI_ADR13 / USCI1_DAT1 / UART3_RXD / UART1_nCTS / PWM0_CH3 / PWM1_BRAKE1
45	PE.12 / EBI_ADR14 / USCI1_CLK / UART1_nRTS / PWM0_CH4
46	PE.13 / EBI_ADR15 / I2C0_SCL / UART4_nRTS / UART1_TXD / PWM0_CH5 / PWM1_CH0 / BPWM1_CH5
47	PC.8 / EBI_ADR16 / I2C0_SDA / UART4_nCTS / UART1_RXD / PWM1_CH1 / BPWM1_CH4
48	PC.7 / EBI_AD9 / UART4_TXD / UART0_nCTS / UART6_TXD / PWM1_CH2 / BPWM1_CH0 / TM0 / INT3
49	PC.6 / EBI_AD8 / UART4_RXD / UART0_nRTS / UART6_RXD / PWM1_CH3 / BPWM1_CH1 / TM1 / INT2
50	PA.7 / EBI_AD7 / UART0_TXD / I2C1_SCL / PWM1_CH4 / BPWM1_CH2 / ACMP0_WLAT / TM2 / INT1
51	PA.6 / EBI_AD6 / UART0_RXD / I2C1_SDA / PWM1_CH5 / BPWM1_CH3 / ACMP1_WLAT / TM3 / INT0
52	VSS
53	V_{DD}
54	PD.15 / PWM0_CH5 / TM3 / INT1
55	PA.5 / QSPI0_MISO1 / UART0_nCTS / UART0_TXD / I2C0_SCL / UART5_TXD / BPWM0_CH5 / PWM0_CH0
56	PA.4 / QSPI0_MOSI1 / SPI0_I2SMCLK / UART0_nRTS / UART0_RXD / I2C0_SDA / UART5_RXD / BPWM0_CH4 / PWM0_CH1
57	PA.3 / QSPI0_SS / SPI0_SS / UART4_TXD / I2C0_SMBAL / UART1_TXD / I2C1_SCL / BPWM0_CH3 / PWM0_CH2 / CLKO / PWM1_BRAKE1
58	PA.2 / QSPI0_CLK / SPI0_CLK / UART4_RXD / I2C0_SMBSUS / UART1_RXD / I2C1_SDA / BPWM0_CH2 / PWM0_CH3
59	PA.1 / QSPI0_MISO0 / SPI0_MISO / UART0_TXD / UART1_nCTS / BPWM0_CH1 / PWM0_CH4
60	PA.0 / QSPI0_MOSI0 / SPI0_MOSI / UART0_RXD / UART1_nRTS / BPWM0_CH0 / PWM0_CH5
61	PF.15 / PWM0_BRAKE0 / PWM0_CH1 / TM2 / CLKO / INT4
62	PE.14 / EBI_AD8 / UART2_TXD / UART6_TXD
63	PE.15 / EBI_AD9 / UART2_RXD / UART6_RXD
64	nRESET
65	PF.0 / UART1_TXD / I2C1_SCL / UART0_TXD / BPWM1_CH0 / ICE_DAT
66	PF.1 / UART1_RXD / I2C1_SDA / UART0_RXD / BPWM1_CH1 / ICE_CLK
67	PD.9 / EBI_AD7 / UART2_nCTS / UART7_TXD

Pin	M032KIAAE Pin Function
68	PD.8 / EBI_AD6 / UART2_nRTS / UART7_RXD
69	PC.5 / EBI_AD5 / QSPI0_MISO1 / UART2_TXD / I2C1_SCL / UART4_TXD / PWM1_CH0
70	PC.4 / EBI_AD4 / QSPI0_MOSI1 / UART2_RXD / I2C1_SDA / UART4_RXD / PWM1_CH1
71	PC.3 / EBI_AD3 / QSPI0_SS / UART2_nRTS / I2C0_SMBAL / UART3_TXD / PWM1_CH2
72	PC.2 / EBI_AD2 / QSPI0_CLK / UART2_nCTS / I2C0_SMBSUS / UART3_RXD / PWM1_CH3
73	PC.1 / EBI_AD1 / QSPI0_MISO0 / UART2_TXD / I2C0_SCL / PWM1_CH4 / ACMP0_O / ADC0_ST
74	PC.0 / EBI_AD0 / QSPI0_MOSI0 / UART2_RXD / I2C0_SDA / PWM1_CH5 / ACMP1_O
75	VSS
76	V_{DD}
77	PG.9 / EBI_AD0 / BPWM0_CH5
78	PG.10 / EBI_AD1 / BPWM0_CH4
79	PG.11 / EBI_AD2 / UART7_TXD / BPWM0_CH3
80	PG.12 / EBI_AD3 / UART7_RXD / BPWM0_CH2
81	PG.13 / EBI_AD4 / UART6_TXD / BPWM0_CH1
82	PG.14 / EBI_AD5 / UART6_RXD / BPWM0_CH0
83	PG.15 / CLKO / ADC0_ST
84	PD.7 / UART1_TXD / I2C0_SCL / USCI1_CLK
85	PD.6 / UART1_RXD / I2C0_SDA / USCI1_DAT1
86	PD.5 / I2C1_SCL / USCI1_DAT0
87	PD.4 / USCI0_CTL0 / I2C1_SDA / USCI1_CTL1
88	PD.3 / EBI_AD10 / USCI0_CTL1 / SPI0_SS / UART3_nRTS / USCI1_CTL0 / UART0_TXD
89	PD.2 / EBI_AD11 / USCI0_DAT1 / SPI0_CLK / UART3_nCTS / UART0_RXD
90	PD.1 / EBI_AD12 / USCI0_DAT0 / SPI0_MISO / UART3_TXD
91	PD.0 / EBI_AD13 / USCI0_CLK / SPI0_MOSI / UART3_RXD / TM2
92	PD.13 / EBI_AD10 / SPI0_I2SMCLK
93	USB_VBUS
94	USB_D-
95	USB_D+
96	USB_V_{DD}33_CAP
97	PE.7 / UART5_TXD / PWM0_CH0 / BPWM0_CH5
98	PE.6 / USCI0_CTL0 / UART5_RXD / PWM0_CH1 / BPWM0_CH4
99	PE.5 / EBI_nRD / USCI0_CTL1 / UART6_TXD / UART7_nRTS / PWM0_CH2 / BPWM0_CH3
100	PE.4 / EBI_nWR / USCI0_DAT1 / UART6_RXD / UART7_nCTS / PWM0_CH3 / BPWM0_CH2

Pin	M032KIAAE Pin Function
101	PE.3 / EBI_MCLK / USCI0_DAT0 / UART6_nRTS / UART7_TXD / PWM0_CH4 / BPWM0_CH1
102	PE.2 / EBI_ALE / USCI0_CLK / UART6_nCTS / UART7_RXD / PWM0_CH5 / BPWM0_CH0
103	VSS
104	V_{DD}
105	PE.1 / EBI_AD10 / QSPI0_MISO0 / UART3_TXD / I2C1_SCL / UART4_nCTS
106	PE.0 / EBI_AD11 / QSPI0_MOSI0 / UART3_RXD / I2C1_SDA / UART4_nRTS
107	PH.8 / EBI_AD12 / QSPI0_CLK / UART3_nRTS / UART1_TXD
108	PH.9 / EBI_AD13 / QSPI0_SS / UART3_nCTS / UART1_RXD
109	PH.10 / EBI_AD14 / QSPI0_MISO1 / UART4_TXD / UART0_TXD
110	PH.11 / EBI_AD15 / QSPI0_MOSI1 / UART4_RXD / UART0_RXD / PWM0_CH5
111	PD.14 / EBI_nCS0 / SPI0_I2SMCLK / USCI0_CTL0 / PWM0_CH4
112	VSS
113	LDO_CAP
114	V_{DD}
115	PC.14 / EBI_AD11 / SPI0_I2SMCLK / USCI0_CTL0 / QSPI0_CLK / TM1
116	PB.15 / ADC0_CH15 / EBI_AD12 / SPI0_SS / USCI0_CTL1 / UART0_nCTS / UART3_TXD / PWM1_CH0 / TM0_EXT / PWM0_BRAKE1
117	PB.14 / ADC0_CH14 / EBI_AD13 / SPI0_CLK / USCI0_DAT1 / UART0_nRTS / UART3_RXD / PWM1_CH1 / TM1_EXT / CLKO
118	PB.13 / ADC0_CH13 / ACMP0_P3 / ACMP1_P3 / EBI_AD14 / SPI0_MISO / USCI0_DAT0 / UART0_TXD / UART3_nRTS / PWM1_CH2 / TM2_EXT
119	PB.12 / ADC0_CH12 / ACMP0_P2 / ACMP1_P2 / EBI_AD15 / SPI0_MOSI / USCI0_CLK / UART0_RXD / UART3_nCTS / PWM1_CH3 / TM3_EXT
120	AV_{DD}
121	V_{REF}
122	AVSS
123	PB.11 / ADC0_CH11 / EBI_ADR16 / UART0_nCTS / UART4_TXD / I2C1_SCL / SPI0_I2SMCLK / BPWM1_CH0
124	PB.10 / ADC0_CH10 / EBI_ADR17 / USCI1_CTL0 / UART0_nRTS / UART4_RXD / I2C1_SDA / BPWM1_CH1
125	PB.9 / ADC0_CH9 / EBI_ADR18 / USCI1_CTL1 / UART0_TXD / UART1_nCTS / UART7_TXD / BPWM1_CH2
126	PB.8 / ADC0_CH8 / EBI_ADR19 / USCI1_CLK / UART0_RXD / UART1_nRTS / UART7_RXD / BPWM1_CH3
127	PB.7 / ADC0_CH7 / EBI_nWRL / USCI1_DAT0 / UART1_TXD / EBI_nCS0 / BPWM1_CH4 / PWM1_BRAKE0 / PWM1_CH4 / INT5 / ACMP0_O
128	PB.6 / ADC0_CH6 / EBI_nWRH / USCI1_DAT1 / UART1_RXD / EBI_nCS1 / BPWM1_CH5 / PWM1_BRAKE1 / PWM1_CH5 / INT4 / ACMP1_O

Table 5.1-37 M032KIAAE Multi-function Pin Table

5.2 Pin Mapping

Different part number with the same package might have different function. Please refer to the selection guide in section 3.2, Pin Configuration in section 4.1 or NuTool - PinConfig.

Corresponding Part Number: M031xB, M031xC, M031xD, M031xE, M031xG, M031xI, M032xC, M032xD, M032xE, M032xG, M032xI series.

	M031 Series						M032 Series					
Pin Name	**20 Pin**	**28 Pin**	**32 Pin**	**48 Pin**	**64 Pin**	**128 Pin**	**20 Pin**	**28 Pin**	**32 Pin**	**48 Pin**	**64 Pin**	**128 Pin**
PB.5	8	12	1	1	2	1		12	1	1	2	1
PB.4	9	13	2	2	3	2		13	2	2	3	2
PB.3	10	14	3	3	4	3		14	3	3	4	3
PB.2	11	15	4	4	5	4		15	4	4	5	4
PC.12						5						5
PC.11						6						6
PC.10						7						7
PC.9						8						8
PB.1		16	5	5	6	9		16	5	5	6	9
PB.0		17	6	6	7	10		17	6	6	7	10
V_{SS}						11						11
V_{DD}						12						12
PA.11				7	8	13				7	8	13
PA.10				8	9	14				8	9	14
PA.9				9	10	15				9	10	15
PA.8				10	11	16				10	11	16
PC.13						17						17
PD.12						18						18
PD.11						19						19
PD.10						20						20
PG.2						21						21
PG.3						22						22
PG.4						23						23
PF.11						24						24
PF.10						25						25
PF.9						26						26
PF.8						27						27
PF.7						28						28
PF.6					12	29					12	29

	M031 Series						M032 Series					
Pin Name	**20 Pin**	**28 Pin**	**32 Pin**	**48 Pin**	**64 Pin**	**128 Pin**	**20 Pin**	**28 Pin**	**32 Pin**	**48 Pin**	**64 Pin**	**128 Pin**
PF.14					13	30					13	30
PF.5			7	11	14	31			7	11	14	31
PF.4			8	12	15	32			8	12	15	32
PH.4						33						33
PH.5						34						34
PH.6						35						35
PH.7						36						36
PF.3	12	18	9	13	16	37	11	18	9	13	16	37
PF.2	13	19	10	14	17	38	12	19	10	14	17	38
V_{SS}						39						39
V_{DD}						40						40
PE.8						41						41
PE.9						42						42
PE.10						43						43
PE.11						44						44
PE.12						45						45
PE.13						46						46
PC.8						47						47
PC.7					18	48					18	48
PC.6					19	49					19	49
PA.7				15	20	50				15	20	50
PA.6				16	21	51				16	21	51
V_{SS}					22	52					22	52
V_{DD}					23	53					23	53
PD.15					24	54					24	54
PA.5				17	25	55				17	25	55
PA.4				18	26	56				18	26	56
PA.3	14	20	11	19	27	57	13	20	11	19	27	57
PA.2	15	21	12	20	28	58	14	21	12	20	28	58
PA.1	16	22	13	21	29	59	15	22	13	21	29	59
PA.0	17	23	14	22	30	60	16	23	14	22	30	60
PF.15			15	23	31	61			15	23	31	61
PE.14						62						62
PE.15						63						63

	M031 Series						M032 Series					
Pin Name	**20 Pin**	**28 Pin**	**32 Pin**	**48 Pin**	**64 Pin**	**128 Pin**	**20 Pin**	**28 Pin**	**32 Pin**	**48 Pin**	**64 Pin**	**128 Pin**
nRESET	18	24	16	24	32	64	17	24	16	24	32	64
PF.0	19	25	17	25	33	65	18	25	17	25	33	65
ICE_DAT												
PF.1	20	26	18	26	34	66	19	26	18	26	34	66
ICE_CLK												
PD.9						67						67
PD.8						68						68
PC.5				27	35	69				27	35	69
PC.4				28	36	70				28	36	70
PC.3				29	37	71				29	37	71
PC.2				30	38	72				30	38	72
PC.1		27	19	31	39	73		27	19	31	39	73
PC.0		28	20	32	40	74		28	20	32	40	74
V_{SS}						75						75
V_{DD}						76						76
PG.9						77						77
PG.10						78						78
PG.11						79						79
PG.12						80						80
PG.13						81						81
PG.14						82						82
PG.15						83						83
PD.7						84						84
PD.6						85						85
PD.5						86						86
PD.4						87						87
PD.3					41	88					41	88
PD.2					42	89					42	89
PD.1					43	90					43	90
PD.0					44	91					44	91
PD.13						92						92
NC												
NC												
NC												

	M031 Series						M032 Series					
Pin Name	**20 Pin**	**28 Pin**	**32 Pin**	**48 Pin**	**64 Pin**	**128 Pin**	**20 Pin**	**28 Pin**	**32 Pin**	**48 Pin**	**64 Pin**	**128 Pin**
NC												
PA.12		1	21	33	45	93						
PA.13		2	22	34	46	94						
PA.14		3	23	35	47	95						
PA.15		4	24	36	48	96						
USB_VBUS							20	1	21	33	45	93
USB_D-							1	2	22	34	46	94
USB_D+							2	3	23	35	47	95
USB_V_{DD}33_CAP							3	4	24	36	48	96
PE.7						97						97
PE.6						98						98
PE.5						99						99
PE.4						100						100
PE.3						101						101
PE.2						102						102
V_{SS}						103						103
V_{DD}						104						104
PE.1						105						105
PE.0						106						106
PH.8						107						107
PH.9						108						108
PH.10						109						109
PH.11						110						110
PD.14						111						111
V_{SS}	1	5	25	37	49	112	4	5	25	37	49	112
LDO_CAP	2	6	26	38	50	113	5	6	26	38	50	113
V_{DD}	3	7	27	39	51	114	6	7	27	39	51	114
PC.14				40	52	115				40	52	115
PB.15			28	41	53	116			28	41	53	116
PB.14	4	8	29	42	54	117	7	8	29	42	54	117
PB.13	5	9	30	43	55	118	8	9	30	43	55	118
PB.12	6	10	31	44	56	119	9	10	31	44	56	119
AV_{DD}	7	11	32	45	57	120	10	11	32	45	57	120

	M031 Series						M032 Series					
Pin Name	**20 Pin**	**28 Pin**	**32 Pin**	**48 Pin**	**64 Pin**	**128 Pin**	**20 Pin**	**28 Pin**	**32 Pin**	**48 Pin**	**64 Pin**	**128 Pin**
V_{REF}					58	121					58	121
AV_{SS}				46	59	122				46	59	122
PB.11					60	123					60	123
PB.10					61	124					61	124
PB.9					62	125					62	125
PB.8					63	126					63	126
PB.7				47	64	127				47	64	127
PB.6				48	1	128				48	1	128

5.3 Pin Function Description

Group	Pin Name	Type	Description
ACMP0	ACMP0_N	A	Analog comparator 0 negative input pin.
	ACMP0_O	O	Analog comparator 0 output pin.
	ACMP0_P0	A	Analog comparator 0 positive input 0 pin.
	ACMP0_P1	A	Analog comparator 0 positive input 1 pin.
	ACMP0_P2	A	Analog comparator 0 positive input 2 pin.
	ACMP0_P3	A	Analog comparator 0 positive input 3 pin.
	ACMP0_WLAT	I	Analog comparator 0 window latch input pin
ACMP1	ACMP1_N	A	Analog comparator 1 negative input pin.
	ACMP1_O	O	Analog comparator 1 output pin.
	ACMP1_P0	A	Analog comparator 1 positive input 0 pin.
	ACMP1_P1	A	Analog comparator 1 positive input 1 pin.
	ACMP1_P2	A	Analog comparator 1 positive input 2 pin.
	ACMP1_P3	A	Analog comparator 1 positive input 3 pin.
	ACMP1_WLAT	I	Analog comparator 1 window latch input pin
ADC0	ADC0_CH0	A	ADC0 channel 0 analog input.
	ADC0_CH1	A	ADC0 channel 1 analog input.
	ADC0_CH2	A	ADC0 channel 2 analog input.
	ADC0_CH3	A	ADC0 channel 3 analog input.
	ADC0_CH4	A	ADC0 channel 4 analog input.
	ADC0_CH5	A	ADC0 channel 5 analog input.
	ADC0_CH6	A	ADC0 channel 6 analog input.
	ADC0_CH7	A	ADC0 channel 7 analog input.
	ADC0_CH8	A	ADC0 channel 8 analog input.
	ADC0_CH9	A	ADC0 channel 9 analog input.
	ADC0_CH10	A	ADC0 channel 10 analog input.
	ADC0_CH11	A	ADC0 channel 11 analog input.
	ADC0_CH12	A	ADC0 channel 12 analog input.
	ADC0_CH13	A	ADC0 channel 13 analog input.
	ADC0_CH14	A	ADC0 channel 14 analog input.
	ADC0_CH15	A	ADC0 channel 15 analog input.
	ADC0_ST	I	ADC0 external trigger input pin.
BPWM0	BPWM0_CH0	I/O	BPWM0 channel 0 output/capture input.
	BPWM0_CH1	I/O	BPWM0 channel 1 output/capture input.
	BPWM0_CH2	I/O	BPWM0 channel 2 output/capture input.

Group	Pin Name	Type	Description
	BPWM0_CH3	I/O	BPWM0 channel 3 output/capture input.
	BPWM0_CH4	I/O	BPWM0 channel 4 output/capture input.
	BPWM0_CH5	I/O	BPWM0 channel 5 output/capture input.
BPWM1	BPWM1_CH0	I/O	BPWM1 channel 0 output/capture input.
	BPWM1_CH1	I/O	BPWM1 channel 1 output/capture input.
	BPWM1_CH2	I/O	BPWM1 channel 2 output/capture input.
	BPWM1_CH3	I/O	BPWM1 channel 3 output/capture input.
	BPWM1_CH4	I/O	BPWM1 channel 4 output/capture input.
	BPWM1_CH5	I/O	BPWM1 channel 5 output/capture input.
CLKO	CLKO	O	Clock Out
EBI	EBI_AD0	I/O	EBI address/data bus bit 0.
	EBI_AD1	I/O	EBI address/data bus bit 1.
	EBI_AD2	I/O	EBI address/data bus bit 2.
	EBI_AD3	I/O	EBI address/data bus bit 3.
	EBI_AD4	I/O	EBI address/data bus bit 4.
	EBI_AD5	I/O	EBI address/data bus bit 5.
	EBI_AD6	I/O	EBI address/data bus bit 6.
	EBI_AD7	I/O	EBI address/data bus bit 7.
	EBI_AD8	I/O	EBI address/data bus bit 8.
	EBI_AD9	I/O	EBI address/data bus bit 9.
	EBI_AD10	I/O	EBI address/data bus bit 10.
	EBI_AD11	I/O	EBI address/data bus bit 11.
	EBI_AD12	I/O	EBI address/data bus bit 12.
	EBI_AD13	I/O	EBI address/data bus bit 13.
	EBI_AD14	I/O	EBI address/data bus bit 14.
	EBI_AD15	I/O	EBI address/data bus bit 15.
	EBI_ADR0	O	EBI address bus bit 0.
	EBI_ADR1	O	EBI address bus bit 1.
	EBI_ADR2	O	EBI address bus bit 2.
	EBI_ADR3	O	EBI address bus bit 3.
	EBI_ADR4	O	EBI address bus bit 4.
	EBI_ADR5	O	EBI address bus bit 5.
	EBI_ADR6	O	EBI address bus bit 6.
	EBI_ADR7	O	EBI address bus bit 7.
	EBI_ADR8	O	EBI address bus bit 8.

Group	Pin Name	Type	Description
	EBI_ADR9	O	EBI address bus bit 9.
	EBI_ADR10	O	EBI address bus bit 10.
	EBI_ADR11	O	EBI address bus bit 11.
	EBI_ADR12	O	EBI address bus bit 12.
	EBI_ADR13	O	EBI address bus bit 13.
	EBI_ADR14	O	EBI address bus bit 14.
	EBI_ADR15	O	EBI address bus bit 15.
	EBI_ADR16	O	EBI address bus bit 16.
	EBI_ADR17	O	EBI address bus bit 17.
	EBI_ADR18	O	EBI address bus bit 18.
	EBI_ADR19	O	EBI address bus bit 19.
	EBI_ALE	O	EBI address latch enable output pin.
	EBI_MCLK	O	EBI external clock output pin.
	EBI_nCS0	O	EBI chip select 0 output pin.
	EBI_nCS1	O	EBI chip select 1 output pin.
	EBI_nRD	O	EBI read enable output pin.
	EBI_nWR	O	EBI write enable output pin.
	EBI_nWRH	O	EBI high byte write enable output pin
	EBI_nWRL	O	EBI low byte write enable output pin.
GPIO	PA.x~PH.x	I/O	General purpose digital I/O pin.
I2C0	I2C0_SCL	I/O	I2C0 clock pin.
	I2C0_SDA	I/O	I2C0 data input/output pin.
	I2C0_SMBAL	O	I2C0 SMBus SMBALTER pin
	I2C0_SMBSUS	O	I2C0 SMBus SMBSUS pin (PMBus CONTROL pin)
I2C1	I2C1_SCL	I/O	I2C1 clock pin.
	I2C1_SDA	I/O	I2C1 data input/output pin.
ICE	ICE_CLK	I	Serial wired debugger clock pin **Note:** It is recommended to use 100 kΩ pull-up resistor on ICE_CLK pin
	ICE_DAT	I/O	Serial wired debugger data pin **Note:** It is recommended to use 100 kΩ pull-up resistor on ICE_DAT pin
	nRESET	I	External reset input: active LOW, with an internal pull-up. Set this pin low reset to initial state. **Note:** It is recommended to use 10 kΩ pull-up resistor and 10 uF capacitor on nRESET pin.
INT0	INT0	I	External interrupt 0 input pin.
INT1	INT1	I	External interrupt 1 input pin.
INT3	INT3	I	External interrupt 3 input pin.
INT4	INT4	I	External interrupt 4 input pin.
INT5	INT5	I	External interrupt 5 input pin.

Group	Pin Name	Type	Description
PWM0	PWM0_BRAKE0	I	PWM0 Brake 0 input pin.
	PWM0_BRAKE1	I	PWM0 Brake 1 input pin.
	PWM0_CH0	I/O	PWM0 channel 0 output/capture input.
	PWM0_CH1	I/O	PWM0 channel 1 output/capture input.
	PWM0_CH2	I/O	PWM0 channel 2 output/capture input.
	PWM0_CH3	I/O	PWM0 channel 3 output/capture input.
	PWM0_CH4	I/O	PWM0 channel 4 output/capture input.
	PWM0_CH5	I/O	PWM0 channel 5 output/capture input.
PWM1	PWM1_BRAKE0	I	PWM1 Brake 0 input pin.
	PWM1_BRAKE1	I	PWM1 Brake 1 input pin.
	PWM1_CH0	I/O	PWM1 channel 0 output/capture input.
	PWM1_CH1	I/O	PWM1 channel 1 output/capture input.
	PWM1_CH2	I/O	PWM1 channel 2 output/capture input.
	PWM1_CH3	I/O	PWM1 channel 3 output/capture input.
	PWM1_CH4	I/O	PWM1 channel 4 output/capture input.
	PWM1_CH5	I/O	PWM1 channel 5 output/capture input.
Power	V_{DD}	P	Power supply for I/O ports and LDO source for internal PLL and digital circuit.
	V_{SS}	P	Ground pin for digital circuit.
	AV_{DD}	P	Power supply for internal analog circuit.
	AV_{SS}	P	Ground pin for analog circuit.
	V_{REF}	A	ADC reference voltage input. **Note:** This pin needs to be connected with a 1uF capacitor.
	LDO_CAP	A	LDO output pin. **Note:** This pin needs to be connected with a 1uF capacitor.
QSPI0	QSPI0_CLK	I/O	Quad SPI0 serial clock pin.
	QSPI0_MISO0	I/O	Quad SPI0 MISO0 (Master In, Slave Out) pin.
	QSPI0_MISO1	I/O	Quad SPI0 MISO1 (Master In, Slave Out) pin.
	QSPI0_MOSI0	I/O	Quad SPI0 MOSI0 (Master Out, Slave In) pin.
	QSPI0_MOSI1	I/O	Quad SPI0 MOSI1 (Master Out, Slave In) pin.
	QSPI0_SS	I/O	Quad SPI0 slave select pin.
SPI0	SPI0_CLK	I/O	SPI0 serial clock pin.
	SPI0_I2SMCLK	I/O	SPI0 I^2S master clock output pin
	SPI0_MISO	I/O	SPI0 MISO (Master In, Slave Out) pin.
	SPI0_MOSI	I/O	SPI0 MOSI (Master Out, Slave In) pin.
	SPI0_SS	I/O	SPI0 slave select pin.
TM0	TM0	I/O	Timer0 event counter input/toggle output pin.

Group	Pin Name	Type	Description
	TM0_EXT	I/O	Timer0 external capture input/toggle output pin.
TM1	TM1	I/O	Timer1 event counter input/toggle output pin.
	TM1_EXT	I/O	Timer1 external capture input/toggle output pin.
TM2	TM2	I/O	Timer2 event counter input/toggle output pin.
	TM2_EXT	I/O	Timer2 external capture input/toggle output pin.
TM3	TM3	I/O	Timer3 event counter input/toggle output pin.
	TM3_EXT	I/O	Timer3 external capture input/toggle output pin.
UART0	UART0_RXD	I	UART0 data receiver input pin.
	UART0_TXD	O	UART0 data transmitter output pin.
	UART0_nCTS	I	UART0 clear to Send input pin.
	UART0_nRTS	O	UART0 request to Send output pin.
UART1	UART1_RXD	I	UART1 data receiver input pin.
	UART1_TXD	O	UART1 data transmitter output pin.
	UART1_nCTS	I	UART1 clear to Send input pin.
	UART1_nRTS	O	UART1 request to Send output pin.
UART2	UART2_RXD	I	UART2 data receiver input pin.
	UART2_TXD	O	UART2 data transmitter output pin.
	UART2_nCTS	I	UART2 clear to Send input pin.
	UART2_nRTS	O	UART2 request to Send output pin.
UART3	UART3_RXD	I	UART3 data receiver input pin.
	UART3_TXD	O	UART3 data transmitter output pin.
	UART3_nCTS	I	UART3 clear to Send input pin.
	UART3_nRTS	O	UART3 request to Send output pin.
UART4	UART4_RXD	I	UART4 data receiver input pin.
	UART4_TXD	O	UART4 data transmitter output pin.
	UART4_nCTS	I	UART4 clear to Send input pin.
	UART4_nRTS	O	UART4 request to Send output pin.
UART5	UART5_RXD	I	UART5 data receiver input pin.
	UART5_TXD	O	UART5 data transmitter output pin.
	UART5_nCTS	I	UART5 clear to Send input pin.
	UART5_nRTS	O	UART5 request to Send output pin.
UART6	UART6_RXD	I	UART6 data receiver input pin.
	UART6_TXD	O	UART6 data transmitter output pin.
	UART6_nCTS	I	UART6 clear to Send input pin.
	UART6_nRTS	O	UART6 request to Send output pin.

Group	Pin Name	Type	Description
UART7	UART7_RXD	I	UART7 data receiver input pin.
	UART7_TXD	O	UART7 data transmitter output pin.
	UART7_nCTS	I	UART7 clear to Send input pin.
	UART7_nRTS	O	UART7 request to Send output pin.
USB	USB_VBUS	P	Power supply from USB host or HUB.
	USB_D-	A	USB differential signal D-.
	USB_D+	A	USB differential signal D+.
	USB_V_{DD}33_CAP	A	Internal power regulator output 3.3V decoupling pin.
USCI0	USCI0_CLK	I/O	USCI0 clock pin.
	USCI0_CTL0	I/O	USCI0 control 0 pin.
	USCI0_CTL1	I/O	USCI0 control 1 pin.
	USCI0_DAT0	I/O	USCI0 data 0 pin.
	USCI0_DAT1	I/O	USCI0 data 1 pin.
USCI1	USCI1_CLK	I/O	USCI1 clock pin.
	USCI1_CTL0	I/O	USCI1 control 0 pin.
	USCI1_CTL1	I/O	USCI1 control 1 pin.
	USCI1_DAT0	I/O	USCI1 data 0 pin.
	USCI1_DAT1	I/O	USCI1 data 1 pin.
X32	X32_IN	I	External 32.768 kHz crystal input pin.
	X32_OUT	O	External 32.768 kHz crystal output pin.
XT1	XT1_IN	I	External 4~24 MHz (high speed) crystal input pin.
	XT1_OUT	O	External 4~24 MHz (high speed) crystal output pin.

6 UTILITIES

6.1 Programmer and Debugger

Nu-Link	Basic full speed USB2.0 hardware debugger/programmer
Nu-Link-Pro	Advance hardware debugger/programmer with programming counter
Nu-Link 2.0	Advance high speed USB2.0 hardware debugger/programmer with multi-functions
Nu-Link-Gang	Off-line hardware programmer supports up to four chips programming for mass-production
ISP	In system programming, a software programming tool support UART/USB
ICP	In Chip Programming, a software programming tool support Nu-Link programmer

6.2 Development Environment

Programming IDE	Keil MDK, IAR, NuEclipse(GCC)
Software Package	Board Support Package(BSP), Sample Code,
Development IDE	NuTool Pin-View, NuTool-PinView, NuTool-ClockConfig, NuConsole
RTOS	Mbed, FreeRTOS, Amazon FreeRTOS, Ali-OS
HMI	Support emWin with font create tool and easy GUI builder
Programming IDE	Keil MDK, IAR, NuEclipse(GCC)

6.3 Development Board

EVB NuMaker	**Part Number**	**Feature**
NK-M031TB	M031FB0AE, M031EB0AE, M031TB0AE	Support Expand Connector, Arduino Uno Interface
NK-M031TC	M031FC1AE, M031EC1AE, M031TC1AE	
NK-M031SD	M031LC2AE, M031SC2AE, M031TD2AE M031LD2AE, M031SD2AE	
NK-M031SE	M031LE3AE, M031SE3AE,	
NK-M032SE	M032LE3AE, M032SE3AE	
NK-M031KG	M031LG6AE, M031SG6AE, M031KG6AE, M031LG8AE, M031SG8AE, M031KG8AE	
NK-M032KG	M032LG6AE, M032SG6AE, M032KG6AE, M032LG8AE, M032SG8AE, M032KG8AE	
NK-M031KI	M031SIAAE, M031KIAAE	
NK-M032KI	M032SIAAE, M032KIAAE	

7 PACKAGE DIMENSIONS

7.1 TSSOP 20-Pin (4.4x6.5x0.9 mm)

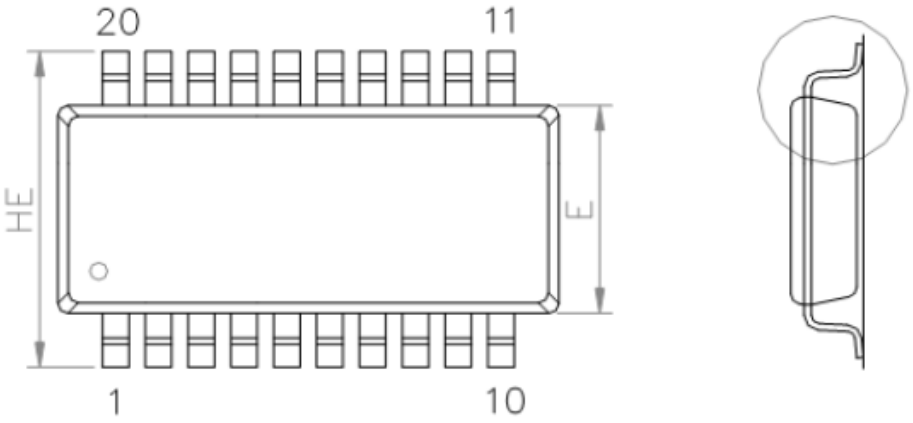

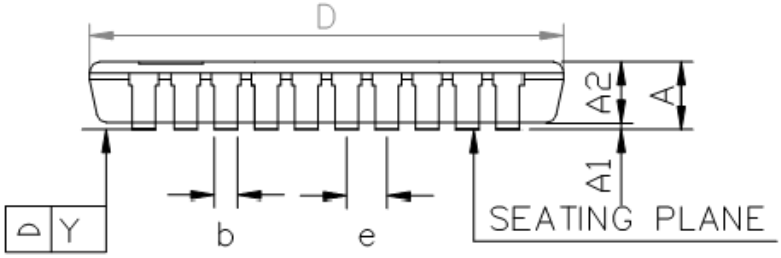

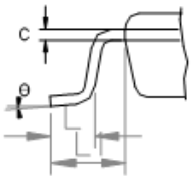

SYMBOL	DIMENSION (MM)			DIMENSION (INCH)		
	MIN.	NOM.	MAX.	MIN.	NOM.	MAX.
A	-	-	1.20	-	-	0.047
A1	0.05	-	0.15	0.002	-	0.006
A2	0.80	0.90	1.05	0.031	0.035	0.041
E	4.30	4.40	4.50	0.169	0.173	0.177
HE	6.40 BSC			0.252 BSC		
D	6.40	6.50	6.60	0.252	0.256	0.260
L	0.50	0.60	0.75	0.020	0.024	0.030
L1	1.00 REF			0.039 REF		
b	0.19	-	0.30	0.007	-	0.012
e	0.65 BSC			0.026 BSC		
c	0.09	-	0.20	0.004	-	0.008
θ	0°	-	8°	0°	-	8°
Y	0.10 BASIC			0.004 BASIC		

7.2 TSSOP 28-Pin (4.4x9.7x1.0 mm)

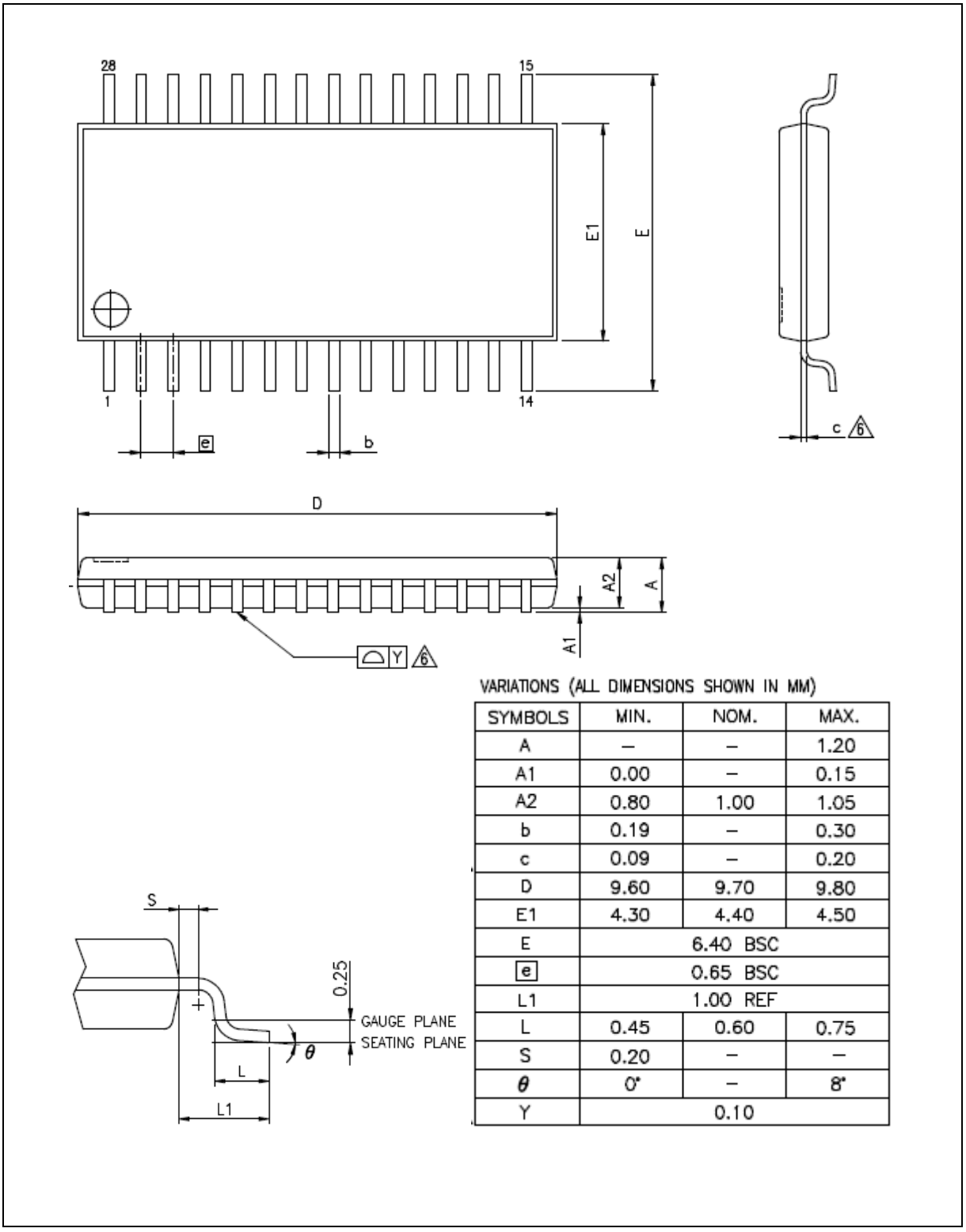

VARIATIONS (ALL DIMENSIONS SHOWN IN MM)

SYMBOLS	MIN.	NOM.	MAX.
A	–	–	1.20
A1	0.00	–	0.15
A2	0.80	1.00	1.05
b	0.19	–	0.30
c	0.09	–	0.20
D	9.60	9.70	9.80
E1	4.30	4.40	4.50
E	6.40 BSC		
e	0.65 BSC		
L1	1.00 REF		
L	0.45	0.60	0.75
S	0.20	–	–
θ	0°	–	8°
Y	0.10		

7.3 QFN 33-pin (4X4x0.8 mm Pitch:0.40 mm)

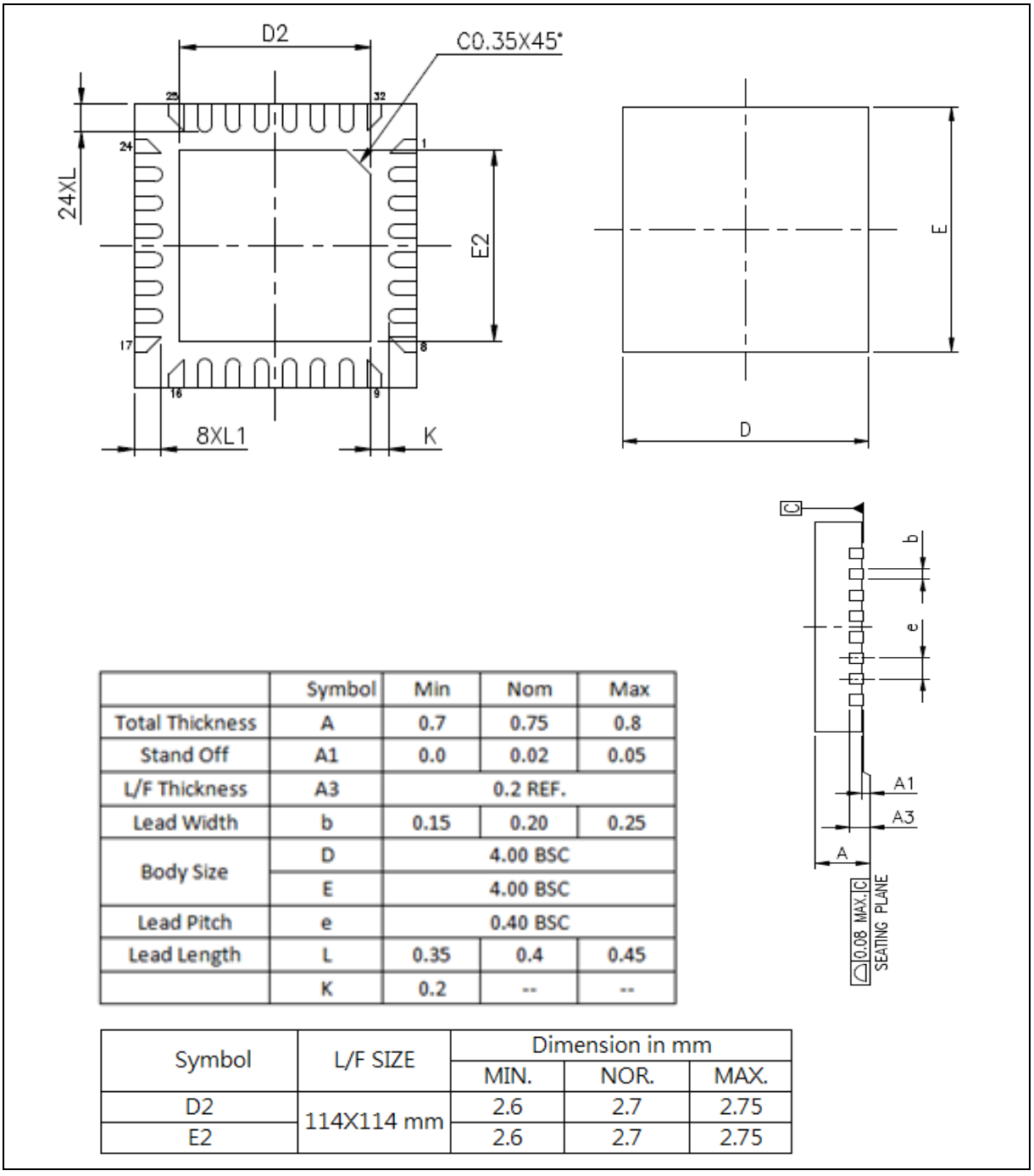

	Symbol	Min	Nom	Max
Total Thickness	A	0.7	0.75	0.8
Stand Off	A1	0.0	0.02	0.05
L/F Thickness	A3		0.2 REF.	
Lead Width	b	0.15	0.20	0.25
Body Size	D		4.00 BSC	
	E		4.00 BSC	
Lead Pitch	e		0.40 BSC	
Lead Length	L	0.35	0.4	0.45
	K	0.2	--	--

Symbol	L/F SIZE	Dimension in mm		
		MIN.	NOR.	MAX.
D2	114X114 mm	2.6	2.7	2.75
E2		2.6	2.7	2.75

7.4 LQFP 48-pin (7x7x1.4 mm Footprint 2.0mm)

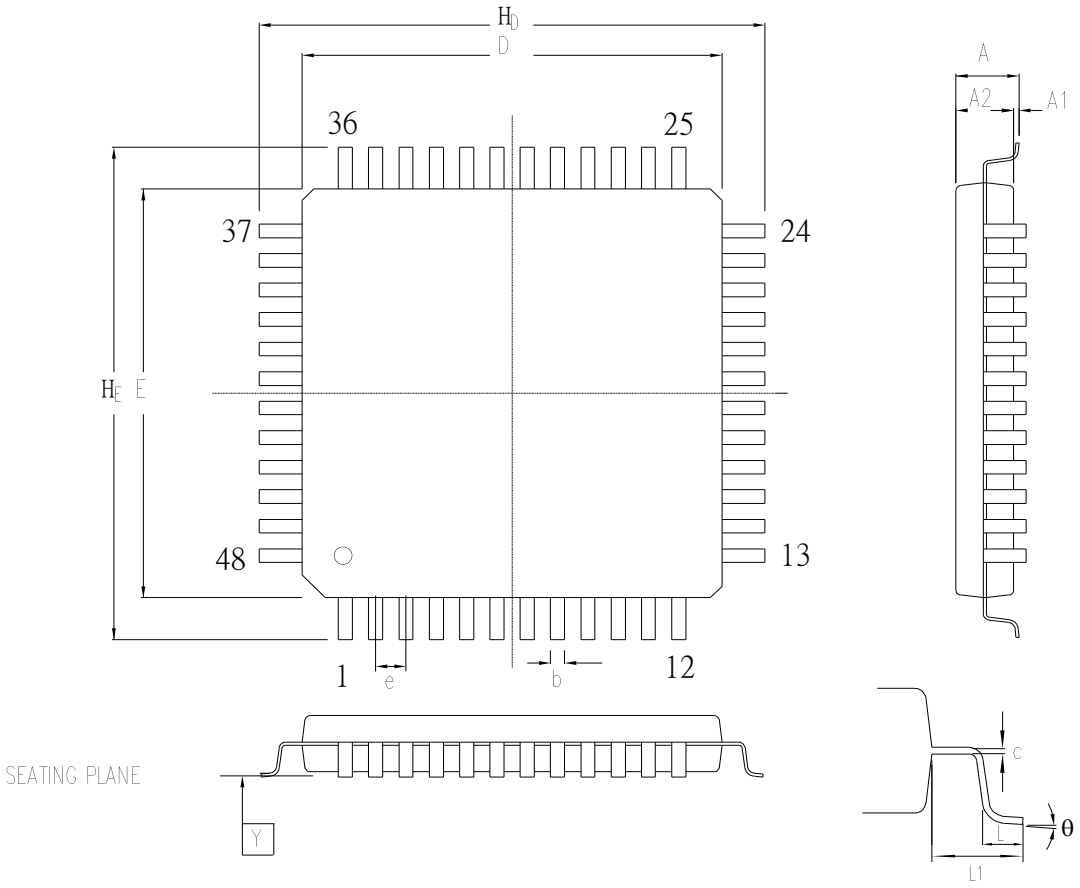

Controlling dimension : Millimeters

Symbol	Dimension in inch			Dimension in mm		
	Min	Nom	Max	Min	Nom	Max
A	—	—	—	—	—	—
A_1	0.002	0.004	0.006	0.05	0.10	0.15
A_2	0.053	0.055	0.057	1.35	1.40	1.45
b	0.006	0.008	0.010	0.15	0.20	0.25
c	0.004	0.006	0.008	0.10	0.15	0.20
D	0.272	0.276	0.280	6.90	7.00	7.10
E	0.272	0.276	0.280	6.90	7.00	7.10
e	0.014	0.020	0.026	0.35	0.50	0.65
H_D	0.350	0.354	0.358	8.90	9.00	9.10
H_E	0.350	0.354	0.358	8.90	9.00	9.10
L	0.018	0.024	0.030	0.45	0.60	0.75
L_1	—	0.039	—	—	1.00	—
Y	—	—	0.004	—	—	0.10
θ	0°	—	7°	0°	—	7°

7.5 LQFP 64-pin (7x7x1.4 mm footprint 2.0 mm)

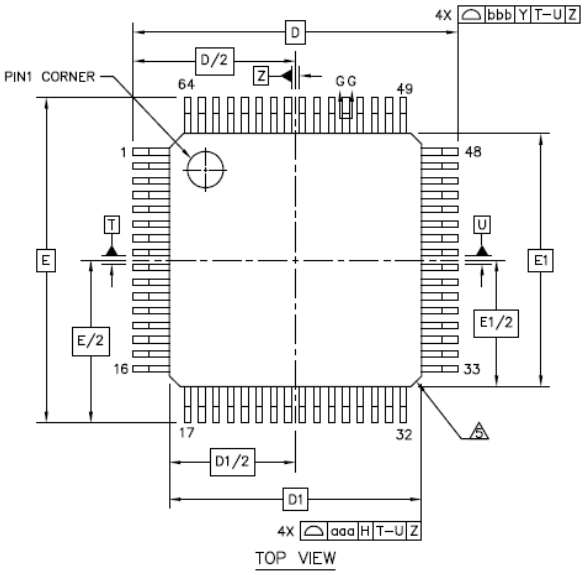

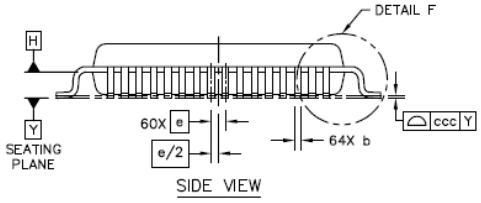

		SYMBOL	MIN	NOM	MAX
TOTAL THICKNESS		A	---	---	1.6
STAND OFF		A1	0.05	---	0.15
MOLD THICKNESS		A2	1.35	1.4	1.45
LEAD WIDTH(PLATING)		b	0.13	0.18	0.23
LEAD WIDTH		b1	0.13	0.16	0.19
L/F THICKNESS(PLATING)		c	0.09	---	0.2
L/F THICKNESS		c1	0.09	---	0.16
	X	D	9 BSC		
	Y	E	9 BSC		
BODY SIZE	X	D1	7 BSC		
	Y	E1	7 BSC		
LEAD PITCH		e	0.4 BSC		
		L	0.45	0.6	0.75
FOOTPRINT		L1	1 REF		
		θ	0°	3.5°	7°
		θ1	0°	---	---
		θ2	11°	12°	13°
		θ3	11°	12°	13°
		R1	0.08	---	---
		R2	0.08	---	0.2
		S	0.2	---	---
PACKAGE EDGE TOLERANCE		aaa	0.2		
LEAD EDGE TOLERANCE		bbb	0.2		
COPLANARITY		ccc	0.08		
LEAD OFFSET		ddd	0.07		
MOLD FLATNESS		eee	0.05		

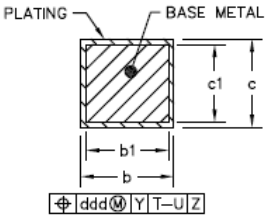

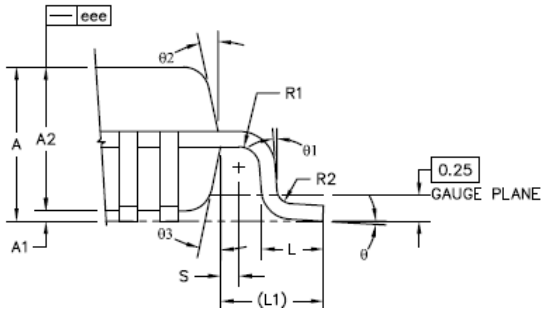

7.6 LQFP 128L (14x14x1.4 mm Footprint 2.0 mm)

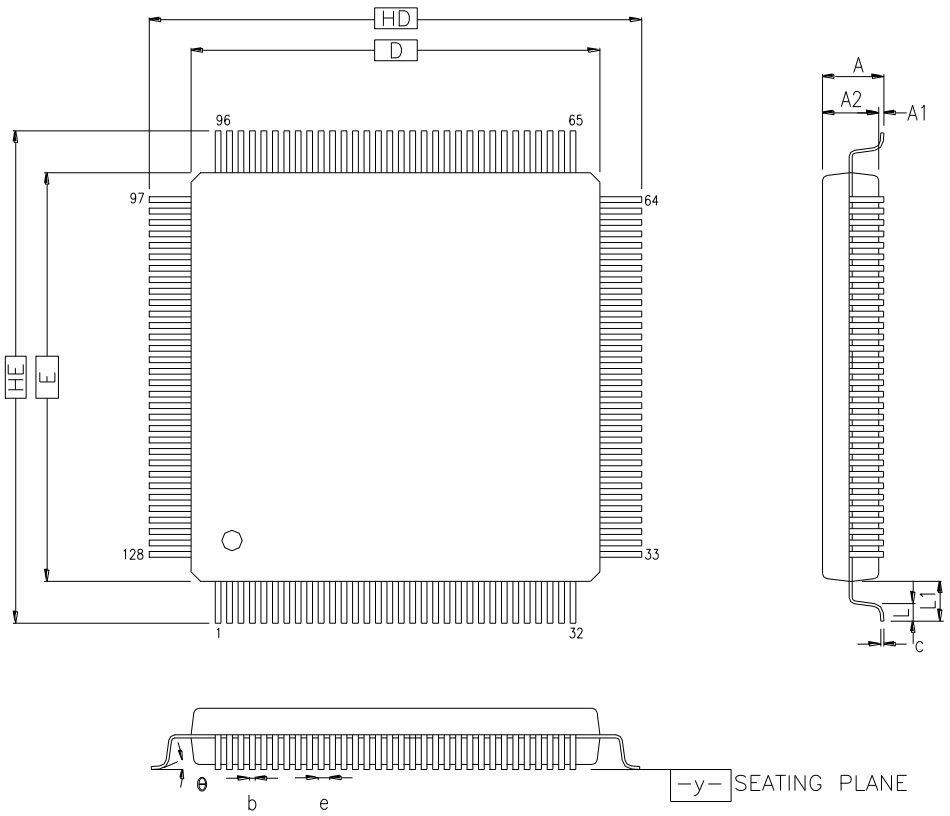

COTROL DIMENSIONS ARE IN MILLIMETERS.

SYMBOL	MILLIMETER			INCH		
	MIN.	NOM.	MAX.	MIN.	NOM.	MAX.
A	—	—	1.60	—	—	0.063
A1	0.05	—	0.15	0.002	—	0.006
A2	1.35	1.40	1.45	0.053	0.055	0.057
HD	16.00 BSC.			0.630 BSC.		
D	14.00 BSC.			0.551 BSC.		
HE	16.00 BSC.			0.630 BSC.		
E	14.00 BSC.			0.551 BSC.		
b	0.13	0.16	0.23	0.005	0.006	0.009
e	0.40 BSC.			0.016 BSC.		
θ	0°	3.5°	7°	0°	3.5°	7°
c	0.09	—	0.20	0.004	—	0.008
L	0.45	0.60	0.75	0.018	0.024	0.030
L_1	1.00 REF			0.039 REF		
y	–	–	0.1	–	–	0.004

8 REVISION HISTORY

Date	Revision	Description
2019.01.03	1.00	Initial version.
2022.07.20	1.10	Add 48/64/128 package part

Important Notice

Nuvoton Products are neither intended nor warranted for usage in systems or equipment, any malfunction or failure of which may cause loss of human life, bodily injury or severe property damage. Such applications are deemed, "Insecure Usage".

Insecure usage includes, but is not limited to: equipment for surgical implementation, atomic energy control instruments, airplane or spaceship instruments, the control or operation of dynamic, brake or safety systems designed for vehicular use, traffic signal instruments, all types of safety devices, and other applications intended to support or sustain life.

All Insecure Usage shall be made at customer's risk, and in the event that third parties lay claims to Nuvoton as a result of customer's Insecure Usage, customer shall indemnify the damages and liabilities thus incurred by Nuvoton.

Please note that all data and specifications are subject to change without notice.
All the trademarks of products and companies mentioned in this datasheet belong to their respective owners.