PIANO SWITCHES (HALF PITCH) CHP

RoHS compliant

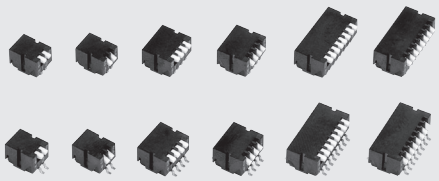

FEATURES

- RoHS compliant
- High-reliability
- Resin material is UL Recognized 94V-0

APPLICATIONS

- Communication devices, AV • OA equipment and computer peripherals

INTERNAL STRUCTURE

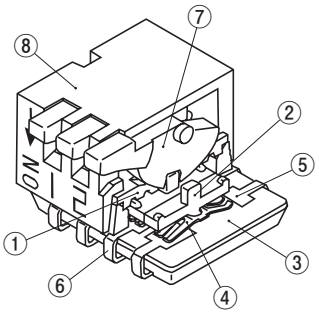

Part name		Material
①	Cover	Polyphenylenesulfide
②	Slider	Polyamide
③	Housing	Polyphenylenesulfide
④	Slider contact	Stainless steel, Gold-plated
⑤	Fixed contact	Copper alloy, Gold-plated
⑥	Terminal pin	
⑦	Piano lever	Polyamide
⑧	Piano cover	Polyphenylenesulphide

PART NUMBER DESIGNATION

C H P - 0 4 0 T B

Series name

No. of bits
02 : 2 bits
04 : 4 bits
08 : 8 bits

ON direction
0 : Upper
1 : Lower

Shape of terminal
A : J-hook
B : Gull wing

Form of packaging
T : Taping (Reel)
Blank : Bulk in plastic bag

※ Please refer to the LIST OF PART NUMBERS when placing orders.

CHP
PIANO SWITCHES (HALF PITCH)

LIST OF PART NUMBERS

No. of bits	ON direction	Form of packaging	Shape of terminals		Packaging quantity
			A (J-hook)	B (Gull wing)	
2	Upper	Taping	CHP-020TA	CHP-020TB	500 pcs./reel
		Plastic bag	CHP-020A	CHP-020B	50 pcs./pack
	Lower	Taping	CHP-021TA	CHP-021TB	500 pcs./reel
		Plastic bag	CHP-021A	CHP-021B	50 pcs./pack
4	Upper	Taping	CHP-040TA	CHP-040TB	500 pcs./reel
		Plastic bag	CHP-040A	CHP-040B	50 pcs./pack
	Lower	Taping	CHP-041TA	CHP-041TB	500 pcs./reel
		Plastic bag	CHP-041A	CHP-041B	50 pcs./pack
8	Upper	Taping	CHP-080TA	CHP-080TB	500 pcs./reel
		Plastic bag	CHP-080A	CHP-080B	50 pcs./pack
	Lower	Taping	CHP-081TA	CHP-081TB	500 pcs./reel
		Plastic bag	CHP-081A	CHP-081B	50 pcs./pack

※ Verify the above part numbers when placing orders.
Taping version can be supplied only in reel units.

STANDARD SPECIFICATIONS

Operating temp. range	− 40 ~ 85 °C
Storage temp. range	
Sealing	Non-washable
Net weight	Approx. 0.16 g (CHP-02), Approx. 0.25 g (CHP-04), Approx. 0.43 g (CHP-08)

ELECTRICAL CHARACTERISTICS

Contact rating Non-switching Switching Minimum	DC50 V 100 mA DC6 V, 100 mA DC24 V, 25 mA DC20 mV 1 µA
Contact resistance	50 mΩ maximum
Insulation resistance	1000 MΩ (DC100 V) minimum
Dielectric strength	AC500 V, 60 s

MECHANICAL CHARACTERISTICS

Operation angle	22 °
Operating force	5 N {0.51 kgf} maximum
Stop strength	10 N {1.02 kgf} 60 s
Solderability	245 ± 3 °C, 2 ~ 3 s
Soldering heat	Reflow : 255 °C (Peak temperature) Please refer to the profile below)
	Manual soldering : 350 ± 10 °C, 3 ~ 4 s
Shear (Adhesion)	5 N {0.51 kgf} 10 s
Substrate bending	Width 90 mm, bend 3 mm, 5 s, 1 time
Pull-off strength	5 N {0.51 kgf} 10 s

{ } : Reference only

ENVIRONMENTAL CHARACTERISTICS

Vibration	(Amplitude) 1.5 mm or (Acceleration) 98 m/s^2, 10-500 Hz, 3 directions for 10 cycles each
Shock	490 m/s^2, 11 ms 6 directions for 3 times each
Load life	Continuous load 1000 cycles, DC6 ± 0.5 V, 100 ± 10 mA
Humidity	−10 ~ 65 °C, Relative humidity 0 ~ 96 %, 24 h for 10 cycles
High temp. exposure	85 °C, 96 h
Low temp. exposure	−40 °C, 96 h
Thermal shock	−40 (0.5 h) ~ 85 °C (0.5 h), 5 cycles

〈Reflow profile for soldering heat evaluation〉

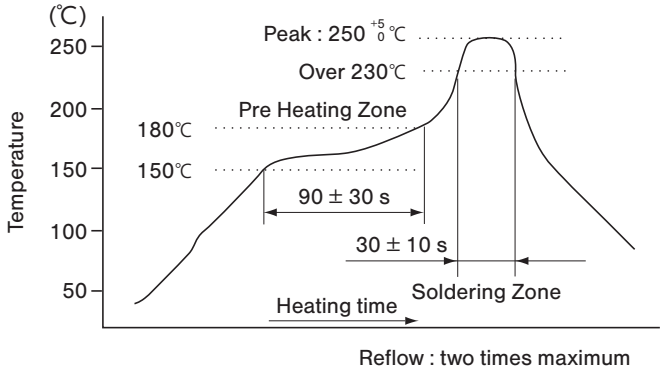

OUTLINE DIMENSIONS

Unless otherwise specified, tolerance : ± 0.3 (Unit : mm)

CHP-020A

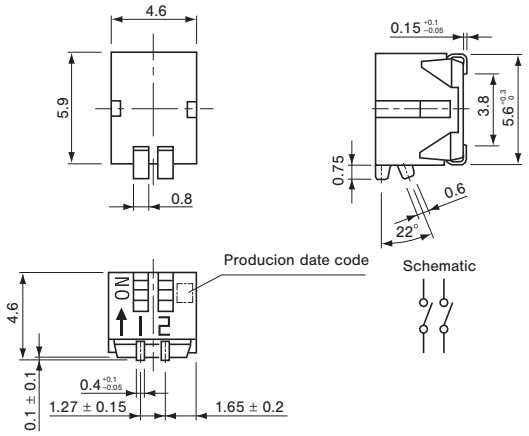

CHP-021A

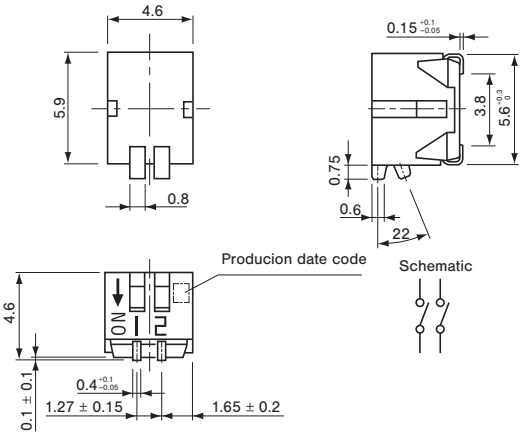

CHP-020B

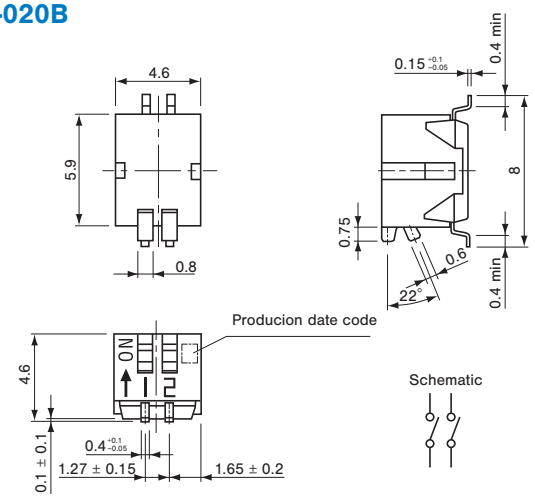

CHP-021B

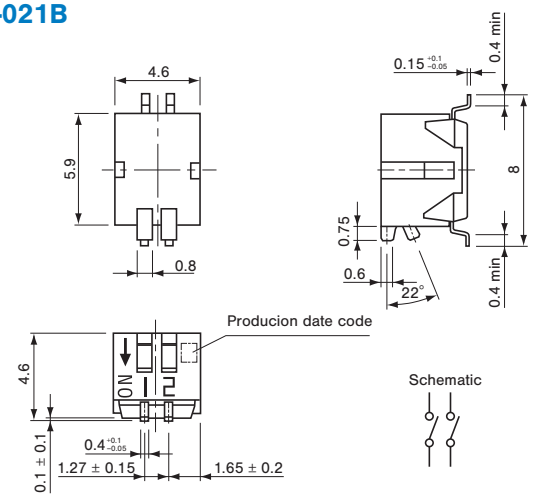

CHP
PIANO SWITCHES (HALF PITCH)

OUTLINE DIMENSIONS

Unless otherwise specified, tolerance : ± 0.3 (Unit : mm)

CHP-040A

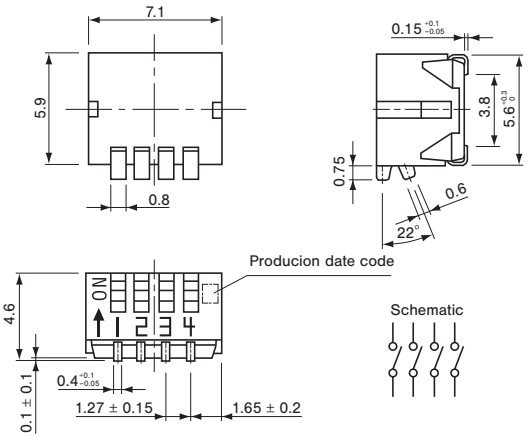

CHP-041A

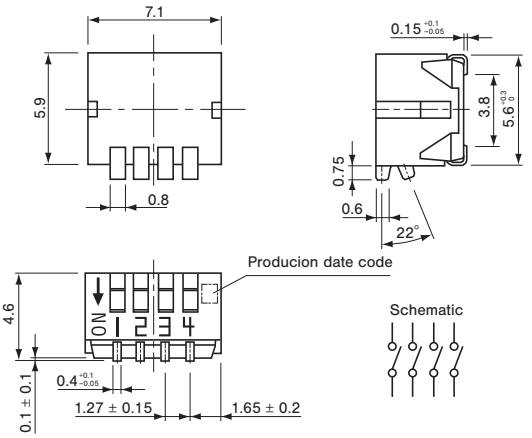

CHP-040B

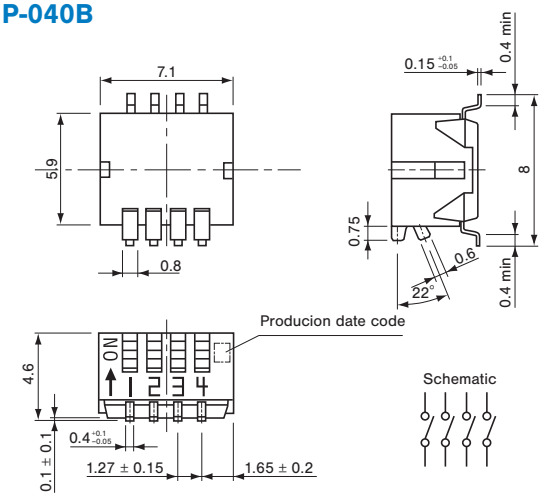

CHP-041B

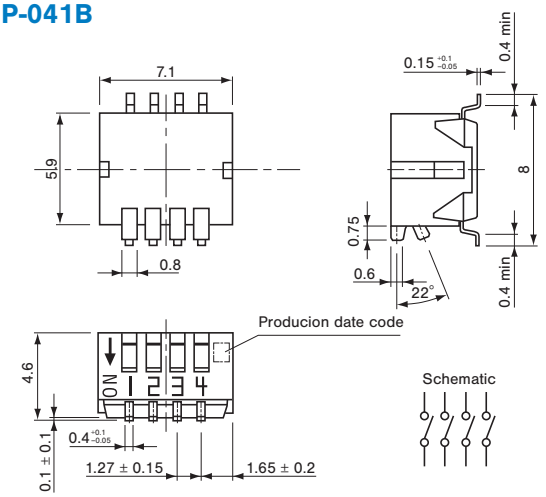

CHP-080A

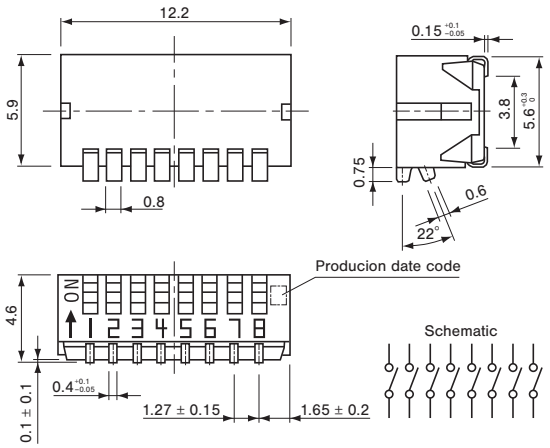

CHP-081A

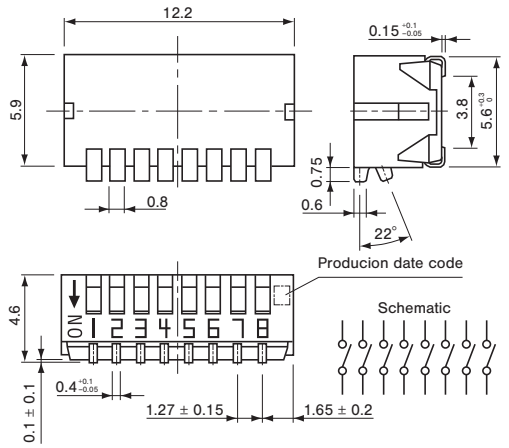

OUTLINE DIMENSIONS

Unless otherwise specified, tolerance : ± 0.3 (Unit : mm)

CHP-080B

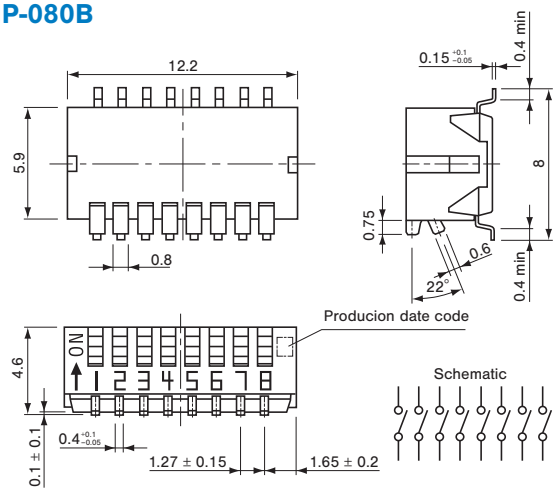

CHP-081B

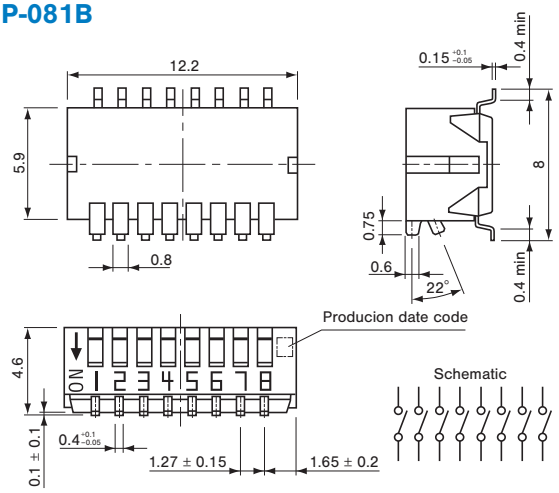

RECOMMENDED P.C.B. PAD DIMENSIONS

2 bits A type

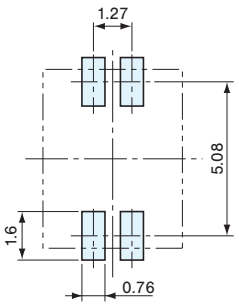

B type

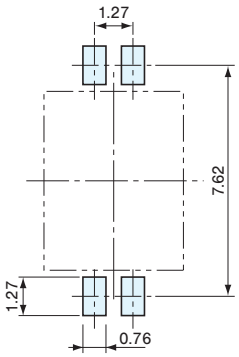

4 bits A type

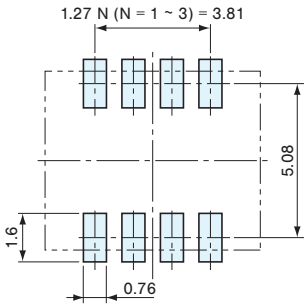

B type

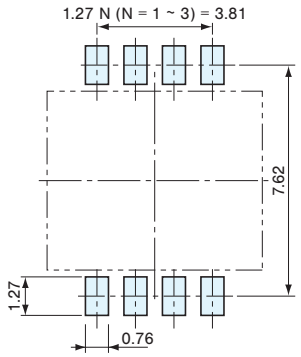

8 bits A type

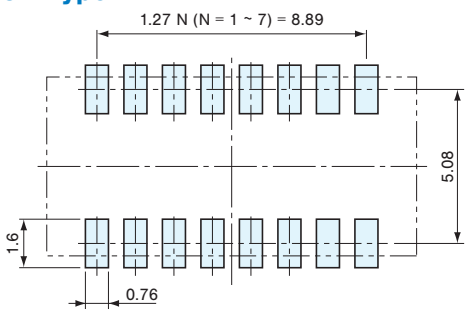

B type

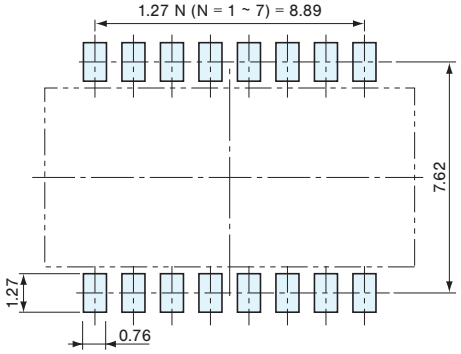

CHP
PIANO SWITCHES (HALF PITCH)

■ PACKAGING SPECIFICATIONS

<Taping packaging specifications>

- Taping version is packaged in 500 pcs. per reel. Orders will be accepted for units of 500 pcs., i.e., 500, 1000, 1500 pcs., etc.
- Taping version is boxed with two reels.

Maximum number of consecutive missing pieces=2
Leader length and reel dimension are shown in the diagrams below:

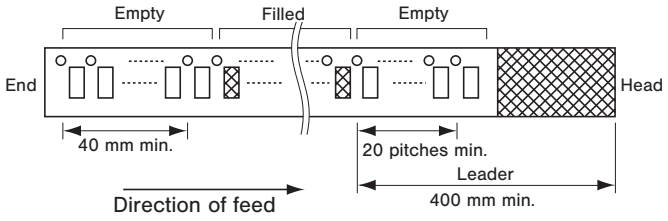

● Reel dimensions

(Unit: mm)

(Conforms to JIS C 0806-3)
(In accordance with EIAJ ET-7200A)

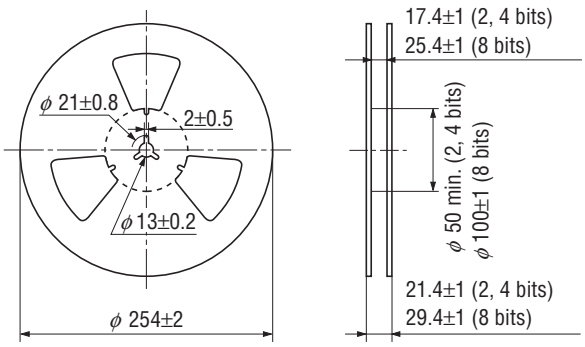

● 2 bits

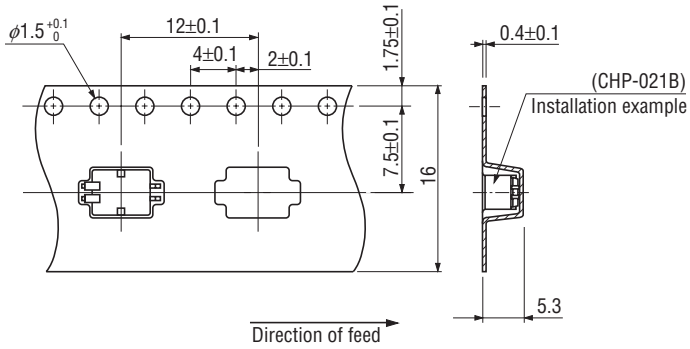

● 4 bits

(Unit : mm)

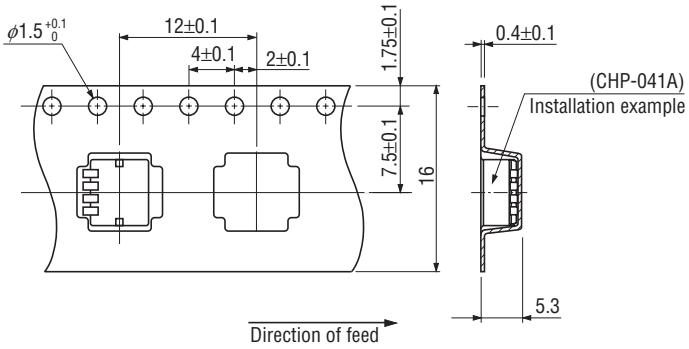

● 8 bits

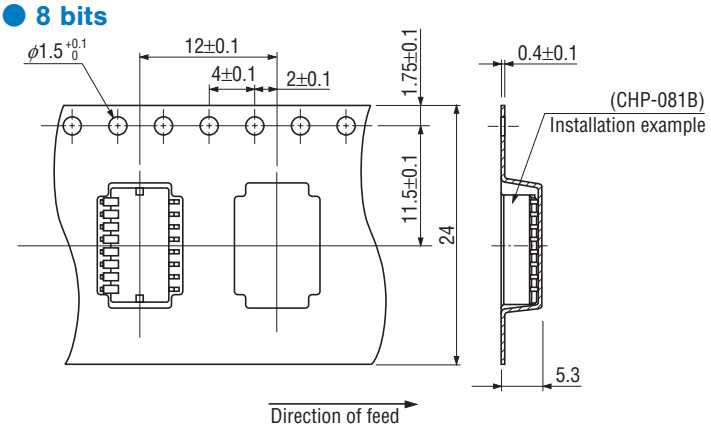

〈Bulk pack specifications〉

- The smallest unit of bulk pack in a plastic bag is 10 pcs. per pack. Orders will be accepted for unit of minimum 10 pcs., i.e., 10, 20, 30 pcs., etc.
- Boxing of bulk in a plastic bag is performed with 50 pcs. (Standard 100 pcs.) per box.