MPQ5068

28V, 8A, 7mΩ, $R_{DS(ON)}$ Hot-Swap Protection Device with Current Monitoring, AEC-Q100 Qualified

DESCRIPTION

The MPQ5068 is a hot-swap protection device designed to protect circuitry on its output from transients on its input. It also protects its input from undesired shorts and transients coming from its output.

During start-up, the slew rate at the output limits the inrush current. An external capacitor connected to the SS pin controls the slew rate.

The maximum output load is current-limited using a sense FET topology, and a low-power resistor from the ISET pin to ground controls the magnitude of the current limit. An internal charge pump drives the gate of the power device, allowing for a power FET with a very low on resistance of 7mΩ. The MPQ5068 includes an IMON option to produce a voltage proportional to the current through the power device, which is set by a resistor from the IMON pin to ground.

The MPQ5068's fault protections include current-limit protection, thermal shutdown, and damaged-MOSFET detection. Both the current limit and thermal shutdown offer configurable auto-retry and latch-off mode. The device also features under-voltage protection.

The MPQ5068 is available in a QFN-22 (3mmx5mm) package and is AEC-Q100 qualified.

FEATURES

- Integrated 7mΩ Power MOSFET
- Adjustable Current Limit (5A to 15A)
- Output Current Measurement
- ±10% Current Monitor Accuracy
- Fast Response (200ns) for Short Protection
- PG Detector and FLTB Indication
- PG Asserts Low when V_{IN} = 0V
- Damaged MOSFET Detection
- External Soft Start
- Under-Voltage Lockout
- Thermal Protection
- Available in a QFN-22 (3mmx5mm) Package
- Available in AEC-Q100 Grade 1

APPLICATIONS

- Automotive Infotainment
- Automotive Clusters
- Advanced Driver Assistance Systems
- Automotive Systems

All MPS parts are lead-free, halogen-free, and adhere to the RoHS directive. For MPS green status, please visit the MPS website under Quality Assurance. "MPS", the MPS logo, and "Simple, Easy Solutions" are trademarks of Monolithic Power Systems, Inc. or its subsidiaries.

TYPICAL APPLICATION

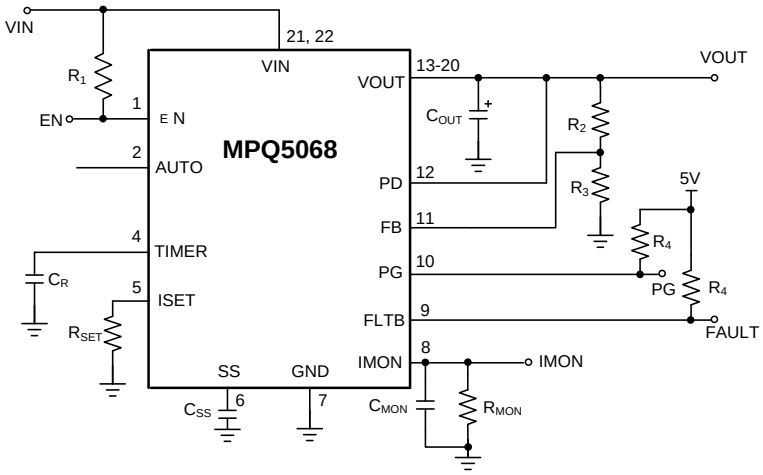

MPS Proprietary Information. Patent Protected. Unauthorized Photocopy and Duplication Prohibited.
© 2020 MPS. All Rights Reserved.

ORDERING INFORMATION

Part Number*	Package	Top Marking	MSL Rating**
MPQ5068GQV-AEC1–Z	QFN-22 (3mmx5mm)	*See Below*	1

* For Tape & Reel, add suffix –Z (e.g. MPQ5068GQV-AEC1–Z).

** Moisture Sensitivity Level Rating

TOP MARKING

MPYW
5068
LLL

MP: MPS prefix
Y: Year code
W: Week code
5068: First four digits of the part number
LLL: Lot number

PACKAGE REFERENCE

TOP VIEW

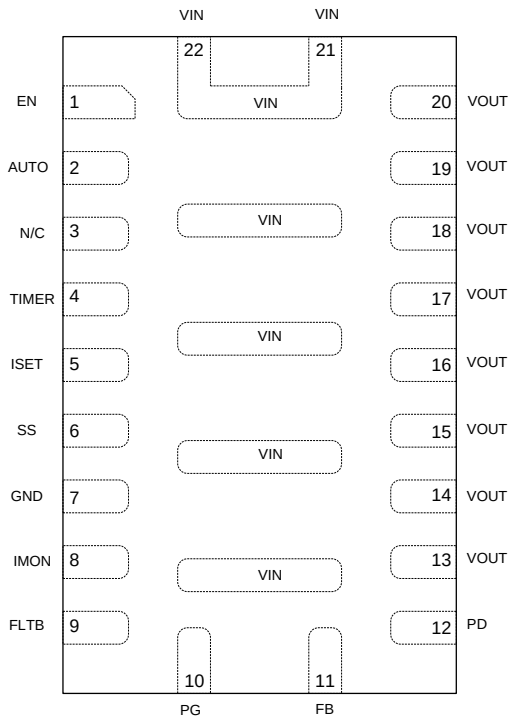

QFN-22 (3mmx5mm)

MPS Proprietary Information. Patent Protected. Unauthorized Photocopy and Duplication Prohibited.
© 2020 MPS. All Rights Reserved.

PIN FUNCTIONS

Pin #	Name	Description
1	EN	**Enable input.** Pull the EN pin above its threshold (1.8V) to enable the chip. Pull EN below its threshold (1.6V) to shut down the chip.
2	AUTO	**Auto-reset enable.** Float the AUTO pin or pull it above 2.5V to enable auto-reset after a fault is removed. Ground AUTO to force the MPQ5068 to latch off if a fault occurs.
3	NC	**Not connected.** Float this pin.
4	TIMER	**Timer set.** An external capacitor sets the hot-plug insertion time delay, fault timeout period, and restart time.
5	ISET	**Current limit set.** Place a resistor from this pin to ground to set the value of the current limit.
6	SS	**Soft start.** An external capacitor connected to the SS pin sets the soft-start time. The internal circuit controls the output voltage slew rate during start-up. Float this pin to set the soft-start time at a minimum of 1ms.
7	GND	**Ground.**
8	IMON	**Output current monitor.** Provide a voltage proportional to the current flowing through the power device. Place a resistor to ground to set the gain. Floating this pin is not recommended.
9	FLTB	**Fault bar.** This is an open-drain output that drives to ground if an over-current fault or thermal shutdown occurs. Pull the FLTB pin up to an external power supply through a 100kΩ resistor.
10	PG	**Power good.** This is an open-drain output. Pull PG up to an external power supply through a resistor. When PG is high, it indicates power good. When PG is low, it indicates that the output is outside the under-voltage lockout (UVLO) window. PG starts to work when the pull-up supply is enabled, even if VIN and EN are still disabled.
11	FB	**Feedback.** An external resistor divider from the output sets the output voltage where the PG pin switches. The rising threshold is 0.6V, with a 60mV hysteresis.
12	PD	**Output discharge.** Connect the PD pin to the output to provide a 500Ω load to discharge the output when V_{IN} is below its UVLO threshold or the EN pin is within 0.6V of the rising threshold. Floating PD disables this function.
13–20	VOUT	**Output.** The output voltage is controlled by the IC.
21, 22 (exposed pads)	VIN	**Input power supply.**

MPS Proprietary Information. Patent Protected. Unauthorized Photocopy and Duplication Prohibited.
© 2020 MPS. All Rights Reserved.

ABSOLUTE MAXIMUM RATINGS (1)

V_{IN} .....-0.3V to +36V
VOUT, PD.....-0.3V to +30V
All other pins .....-0.3V to +6.5V
Continuous power dissipation (T_A = 25°C) (2)
…… 2.7W
Power dissipation (T_A = 25°C, 10ms single pulse)
….. ..... 215W
Maximum current (T_A = 25°C)…… 25A
Junction temperature .....150°C
Lead temperature .....260°C
Storage temperature ..... -65°C to +150°C

Electrostatic Discharge (ESD) Ratings

Human body model (HBM) .....±2kV
Charged device model (CDM) ..... ±750V

Recommended Operating Conditions

Input voltage operating range ..... 6V to 28V
Operating junction temp (T_J). ... -40°C to +125°C

Thermal Resistance θ_{JA} θ_{JC}

QFN-22 (3mmx5mm)		
JESD51-7 (3)...	46.....	10.....°C/W
EV5068-QV-00A (4).....	30.....	2.....°C/W

Notes:

1) Absolute maximum ratings are rated under room temperature unless otherwise noted. Exceeding these ratings may damage the device.
2) The maximum allowable power dissipation is a function of the maximum junction temperature, T_J (MAX), the junction-to-ambient thermal resistance, θ_{JA}, and the ambient temperature, T_A. The maximum allowable continuous power dissipation at any ambient temperature is calculated by P_D (MAX) = (T_J (MAX) - T_A) / θ_{JA}. Exceeding the maximum allowable power dissipation will cause excessive die temperature, and the regulator will go into thermal shutdown. Internal thermal shutdown circuitry protects the device from permanent damage.
3) Measured on JESD51-7, 4-layer PCB.
4) Measured on an MPS standard EVB, 8.5cmx8.5cm, 2-layer PCB.

MPS Proprietary Information. Patent Protected. Unauthorized Photocopy and Duplication Prohibited.
© 2020 MPS. All Rights Reserved.

ELECTRICAL CHARTERISTICS

V_{IN} = 12V, R_{SET} = 10kΩ, C_{OUT} = 220µF, T_J = -40°C to +125°C, typical values are at T_J = 25°C, unless otherwise noted.

Parameters	Symbol	Condition	Min	Typ	Max	Units
Supply Current						
Quiescent current	I_Q	EN = high, no load		1	2	mA
		Fault latch-off		0.7	1.2	mA
		EN = 0V, V_{IN} = 12V		1	10	µA
Power FET						
On resistance	$R_{DS(ON)}$			7	12	mΩ
Off-state leakage current	I_{OFF}	V_{IN} = 28V, EN = 0V, OUT = 0V, T_J = 25°C			1	µA
Thermal Shutdown						
Shutdown temperature (5)				167		°C
Hysteresis (5)		Auto-retry mode only		28		°C
Under-Voltage Protection						
Under-voltage lockout threshold	V_{UVLO}	Rising		4.15	5.5	V
		Falling	2.7	3.8	5	V
UVLO hysteresis	$V_{UVLOHYS}$			250		mV
AUTO Pin						
Low-level input voltage	V_{AUTOL}	Latch-off mode			1	V
High-level input voltage	V_{AUTOH}	Auto-retry mode	2.5			V
Soft Start						
SS pull-up current	I_{SS}	I_{SS} changes with input	3	6	9	µA
Current Limit						
Current limit in normal operation	I_{LIMIT_NO}	R_{SET} = 10kΩ	10.5	12.5	14.5	A
Current monitor accuracy		I_{OUT} = 8A	-10		+10	%
Current limit response time (5)		I_{LIMIT} = 3A, add a 3Ω load		20		µs
Secondary current limit (5)	I_{LIMIT_H}	Any value of R_{SET}		25		A
Short-circuit protection response time (5)				200		ns
Timer						
Upper threshold voltage	V_{TMRH}		1	1.23	1.4	V
Lower threshold voltage	V_{TMRL}	Over-current restart cycles	0.09	0.20	0.35	V
Fault restart duty cycle			0.1	0.25	0.5	%
Insertion delay charge current	I_{INSERT}		15	40	60	µA
Fault detection charge current	I_{FLTD}		80	200	300	µA
Fault restart sink current	I_{FLTS}		0.15	0.5	0.8	µA
Discharge R_{ON}		I_{OUT} < I_{LIMIT}	15	35	80	Ω

MPS Proprietary Information. Patent Protected. Unauthorized Photocopy and Duplication Prohibited.
© 2020 MPS. All Rights Reserved.

ELECTRICAL CHARTERISTICS *(continued)*

V_{IN} = 12V, R_{SET} = 10kΩ, C_{OUT} = 220µF, T_J = -40°C to +125°C, typical values are at T_J = 25°C, unless otherwise noted.

Parameters	Symbol	Condition	Min	Typ	Max	Units
Enable						
Rising threshold	V_{ENRS}		1.4	1.8	2.2	V
Falling threshold	V_{ENFS}		1.2	1.6	2	V
Hysteresis	V_{ENHYS}			200		mV
FB (Power Good Feedback)						
Feedback rising threshold	V_{FBRS}		0.51	0.6	0.69	V
Feedback falling threshold	V_{FBFS}		0.45	0.54	0.63	V
Hysteresis	V_{FBHYS}			60		mV
Fault Bar/Power Good						
Low-level output voltage	V_{OL}	1mA sink current		0.1	0.3	V
Off-state leakage current	I_{FLT_LKG}	V_{FLTB} = 5V			1	µA
Fault bar propagation delay		Pull up I_{SET} from 0V to 1V	5	20	40	µs
PG low-level output voltage	V_{OL_100}	V_{IN} = 0V, pull up to 3.3V through a 100kΩ resistor		500	800	mV
	V_{OL_10}	V_{IN} = 0V, pull up to 3.3V through a 10kΩ resistor		600	800	mV

Note:

5) Derived from bench characterization. Not tested in production.

MPS Proprietary Information. Patent Protected. Unauthorized Photocopy and Duplication Prohibited.
© 2020 MPS. All Rights Reserved.

TYPICAL CHARACTERISTICS

V_{IN} = 12V, C_{OUT} = 220µF, C_T = 220nF, R_{SET} = 10kΩ, unless otherwise noted.

Current Limit vs. Temperature

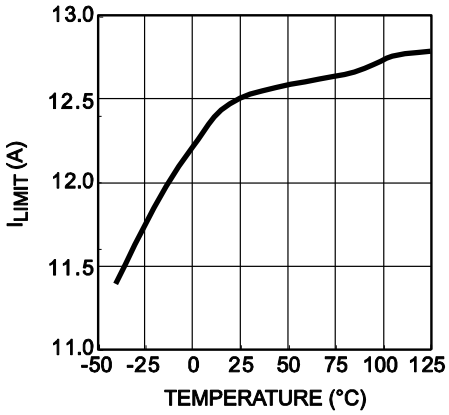

Quiescent Current vs. Temperature

EN = 0

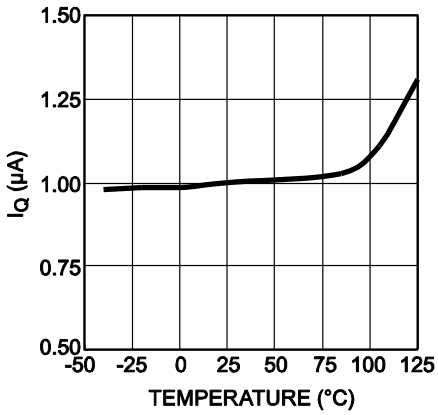

Quiescent Current vs. Temperature

EN = high, no load

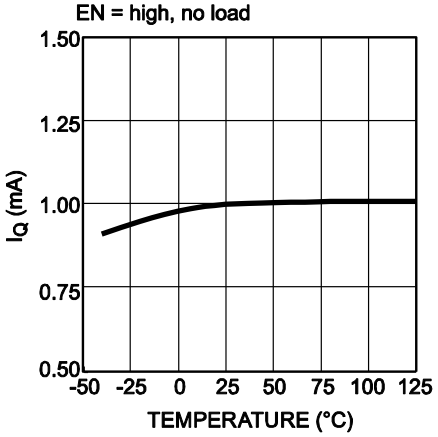

$R_{DS(ON)}$ vs.Temperature

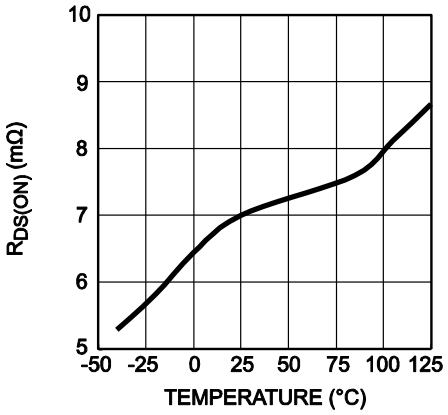

EN Threshold vs. Temperature

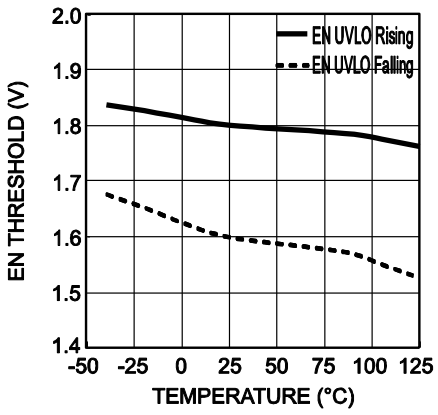

V_{IN} UVLO vs. Temperature

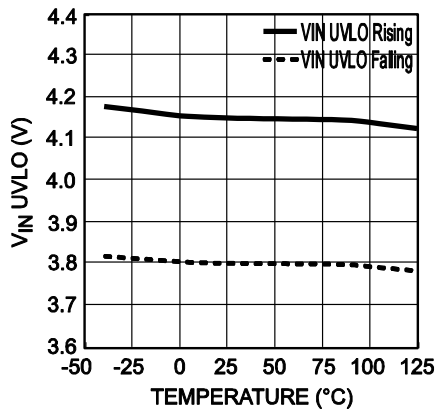

MPS Proprietary Information. Patent Protected. Unauthorized Photocopy and Duplication Prohibited.
© 2020 MPS. All Rights Reserved.

TYPICAL PERFORMANCE CHARACTERISTICS

V_{IN} = 12V, C_{OUT} = 220µF, C_T = 220nF, C_{SS} = 10nF, R_{SET} = 10kΩ, T_A = 25°C, unless otherwise noted.

$R_{DS(ON)}$ vs. Input Voltage

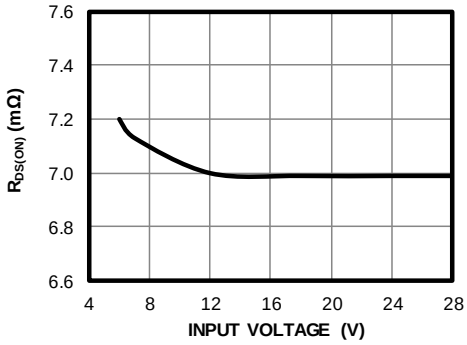

$R_{DS(ON)}$ vs. Load Current

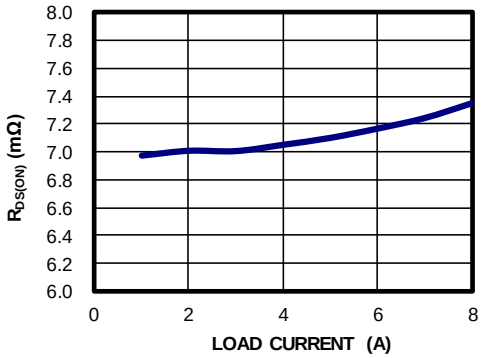

Efficiency vs. Load Current

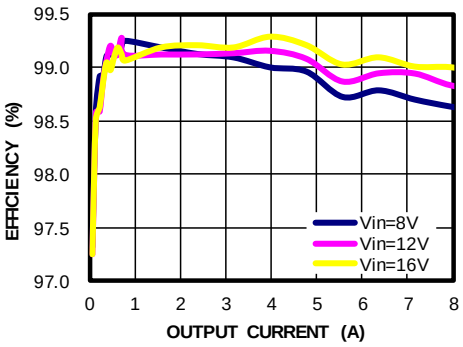

Power Loss vs. Load Current

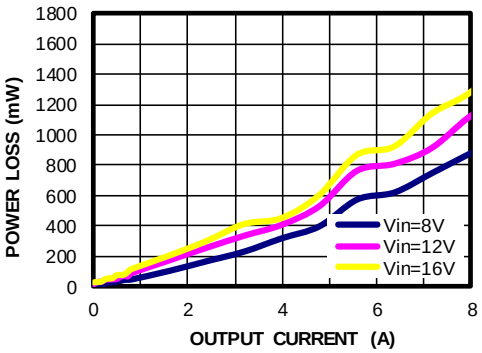

MPS Proprietary Information. Patent Protected. Unauthorized Photocopy and Duplication Prohibited.
© 2020 MPS. All Rights Reserved.

TYPICAL PERFORMANCE CHARACTERISTICS *(continued)*

V_{IN} = 12V, C_{OUT} = 220µF, C_T = 220nF, C_{SS} = 10nF, R_{SET} = 10kΩ, T_A = 25°C, unless otherwise noted.

Start-Up through VIN
I_{OUT} = 0A

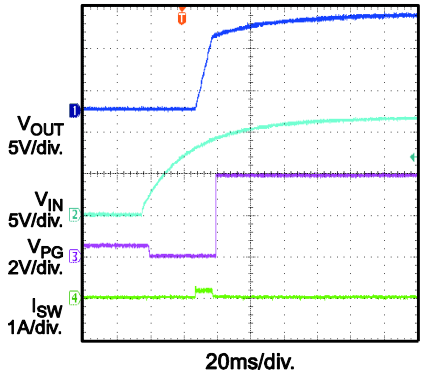

Start-Up through VIN
I_{OUT} = 8A

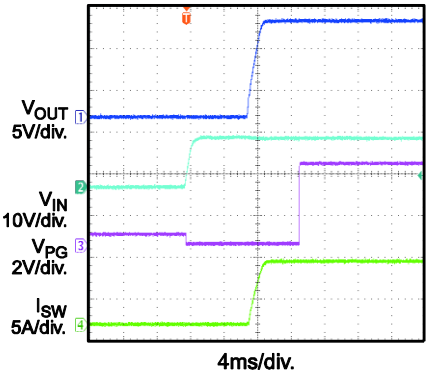

Shutdown through VIN
I_{OUT} = 0A

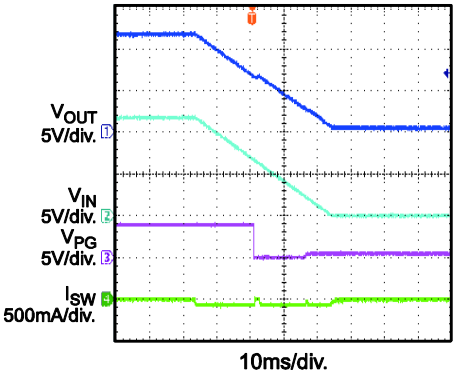

Shutdown through VIN
I_{OUT} = 8A

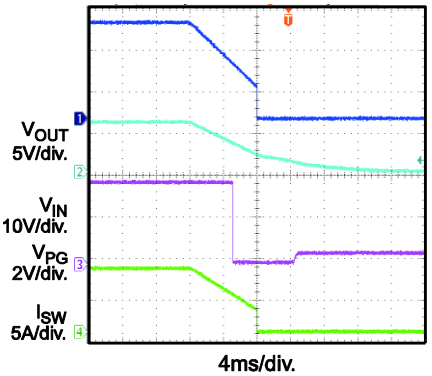

Start-Up through EN
I_{OUT} = 0A

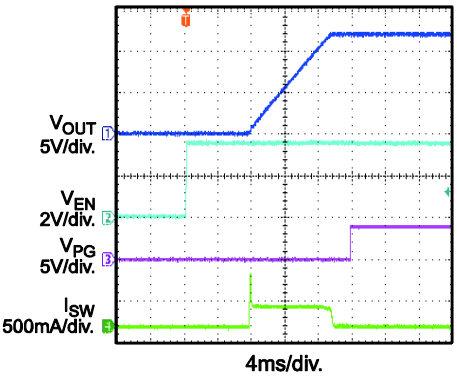

Start-Up through EN
I_{OUT} = 8A

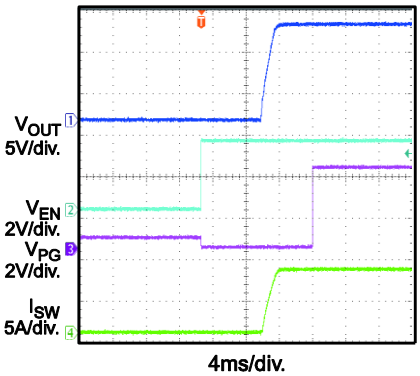

Shutdown through EN
I_{OUT} = 0A

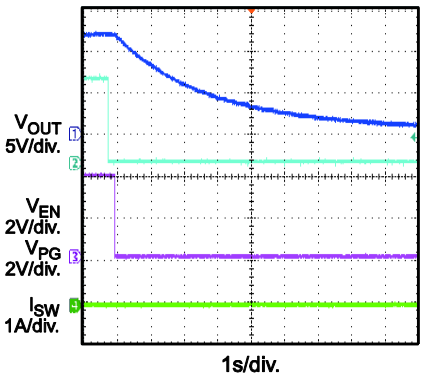

Shutdown through EN
I_{OUT} = 8A

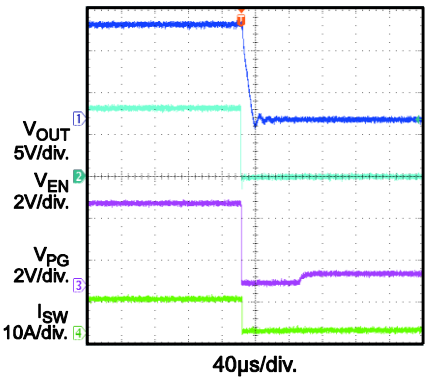

Thermal Shutdown
I_{OUT} = 2A, latch-off mode

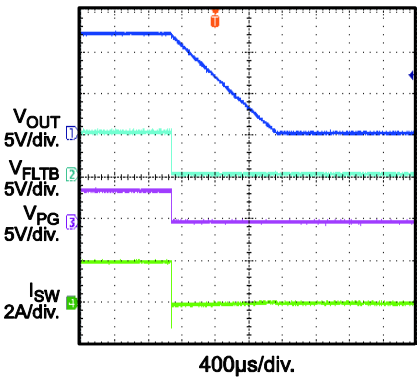

MPS Proprietary Information. Patent Protected. Unauthorized Photocopy and Duplication Prohibited.
© 2020 MPS. All Rights Reserved.

TYPICAL PERFORMANCE CHARACTERISTICS *(continued)*

V_{IN} = 12V, C_{OUT} = 220µF, C_T = 220nF, C_{SS} = 10nF, R_{SET} = 10kΩ, T_A = 25°C, unless otherwise noted.

Thermal Shutdown
I_{OUT} = 2A, auto-retry mode

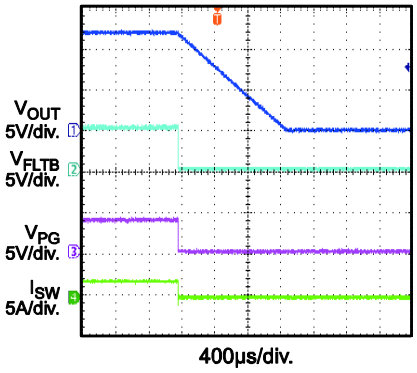

Thermal Recovery
I_{OUT} = 2A, auto-retry mode

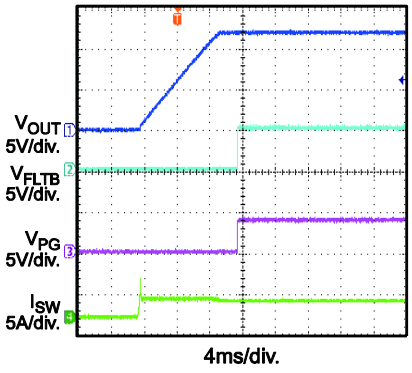

OCP
V_{IN} = 12V, latch-off mode

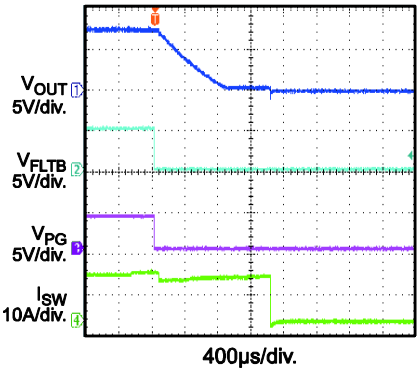

OCP
V_{IN} = 12V, auto-retry mode

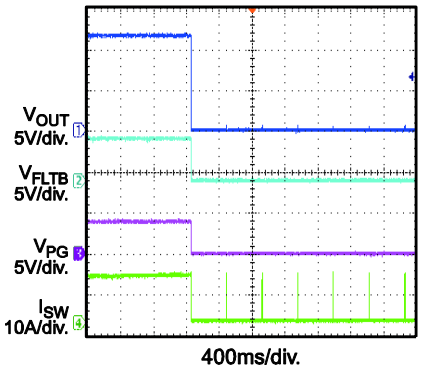

SCP Entry
V_{IN} = 12V, latch-off mode

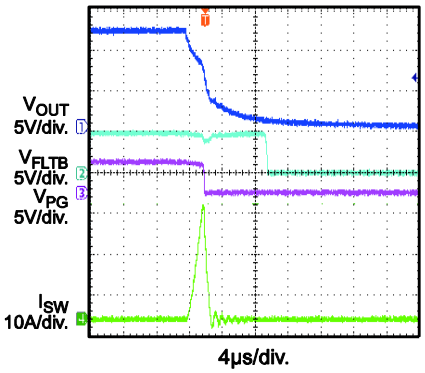

SCP Entry
V_{IN} = 12V, auto-retry mode

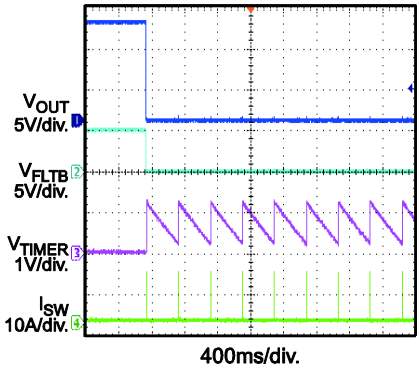

SCP Steady State
V_{IN} = 12V, auto-retry mode

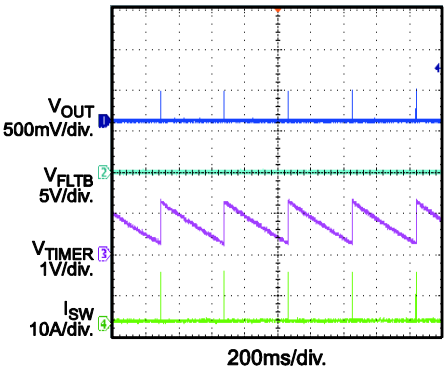

SCP Recovery
V_{IN} = 12V, auto-retry mode

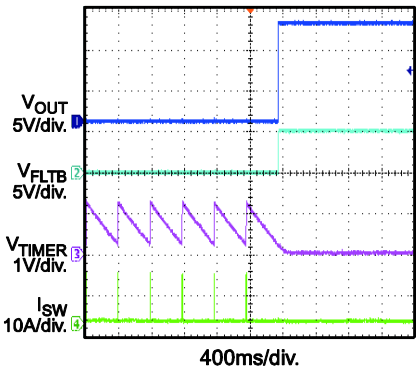

MPS Proprietary Information. Patent Protected. Unauthorized Photocopy and Duplication Prohibited.
© 2020 MPS. All Rights Reserved.

FUNCTIONAL BLOCK DIAGRAM

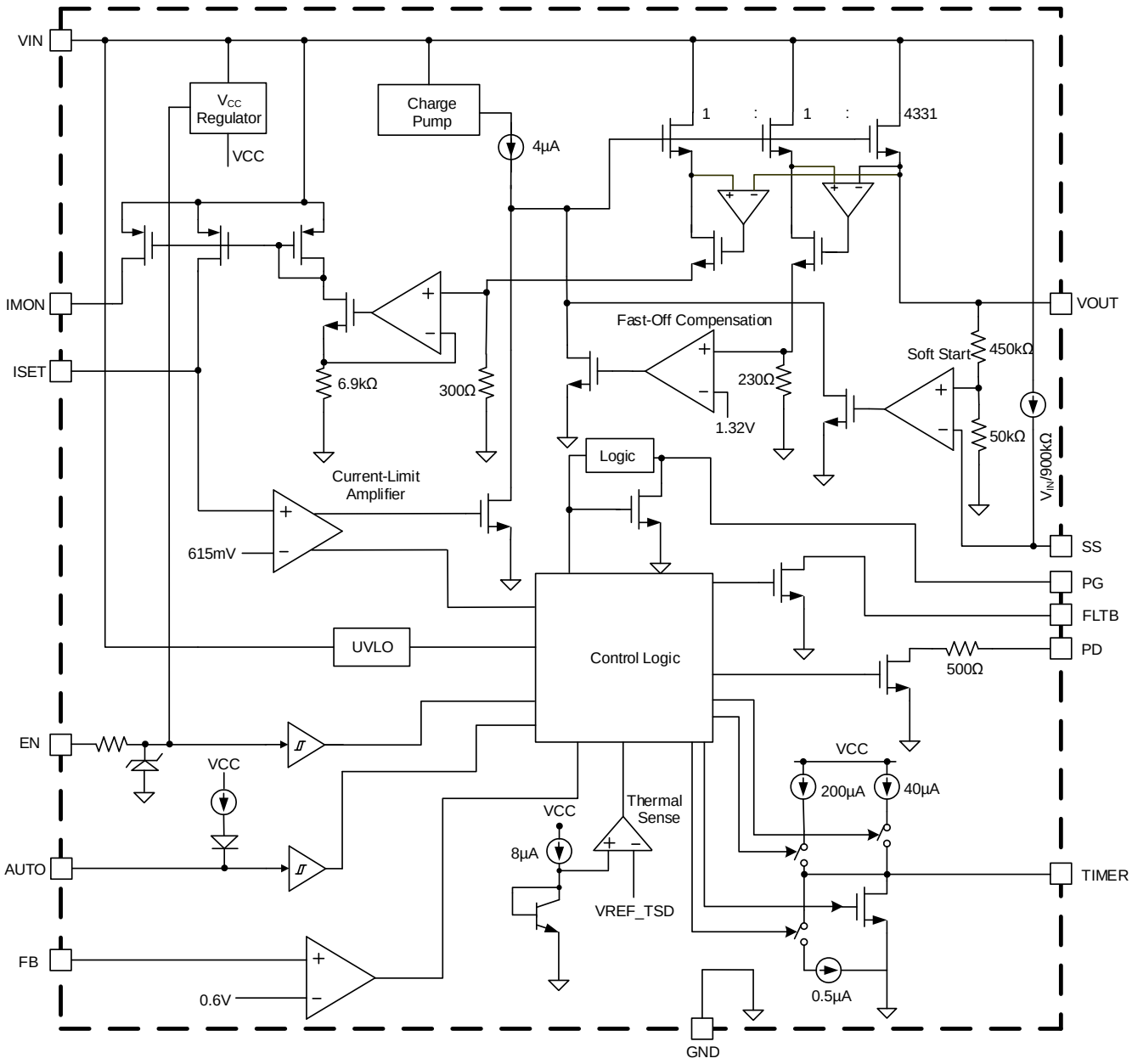

Figure 1: Functional Block Diagram

MPS Proprietary Information. Patent Protected. Unauthorized Photocopy and Duplication Prohibited.
© 2020 MPS. All Rights Reserved.

OPERATION

The MPQ5068 protects circuitry on its output from transients on its input. It also protects its input from undesired shorts and transients coming from its output. The MPQ5068 provides an integrated solution to monitor the input voltage, output voltage, output current, and die temperature. This means an external current-sense resistor, power MOSFET, and thermal sense device are not required for this solution.

Current Limit

The MPQ5068 provides a constant current limit that can be configured by an external resistor. If the device reaches its current limit threshold, the internal circuit regulates the gate voltage to hold the current in the MOSFET constant. To limit the current, the gate-to-source voltage must drop from 5V to about 1V. The typical response time is about 20µs, and the output current may have a small overshoot during this time period.

If the current limit is triggered, the fault timer starts. If the output current falls below the current limit threshold before the end of the fault timeout period, the MPQ5068 resumes normal operation. If the current limit duration remains after the fault timeout period, the MOSFET turns off. The subsequent behavior is based on the AUTO pin configuration. If the temperature reaches the thermal protection threshold during the fault timeout period, the MOSFET turns off.

When the AUTO pin is floating, the part functions in auto-retry mode for over-current protection (OCP). The part enters latch-off mode if the device detects an OC condition and pulls the AUTO pin to ground.

If the device reaches either its current limit or its over-temperature threshold, the FLTB pin is driven low with a 20µs propagation delay to indicate a fault. The desired current limit during normal operation is set by the external current-limit resistor.

Thermal Shutdown

Thermal shutdown is implemented to prevent the chip from thermal runaway. If the silicon die temperature exceeds its upper threshold (167°C), the power MOSFETs shut down. When the temperature drops below its lower threshold (139°C), the chip is enabled again.

Short-Circuit Protection

If the load current increases rapidly due to a short circuit, the current may significantly exceed the current-limit threshold before the control loop can respond. If the current reaches the 25A secondary current limit level, a fast turn-off circuit activates to turn off the MOSFET using a 100mA pull-down gate discharge current (see Figure 2). This limits the peak current through the switch to limit the input voltage drop. The total short-circuit response time is about 200ns. The FLTB pin switches low once it reaches a 25A current limit, and asserts low until the circuit resumes normal operation.

Fault Timer and Restart

When the current reaches its over-current limit threshold, a 200µA fault timer current source charges the external capacitor (C_T) at the TIMER pin. If the current limit state is removed before the TIMER pin reaches 1.23V, the MPQ5068 returns to normal operation, and a low-value resistor discharges C_T after the TIMER voltage reaches 1.23V. If the current limit state continues after the TIMER pin voltage reaches 1.23V, the MOSFET switches off. The subsequent restart procedure depends on the selected retry configuration.

If the AUTO pin is connected to ground or pulled low, the MPQ5068 latches off. Restart the input power or cycle the EN signal to resume normal operation.

Floating the AUTO pin or pulling it above 2.5V causes the device to operate in hiccup mode (see Figure 3). At the end of the fault timeout period, the MOSFET turns off and a low-current (0.5µA) sink discharges the external capacitor (C_T).

If the TIMER voltage reaches the low threshold (0.2V), the part restarts. If the fault condition remains, the fault timeout period and restart timer repeat.

MPS Proprietary Information. Patent Protected. Unauthorized Photocopy and Duplication Prohibited.
© 2020 MPS. All Rights Reserved.

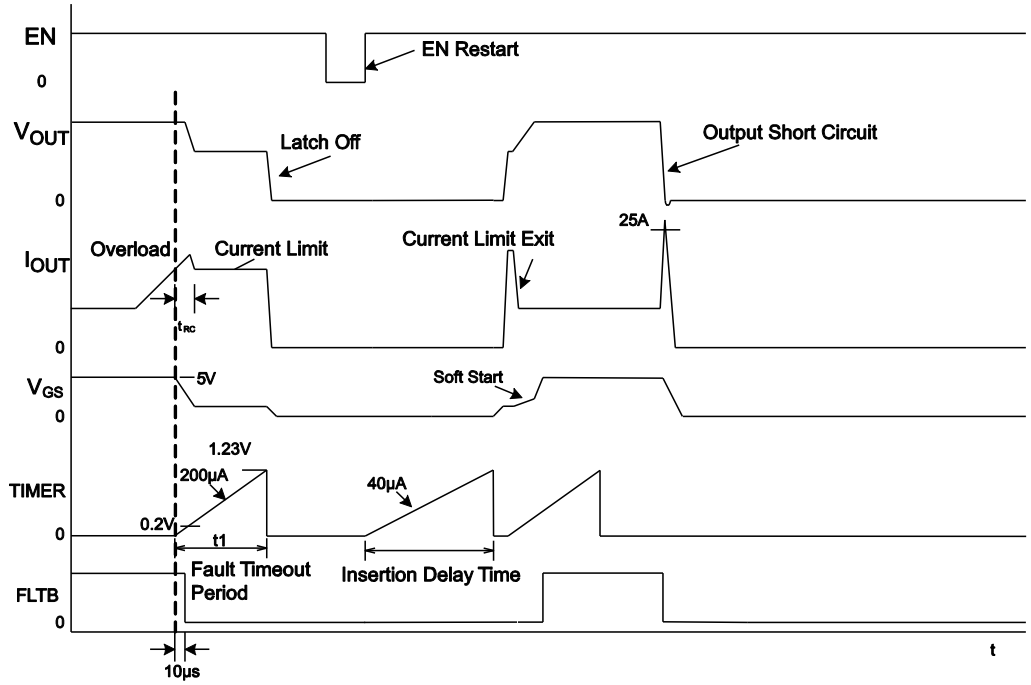

Figure 2: Over-Current Protection (Latch-Off Mode, AUTO = Low)

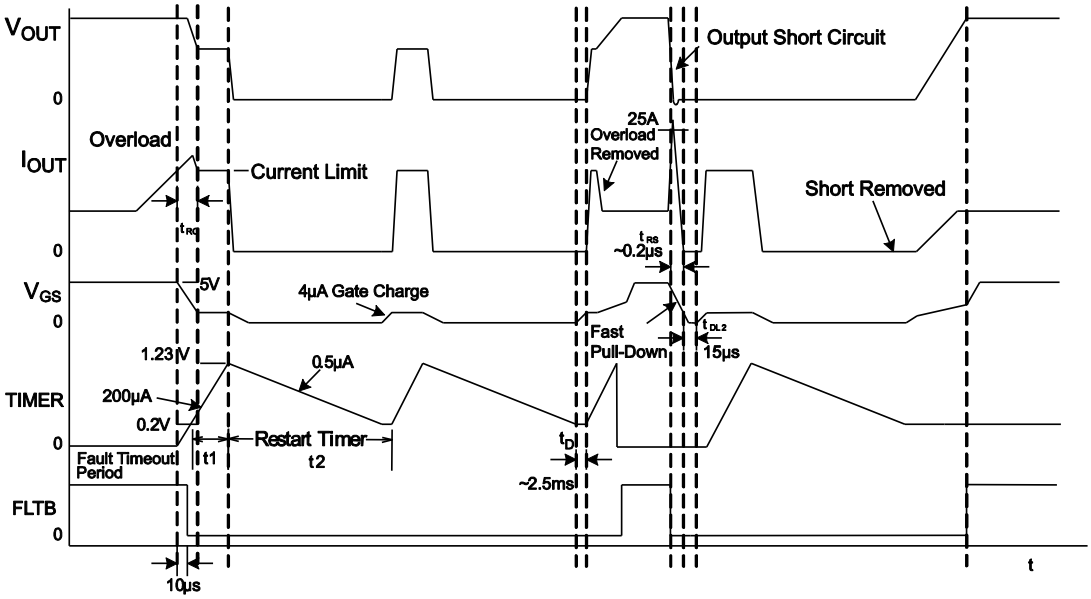

Figure 3: Over-Current Protection (Auto-Retry Mode, AUTO = High)

MPS Proprietary Information. Patent Protected. Unauthorized Photocopy and Duplication Prohibited.
© 2020 MPS. All Rights Reserved.

Power Good (PG)

Power good (PG) indicates whether the output voltage is in the normal range relative to the input voltage. It is the open drain of a MOSFET. Pull the PG pin up to the external power supply through a 100kΩ resistor. During start-up, PG's output is driven low. This directs the system to remain off, and minimizes the output load to reduce inrush current and power dissipation during start-up.

The PG signal is pulled high when the device reaches all of the following conditions:

- V_{FB} > 0.6V
- V_{GS} > 3V
- V_{OUT} > V_{IN} - 1V

Then the system can draw full power.

If the FB voltage drops below 0.54V, the MOSFET's V_{GS} voltage falls below 3V, or the output voltage drops below V_{IN} - 1V, then PG is pulled low.

The PG output is also pulled low if either the EN pin is below its threshold or input under-voltage lockout (UVLO) is triggered.

With no input, PG remains at logic low in the presence of a pull-up supply.

The FLTB Pin

The fault bar (FLTB) pin is an open-drain output that indicates whether a fault has occurred. Pull the FLTB pin up to the external power supply through a 100kΩ resistor.

If the device reaches its current limit, the die temperature exceeds the thermal shutdown threshold, or the MOSFET is shorted before power-up, then the fault output is driven low with a 20µs propagation delay. If a short occurs and the current reaches its 25A secondary current limit, FLTB goes low with an 8µs delay.

FLTB goes high when the MPQ5068 resumes normal operation, which is when the output voltage exceeds the set voltage of the PG rising threshold and the MOSFET is fully on (V_{GS} > 3V).

External Pull-Up Voltage for PG and FLTB

PG and FLTB require an external power supply. PG's open-drain output can work well with an external pull-up voltage, even when V_{IN} = 0 and EN is disabled. Use a 100kΩ pull-up resistor for PG and FLTB.

Power-Up Sequence

For hot-swap applications, the MPQ5068's input can experience a voltage spike or transient during the hot swap. This spike is caused by the parasitic inductance of the input trace and the input capacitor. An insertion delay, determined by the external capacitor at the TIMER pin, stabilizes the input voltage.

The input voltage rises immediately, and a 30Ω resistor pulls the internal V_{GS} voltage low (see Figure 4).

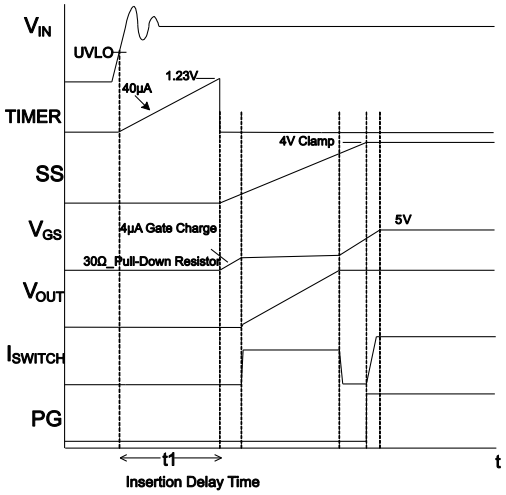

Figure 4: Start-Up Sequence

The TIMER pin charges through a 40µA constant-current source when the input voltage reaches its UVLO threshold. When the TIMER pin voltage reaches 1.23V, a 4µA current source pulls up the MOSFET's gate-source voltage. Meanwhile, the TIMER pin's voltage drops. Once the gate voltage reaches its threshold (V_{GSTH}), the output voltage rises. The soft-start capacitor determines the rising time.

Soft Start (SS)

A capacitor connected to the SS pin determines the soft-start time: When the insertion delay time ends, a constant-current source that is proportional to the input voltage ramps up the voltage on the SS pin. The output voltage rises at a similar slew rate to the SS voltage.

MPS Proprietary Information. Patent Protected. Unauthorized Photocopy and Duplication Prohibited.
© 2020 MPS. All Rights Reserved.

The SS capacitor value can be calculated with Equation (1):

$$C_{SS} = \frac{10 \times t_{SS}}{R_{SS}} \quad (1)$$

Where t_{SS} is the soft-start time, and R_{SS} = 2MΩ.

For example, a 100nF capacitor gives a soft-start time of 20ms.

If the load capacitance is extremely large, the current required to maintain the preset soft-start time can exceed the current limit. At this point, the load capacitor and the current limit control the rising time.

Float the SS pin to generate a fast ramp-up voltage. A 4μA current source pulls up the MOSFET gate. The gate charge current controls the output voltage rising time. The approximate soft-start time is about 1ms, which is the minimum soft-start time.

EN Pin

When the EN pin is above its rising threshold, the part is enabled; when EN is below that threshold, the part is disabled.

If EN drops below 0.6V, the chip goes into the lowest shutdown current mode. If EN is above 0.6V but below its rising threshold, the chip remains in shutdown mode with a slightly larger current.

When EN enables the part, the insertion delay timer starts. When the insertion delay time ends, the internal 4μA current source charges the MOSFET's gate. Charging takes about 1.5ms for V_{GS} to reach its threshold. Then the output voltage rises following the soft-start slew rate.

Damaged MOSFET Detection

The MPQ5068 can detect a shorted pass MOSFET during start-up by treating an output voltage that exceeds V_{IN} - 1V during start-up as a short on the MOSFET. The FLTB pin goes low to indicate a fault condition, and the MOSFET remains off. Once $V_{OUT} \leq V_{IN}$ - 1V, the device starts up and resumes normal operation.

Internal VCC Sub-Regulator

The MPQ5068 has an internal 5V linear sub-regulator that powers low-voltage circuitry. This regulator takes the input voltage (V_{IN}) and operates in the full V_{IN} range. When V_{IN} is above 5.0V, the output of the regulator is in full regulation. Lower V_{IN} values result in lower output voltages. The regulator is enabled when V_{IN} exceeds its UVLO threshold and EN is high. In EN shutdown mode, the internal VCC regulator is disabled to reduce power dissipation.

The PD Pin

When the PD pin connects to the output, the part is in pull-down mode. If V_{IN} is below its UVLO threshold, or the EN pin is between 0.6V and its rising threshold in this mode, an integrated 500Ω pull-down resistor attached to the output discharges the output. Add a resistor between the PD pin and the output for a slower output drop. If the PD pin is floating, pull-down mode is disabled.

AUTO Pin

When the AUTO pin is floating, the part works in auto-retry mode. In auto-retry mode, the part turns off if it exceeds its thermal limit or current limit timeout. The part turns back on when the part cools by 28°C or the restart timer completes.

If the AUTO pin is tied to ground, the part works in latch-off mode. In latch-off mode, a thermal fault or current limit fault latches the output off until EN is toggled from low to high or the input voltage restarts.

Under-Voltage Lockout (UVLO)

If the input supply falls below the under-voltage lockout (UVLO) threshold, the output is disabled and the PG pin goes low. If the supply exceeds the UVLO threshold, the output is enabled and PG is released.

Monitoring the Output Current

The IMON pin provides a voltage proportional to the output current (the current through the power device). Tie a resistor to ground to set the output gain. Place a 100nF capacitor from IMON to GND to smooth the indicator voltage.

MPS Proprietary Information. Patent Protected. Unauthorized Photocopy and Duplication Prohibited.
© 2020 MPS. All Rights Reserved.

APPLICATION INFORMATION

Setting the Current Limit (R_{SET})

The MPQ5068's current limit value should exceed the normal maximum load current. This allows for tolerance in the current-sense value. Estimate the current limit with Equation (2):

$$I_{LIMIT} = \frac{0.6(V)}{R_{SET}} \times 20 \times 10^4 (A) \quad (2)$$

Table 1 shows the bench results from the evaluation board.

Table 1: Current Limit vs. Current Limit Resistor

Current Limit Resistor (kΩ)	7.5	10	20
Current Limit (A)	15.9	12	6.08

Figure 5 shows the relationship between the set resistance (R_{SET}) and the current limit.

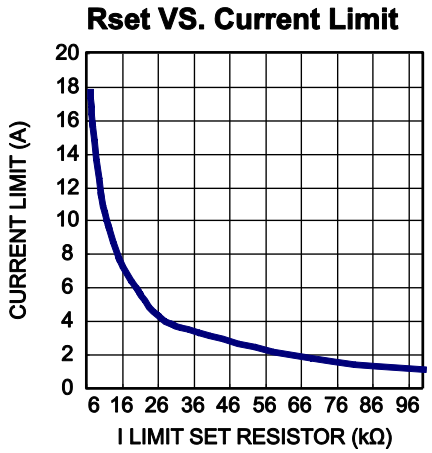

Figure 5: R_{SET} vs. Current Limit

Current Monitoring

The MPQ5068 provides MOSFET current-monitoring function. Place a resistor (R_{IMON}) to ground to set the gain of the output. I_{IMON} can be calculated with Equation (3):

$$I_{IMON} = \frac{I_{POWERFET}}{10^5} \quad (3)$$

Where $I_{POWERFET}$ is the power MOSFET current.

The IMON pin provides a voltage proportional to the output current. Place a 10kΩ resistor from the IMON pin to GND to obtain a value of 100mV/A, which is the voltage proportional to the output current. Place a 100nF capacitor from IMON to GND to smooth the indicator voltage.

Design Example

Figure 7 on page 18 shows the detailed application schematic. For the typical performance and circuit waveforms, see the Typical Performance Characteristics section on page 8. For more detailed device applications, refer to the related evaluation board datasheet.

MPS Proprietary Information. Patent Protected. Unauthorized Photocopy and Duplication Prohibited.
© 2020 MPS. All Rights Reserved.

PCB Layout Guidelines [6]

Efficient PCB layout is crucial for proper device performance. For the best results, refer to Figure 6 and follow the guidelines below:

1. Place the high-current paths (GND, IN, and OUT) very close to the device using short, direct, and wide traces.
2. Place a small bypass capacitor next to VIN to help minimize transients that may occur on the input supply line.
3. Place the external feedback resistors next to the FB pin.
4. Avoid placing any vias on the FB trace.
5. Connect the IN and GND pads to a large copper plane to improve thermal performance.
6. Place the input and output capacitors as close to the device as possible to minimize the effect of parasitic inductance.
7. Put vias on the thermal pad, and provide a large copper area near the IN pin to improve thermal performance. Ensure that all pins are connected to obtain equal current distribution in all legs.
8. Put vias on the thermal pad, and provide a large copper area near the OUT pin to improve thermal performance. Ensure that all pins are connected to obtain equal current distribution in all legs.

Note:

6) The recommended PCB layout is based on the Typical Application Circuit on page 18.

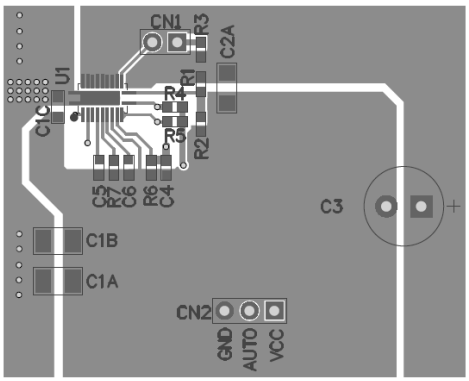

Top Layer and Top Silk

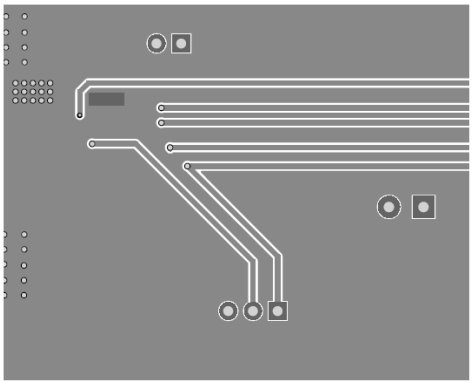

Bottom Layer and Bottom Silk

Figure 6: Recommended PCB Layout

MPS Proprietary Information. Patent Protected. Unauthorized Photocopy and Duplication Prohibited.
© 2020 MPS. All Rights Reserved.

TYPICAL APPLICATION CIRCUIT

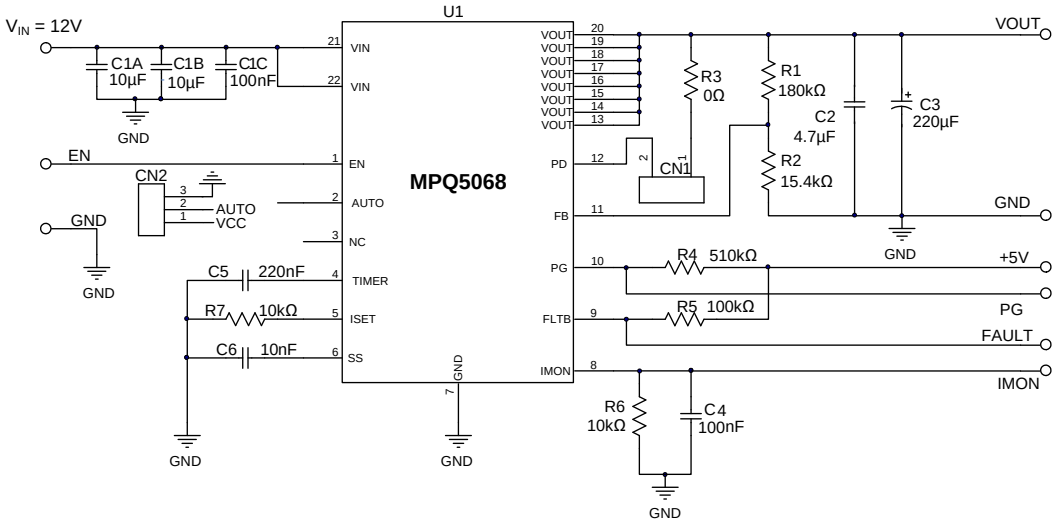

Figure 7: Typical Application Circuit

MPS Proprietary Information. Patent Protected. Unauthorized Photocopy and Duplication Prohibited.
© 2020 MPS. All Rights Reserved.

PACKAGE INFORMATION

QFN-22 (3mmx5mm)

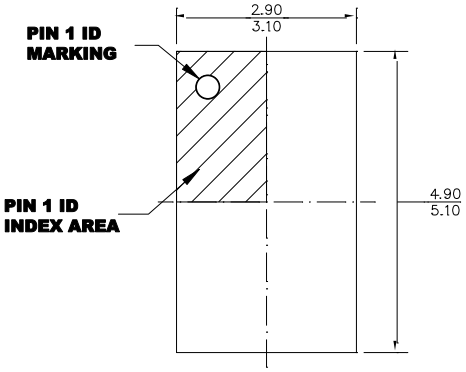

TOP VIEW

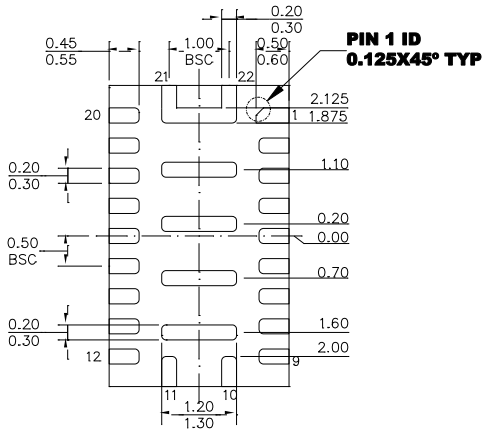

BOTTOM VIEW

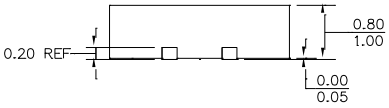

SIDE VIEW

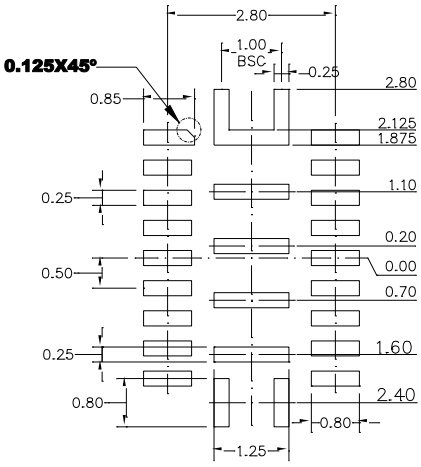

RECOMMENDED LAND PATTERN

NOTE:

1) ALL DIMENSIONS ARE IN MILLIMETERS.
2) EXPOSED PADDLE SIZE DOES NOT INCLUDE MOLD FLASH.
3) LEAD COPLANARITY SHALL BE 0.10 MILLIMETERS MAX.
4) JEDEC REFERENCE IS MO-220.
5) DRAWING IS NOT TO SCALE.

MPS Proprietary Information. Patent Protected. Unauthorized Photocopy and Duplication Prohibited.
© 2020 MPS. All Rights Reserved.

CARRIER INFORMATION

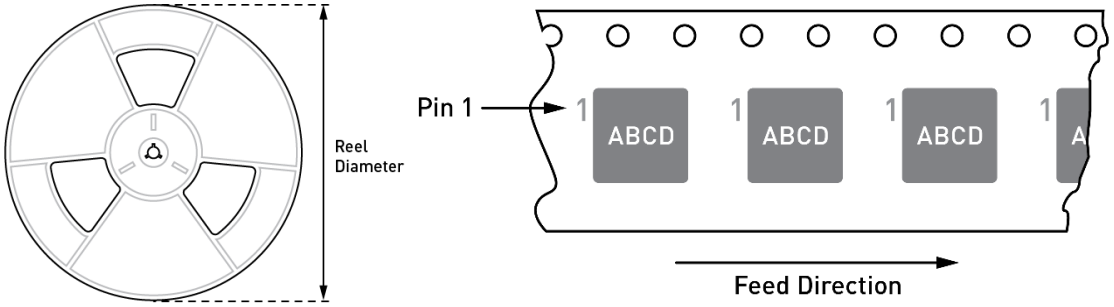

Part Number	Package Description	Quantity/ Reel	Reel Diameter	Carrier Tape Width	Carrier Tape Pitch
MPQ5068GQV-AEC1–Z	QFN-22 (3mmx5mm)	5000	13in	12mm	8mm

MPS Proprietary Information. Patent Protected. Unauthorized Photocopy and Duplication Prohibited.
© 2020 MPS. All Rights Reserved.

REVISION HISTORY

Revision #	Revision Date	Description	Pages Updated
1.0	8/11/2020	Initial Release	-

NOTICE: The information in this document is subject to change without notice. Please contact MPS for current specifications. Users should warrant and guarantee that third-party Intellectual Property rights are not infringed upon when integrating MPS products into any application. MPS will not assume any legal responsibility for any said applications.

MPS Proprietary Information. Patent Protected. Unauthorized Photocopy and Duplication Prohibited.
© 2020 MPS. All Rights Reserved.