NextGen Components,Inc.

PART CODE: SMCSK840000S84

SPECIFICATION SHEET

SPECIFICATION SHEET NO.	N1230- SMCSK840000S84
DATE	Dec.30, 2021
REVISION	A0
DESCRIPITION	SMD Schottky Barrier Rectifier, 2 Pads, SMC/DO-214AB series, SK84C Type Reverse Voltage 40V Max. Forward Current 8A Max. Operating Temp. Range -55°C ~+150°C, Package in Tape/Reel, 3000pcs/Reel RoHS/RoHS III compliant
CUSTOMER	
CUSTOMER PART NUMBER	
CROSS REF. PART NUMBER	
ORIGINAL PART NUMBER	MDD SK84C
PART CODE	SMCSK840000S84

VENDOR APPROVE
Issued/Checked/Approved NextGen Components, Inc. Mandy Xu NextGen Components, Inc. Ruby Zhang NextGen Components, Inc. Jack Zhang
DATE: Dec.30, 2021

CUSTOMER APPROVE
DATE:

NextGen Components,Inc.

PART CODE: **SMCSK840000S84**

SMD SCHOTTKY BARRIER RECTIFIER SMC SERIES

MAIN FEATURE

- The plastic package carries Underwriters Laboratory Flammability Classification 94V-0
- Low reverse leakage
- Built-in strain relief
- Low power loss, high efficiency
- High forward surge current capability
- High temperature soldering guaranteed: 250℃/ 10 seconds at terminals
- Metal silicon junction, majority carrier conduction

APPLICATION

- For surface mounted applications

RFQ
Request For Quotation

PART CODE GUIDE

SMC	SK840000	S	84
1	2	3	4

1) **SMC:** SMD Schottky Barrier Rectifier, 2 Pads, Package SMC/DO-214AB series

2) **SK84000**: Type code for original part number SK84C

3) **S**: Package code, Tape/Reel, 3000pcs/reel.

4) **84:** Specification code for Reverse Voltage 40V Max. Forward Current 8A Max.

SMD SCHOTTKY BARRIER RECTIFIER SMC SERIES

DIMENSION (Unit: Inch/mm)

Image for reference



Marking: SK84C

SMC/DO-214AB

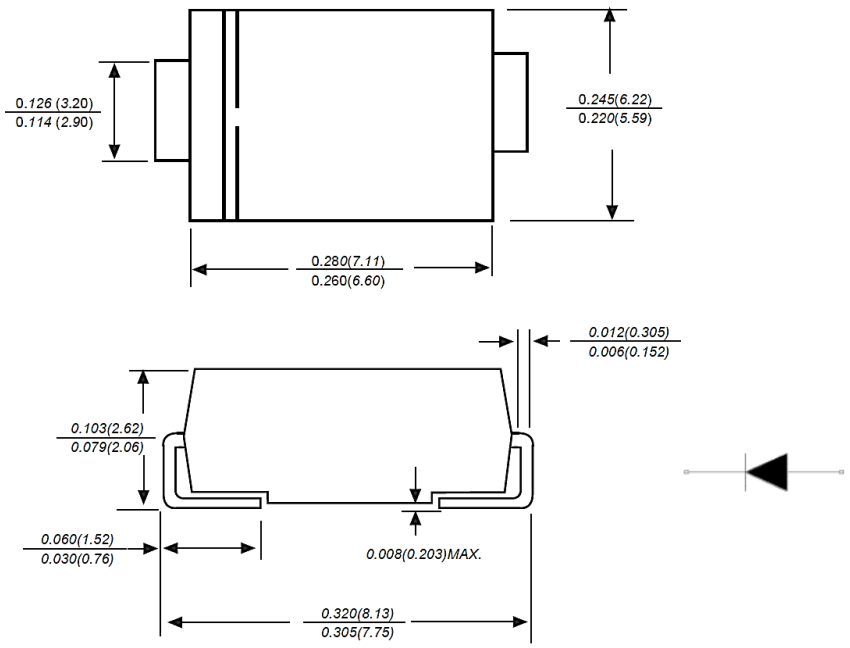

Recommend Pad Layout

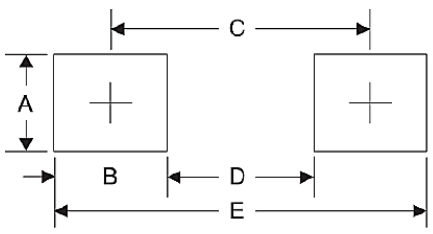

Symbol	Unit (inch)	Unit (mm)
A	0.170	4.30
B	0.160	4.10
C	0.311	7.90
D	0.150	3.80
E	0.472	12.0

SMD SCHOTTKY BARRIER RECTIFIER SMC SERIES

MECHANICAL DATA

Case	Terminals	Polarity	Mounting Position	Weight per piece
JEDEC SMC/DO-214AB molded plastic body	Solder plated, Solderable per MIL-STD-750, Method 2026	Polarity symbol marking on case	Any	0.0070 Ounce, 0.2180 grams

MAX. RATING & CHARACTERISTICS

Parameter		SYMBOLS	VALUE			UNITS
			Min.	Typical	Max.	
Repetitive peak reverse voltage		V_{RRM}			40	Volts
RMS voltage		V_{RMS}			28	Volts
DC blocking voltage		V_{DC}			40	Volts
Average forward output rectified current at TL (see fig.1)		I_{AV}			8.0	A
Peak forward surge current 8.3ms single half sine-wave superimposed on rated load (JEDEC Method)		I_{FSM}		150		A
Instantaneous forward voltage at 8.0A		V_F			0.55	Volts
DC reverse current at rated DC blocking voltage	**TA=25℃**	I_R			1.0	mA
	TA=100℃				50	mA
Junction capacitance (NOTE 2)		C_J		900		pF
Thermal resistance (Note 3)		$R_{\theta JA}$		35		°C/W
Operating junction temperature range		T_J	-55		+150	°C
Storage temperature range		T_{STG}	-55		+150	°C

Note

1. Ratings at 25 C ambient temperature unless otherwise specified. Single phase half-wave 60Hz, resistive or inductive load, for capacitive load current derate by 20%.
2. Measured at 1.0MHz and applied reverse voltage of 4.0Voltage
3. P.C.B. mounted with 0.2x0.2”(5.0x5.0mm) copper pad areas.

RELIABILITY

Number	Experiment Items	Experiment Method And Conditions	Reference Documents
1	Solder Resistance Test	Test 250°C± 5°C for 10 ± 2 sec. Immerse body into solder 1/16" ± 1/32"	MIL-STD-750D METHOD-2031.2
2	Solderability Test	230°C ±5°C for 5 sec.	MIL-STD-750D METHOD-2026.1 0
3	Pull Test	1 kg in axial lead direction for 10 sec.	MIL-STD-750D METHOD-2036.4
4	Bend Test	0.5Kg Weight Applied To Each Lead, Bending Arcs 90 °C ± 5 °C For 3 Times	MIL-STD-750D METHOD-2036.4
5	High Temperature Reverse Bias Test	T_A=100°C for 1000 Hours at V_R=80% Rated V_R	MIL-STD-750D METHOD-1038.4
6	Forward Operation Life Test	TA=25°C Rated Average Rectified Current	MIL-STD-750D METHOD-1027.3
7	Intermittent Operation Life Test	On state: 5 min with rated IRMS Power Off state: 5 min with Cool Forced Air. On and off for 1000 cycles.	MIL-STD-750D METHOD-1036.3
8	Pressure Cooker Test	15 PSIG, T_A=121°C, 4 hours	MIL-S-19500 APPENOIXC
9	Temperature Cycling Test	-55°C~+125°C; 30 Minutes For Dwelled Time 5 minutes for transferred time. Total: 10 cycles.	MIL-STD-750D METHOD-1051.7
10	Thermal Shock Test	0°C for 5 minutes., 100°C for 5minutes, Total: 10 cycles	MIL-STD-750D METHOD-1056.7
11	Forward Surge Test	8.3ms Single Sale Sine-wave One Surge.	MIL-STD-750D METHOD-4066.4
12	Humidity Test	T_A=65°C, RH=98% for 1000 hours.	MIL-STD-750D METHOD-1021.3
13	High Temperature Storage life Test	150°C for 1000 Hours	MIL-STD-750D METHOD-1031.5

SUGGESTED REFLOW PROFILE (For Reference Only)

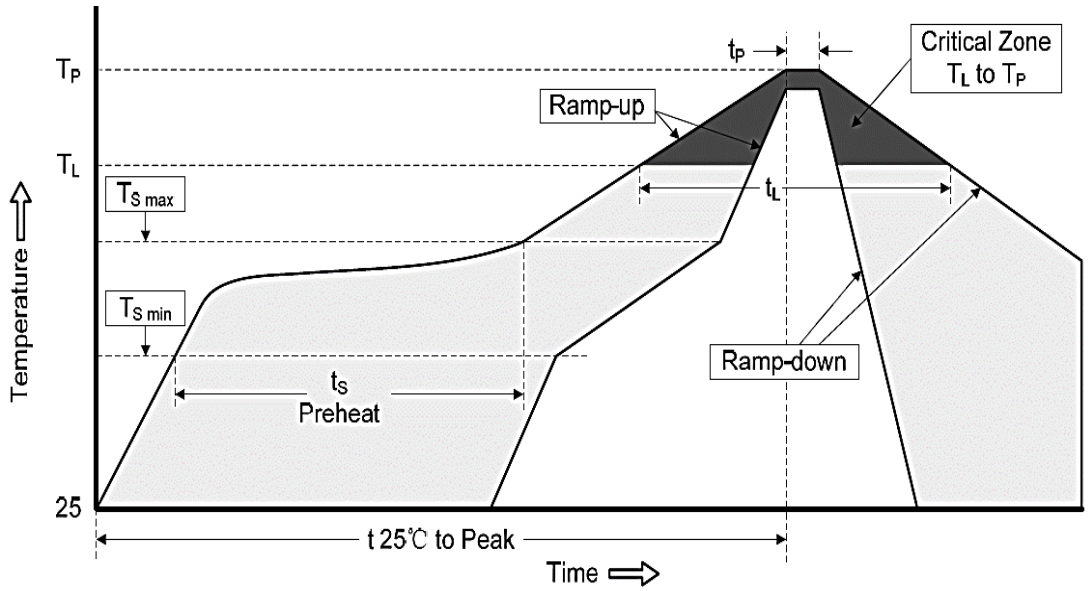

Profile Feature		Pb-Free Assembly
Average Ramp-up Rate (Ts Max to Tp)		3℃/second Max
Preheat	**Temperature Min (Ts Min.)**	150℃
	Temperature Max (Ts Max.)	200℃
	Time (ts Min. to ts Max.)	60 ~ 180 seconds
Time maintained above	**Temperature (TL)**	217℃
	Time (tL)	60 ~ 150 seconds
Peak/Classification Temperature (Tp)		250 ℃
Time within 5℃ of actual Peak Temperature (tp)		10 seconds
Ramp-down rate		6 ℃ /Second Max.
Time 25 ℃ to Peak Temperature		6 minutes Max.
Suggest reflow times		3 Times Max.

RATINGS AND CHARACTERISTIC CURVES (For Reference Only)

Fig.1 Forward Current Derating Curve

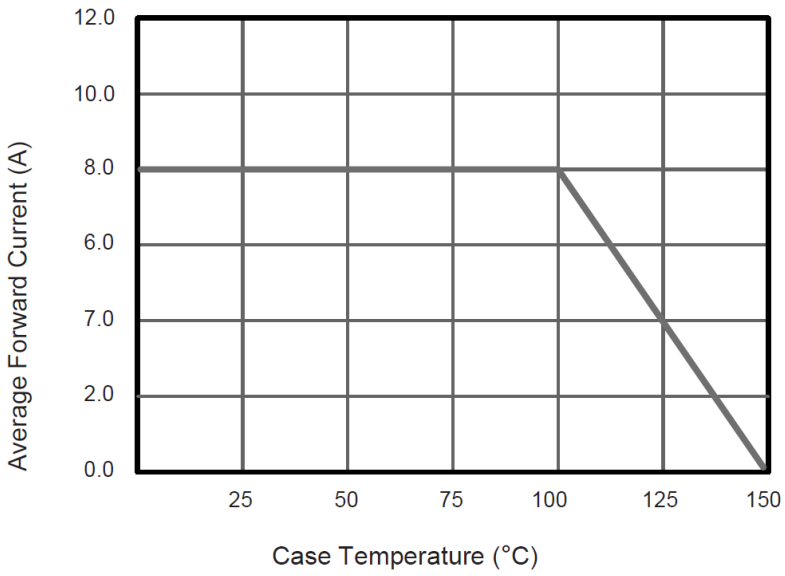

Fig.2 Typical Reverse Characteristics

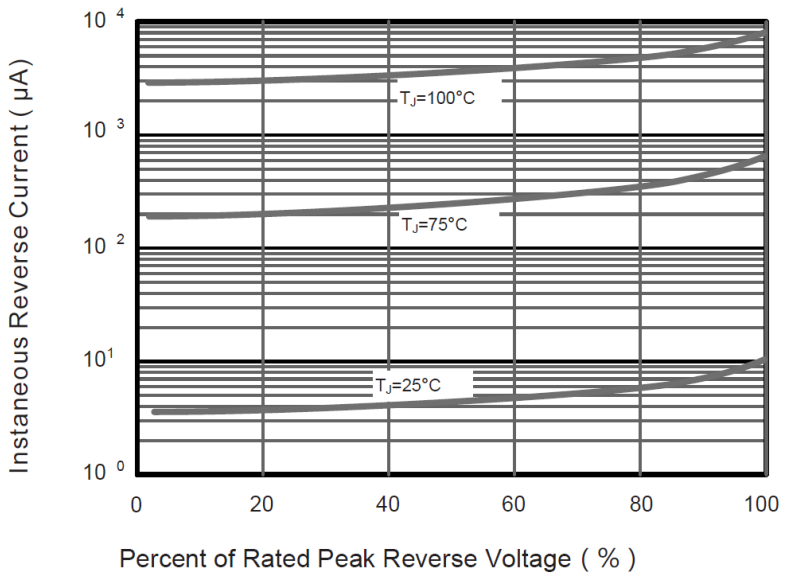

RATINGS AND CHARACTERISTIC CURVES (For Reference Only)

Fig.3 Typical Forward Characteristic

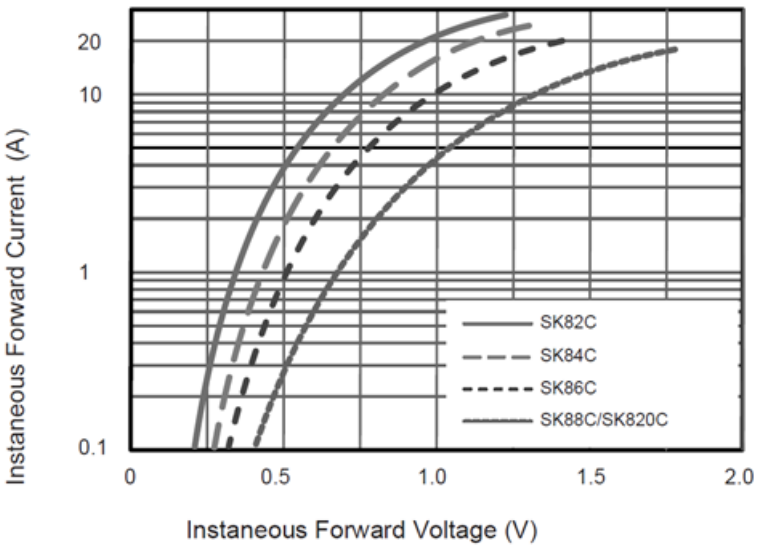

Fig.4 Typical Junction Capacitance

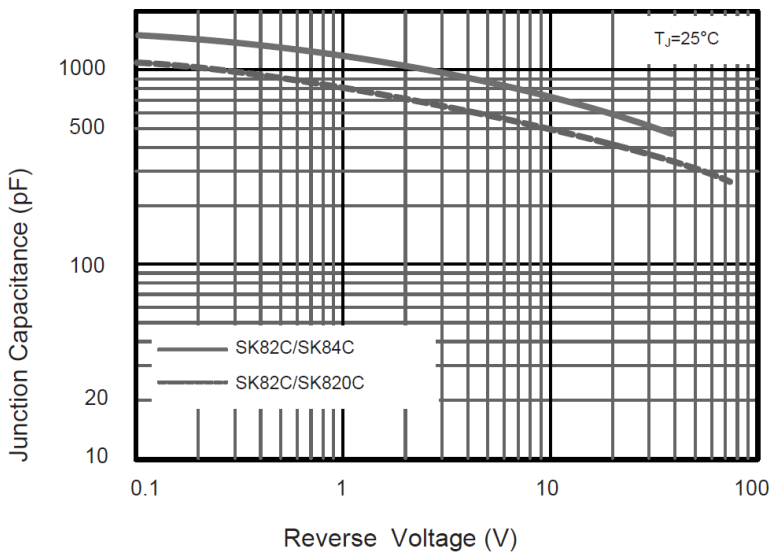

RATINGS AND CHARACTERISTIC CURVES (For Reference Only)

Fig.5 Maximum Non-Repetitive Peak Forward Surage Current

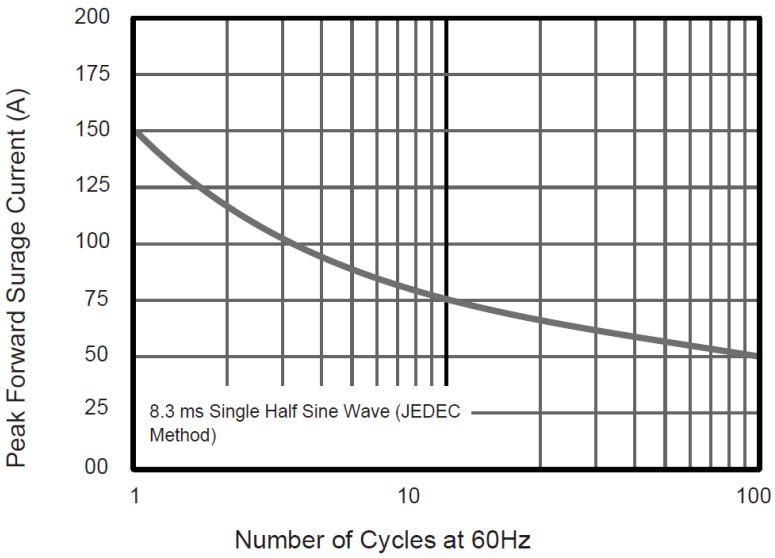

Fig.6- Typical Transient Thermal Impedance

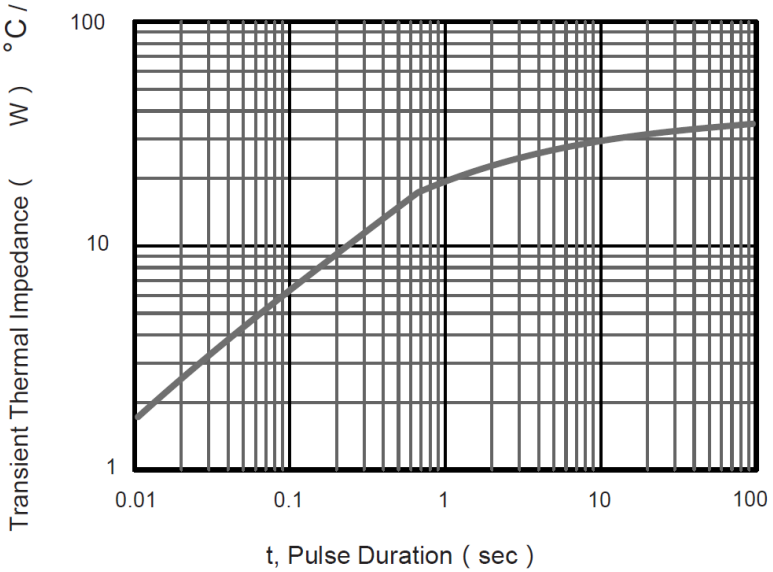

TAPE/REEL (Unit: mm)

All Devices are packed in accordance with EIA standard RS-481-A and specifications.

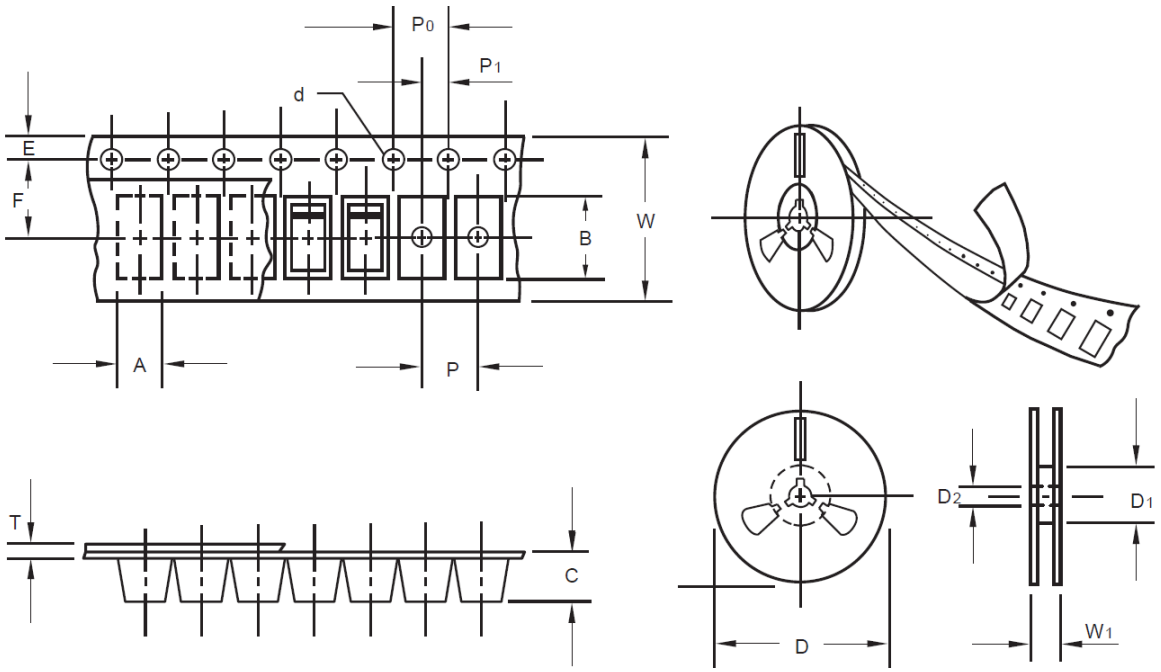

Item	Symbol	Tolerance	SMC/DO-214AB
Carrier width	A	0.1	6.15
Carrier Length	B	0.1	8.41
Carrier Depth	C	0.1	2.42
Sprocket hole	d	0.05	1.50
13”Reel outside diameter	D	2.0	330.00
13”Reel inner diameter	D1	Min.	50.00
7”Reel outside diameter	-	-	-
7”Reel inner diameter	-	-	-
Feed hole diameter	D2	0.5	13.00
Sprocket hole position	E	0.1	1.75
Punch hole position	F	0.1	7.50
Punch hole pitch	P	0.1	8.00
Sprocket hole pitch	P0	0.1	4.00
Embossment center	P1	0.1	2.00
Overall tape thickness	T	0.1	0.25
Tape width	W	0.3	16.00
Reel width	W1	1.0	16.50

PACKAGE For Reference

Case Code	SMC
Reel Size	13”
Reel Size	330 mm
MPQ/Reel	3000 pcs
Qty. /Box	6000 pcs
G.W/Box	6 lbs

DISCLAIMER

NextGen Component, Inc. reserves the right to make changes to the product(s) and or information contained herein without notice. No liability is assumed as a result of their use or application. No rights under any patent accompany the sale of any such product(s) or information