KEMET Part Number: SSRH24NVS-12500

(UALS24VS125000)

KEMET, SSRH24NVS/NHS, AC Line Filters, Common Mode, 0.05 H

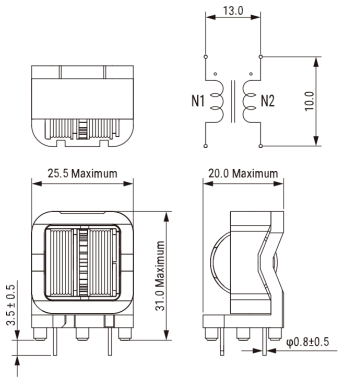

General Information	
Series:	SSRH24NVS/NHS
Style:	Through-Hole
Features:	Compact Size, Light Weight, High Performance, Low Rdc
RoHS:	Yes
Miscellaneous:	Temperature Rise Maximum: 65 K

Specifications	
Voltage AC:	250 VAC
Inductance:	50 mH (10 kHz)
Current:	1.2 A
Temperature Range:	-25/+120°C
DC Resistance:	430 mOhms

Dimensions	
L	25.5mm MAX
T	20mm MAX
H	31mm MAX
LL	3.5mm +/-0.5mm
S	13mm NOM
S1	10mm NOM

Packaging Specifications	
Packaging:	Tray
Packaging Quantity:	200
Weight:	25 g

Statements of suitability for certain applications are based on our knowledge of typical operating conditions for such applications, but are not intended to constitute - and we specifically disclaim - any warranty concerning suitability for a specific customer application or use. This Information is intended for use only by customers who have the requisite experience and capability to determine the correct products for their application. Any technical advice inferred from this Information or otherwise provided by us with reference to the use of our products is given gratis, and we assume no obligation or liability for the advice given or results obtained.

© 2006 - 2020 KEMET