Littelfuse®

Expertise Applied | Answers Delivered

LF2103N

Half-Bridge Gate Driver

Features

- **Floating high-side driver in bootstrap operation to 600V**
- **Drives two N-channel MOSFETs or IGBTs in a half bridge configuration**
- **Designed for enhanced performance in noisy motor applications**
- **290mA source/600mA sink output current capability**
- **Outputs tolerant to negative transients**
- **Internal dead time of 420ns to protect MOSFETs**
- **Wide low side gate driver supply voltage: 10V to 20V**
- **Logic input (HIN and LIN*) 3.3V capability**
- **Schmitt triggered logic inputs**
- **Under Voltage Lockout (UVLO) for V_{CC} and V_{BS}**
- **Extended temperature range: -40°C to +125°C**

Description

The LF2103N is a high voltage, high speed gate driver capable of driving N-channel MOSFETs and IGBTs in a half bridge configuration. The high voltage technology enables the LF2103N high side to switch to 600V in a bootstrap operation.

LF2103N logic inputs are compatible with standard TTL and CMOS levels (down to 3.3V) to interface easily with controlling devices. The driver outputs feature high pulse current buffers designed for minimum driver cross conduction. LF2103N has a fixed internal deadtime of 420ns (typical).

LF2103N is offered in SOIC(N)-8 package and operates over the extended temperature range of -40 °C to +125 °C .

Applications

- Motor Controls
- DC-DC Converters
- AC-DC Inverters
- Motor Drives



SOIC(N)-8

Typical Application

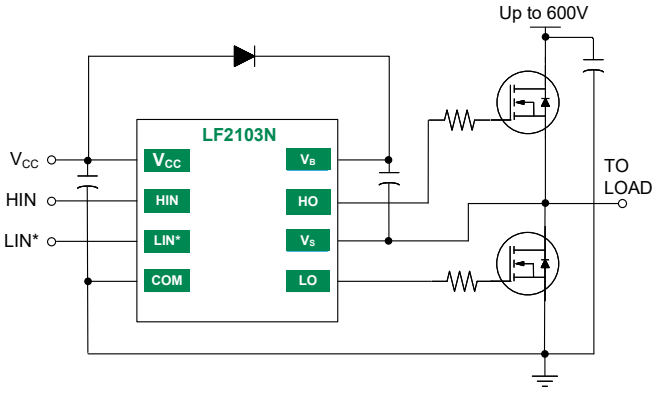

Ordering Information

Year Year Week Week

Part#	Package	Pack / Qty	Mark
LF2103NTR	SOIC(N)-8	T&R / 2500	YYWW LF2103N LOT ID

1 Specifications

1.1 Pin Diagrams

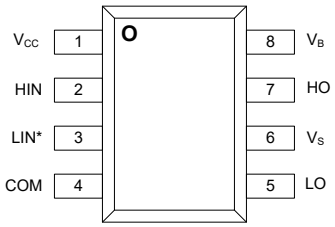

Top View: SOIC(N)-8

LF2103N

1.2 Pin Descriptions

Pin#	Pin Name	Pin Type	Pin Description
1	V_{CC}	Power	Logic and low side supply
2	HIN	Input	Logic input for high-side gate driver output in phase with HO
3	LIN*	Input	Logic input for low-side gate driver output out of phase with LO
4	COM	Power	Low-side and logic return
5	LO	Output	Low-side gate drive output
6	V_S	Power	High-side floating supply return
7	HO	Output	High-side gate drive output
8	V_B	Power	High-side floating supply

1.3 Absolute Maximum Ratings

Parameter	Symbol	Min	Max	Unit
High side floating supply voltage	V_B	-0.3	+624	V
High side floating supply offset voltage	V_S	V_B-24	V_B+0.3	V
High side floating output voltage	V_{HO}	V_S-0.3	V_B+0.3	V
Offset supply voltage transient	dV_S/dt	--	50	V/ns
Low side fixed supply voltage	V_{CC}	-0.3	+24	V
Low side output voltage	V_{LO}	-0.3	V_{CC}+0.3	V
Logic input voltage (HIN and LIN*)	V_{IN}	-0.3	V_{CC}+0.3	V
Package power dissipation	P_D	--	0.625	W
Junction Operating Temperature	T_J	--	+150	°C
Storage Temperature	T_{STG}	-55	+150	° C

Unless otherwise specified all voltages are referenced to COM . All electrical ratings are at T_A = 25 °C

Stresses beyond those listed under "Absolute Maximum Ratings" may cause permanent damage to the device. These are stress ratings only, and functional operation of the device at these or any other conditions beyond those indicated in the operational sections of the specifications is not implied. Exposure to absolute maximum rating conditions for extended periods may affect device reliability.

1.4 Thermal Characteristics

Parameter	Symbol	Rating	Unit
Junction to ambient	$\emptyset_{JA}$	200	°C/W

When mounted on a standard JEDEC 2-layer FR-4 board - JESD51-3

1.5 Recommended Operating Conditions

Parameter	Symbol	Min	Max	Unit
High side floating supply absolute voltage	V_B	V_S + 10	V_S + 20	V
High side floating supply offset voltage	V_S	***NOTE1***	600	V
High side floating output voltage	V_{HO}	V_S	V_B	V
Low side fixed supply voltage	V_{CC}	10	20	V
Low side output voltage	V_{LO}	0	V_{CC}	V
Logic input voltage (HIN and LIN*)	V_{IN}	0	5	V
Ambient temperature	T_A	-40	125	°C

Unless otherwise specified all voltages are referenced to COM

NOTE1 *High-side driver remains operational for V_S transients down to -5V*

1.6 DC Electrical Characteristics

V_{CC}= V_{BS} =15V, T_A = 25 °C and V_{COM} = 0V , unless otherwise specified.

*The V_{IN} and I_{IN} parameters are applicable to both logic input pins: HIN and LIN *. The V_0 and I_0 parameters are applicable to the respective output pins: HO and LO and are referenced to COM*

Parameter	Symbol	Conditions	Mln	Typ	Max	Unit
Logic "1" input voltage	V_{IH}	V_{CC} = 10V to 20V ***NOTE2***	2.5	--	--	V
Logic "0" input voltage	V_{IL}		--	--	0.8	
Logic input voltage hysteresis	$V_{IN(HYS)}$	--	--	0.3	--	
High level output voltage, V_{BIAS} - V_O	V_{OH}	I_O = 2mA	--	0.05	0.2	
Low level output voltage, V_O	V_{OL}	I_O = 2mA	--	0.02	0.1	
Offset supply leakage current	I_{LK}	VB = VS = 600V	--	--	50	µA
Quiescent V_{BS} supply current	I_{BSQ}	V_{IN} = 0V or 5V	--	60	100	
Quiescent V_{CC} supply current	I_{CCQ}	V_{IN} = 0V or 5V	--	350	500	
Logic "1" input bias current	I_{HIN+}	V_{IN} = 5V	--	3	10	
	I_{LIN*+}			--	5	
Logic "0" input bias current	I_{HIN-}	V_{IN} = 0V	--	--	5	
	I_{LIN*-}			3	10	
V_{CC} UVLO off positive going threshold	V_{CCUV+}	--	8.0	8.9	9.8	V
V_{CC} UVLO enable negative going threshold	V_{CCUV-}	--	7.4	8.2	9.0	
V_{CC} UVLO hysteresis	$V_{CCUV(HYS)}$	--	--	0.7	--	
V_{BS} UVLO off positive going threshold	V_{BSUV+}	--	4.5	5.5	6.5	
V_{BS} UVLO enable negative going threshold	V_{BSUV-}	--	4.2	5.2	6.2	
V_{BS} UVLO hysteresis	$V_{BSUV(HYS)}$	--	--	0.3	--	
Output high short circuit pulsed current	I_{O+}	V_O = 0V, t ≤ 10 µs	130	290	--	mA
Output low short circuit pulsed current	I_{O-}	V_O = 15V, t ≤ 10 µs	270	600	--	

NOTE2 *For optimal operation, it is recommended the input pulse (to HIN and LIN*) should have a minimum amplitude of 2.5V a minimum pulse width of 840ns .*

1.7 AC Electrical Characteristics

V_{CC}= V_{BS}= 15V, C_L = 1000pF, and T_A = 25 °C , unless otherwise specified.

Parameter	Symbol	Conditions	Min	Typ	Max	Unit
Turn-on propagation delay	t_{on}	V_S = 0V	--	680	820	ns
Turn-off propagation delay	t_{off}	V_S = 600V	--	150	220	
Propagation delay matching, HO & LO turn-on/turn-off	t_{DM}	--	--	--	60	
Turn-on rise time	t_r	V_S = 0V	--	70	170	
Turn-off fall time	t_f		--	35	90	
Deadtime: $t_{DT\ LO\text{-}HO}$ & $t_{DT\ HO\text{-}LO}$	t_{DT}	--	300	420	650	
Deadtime Matching	$t_{DT\ MT}$	--	--	--	60	

2 Functional Description

2.1 Functional Block Diagram

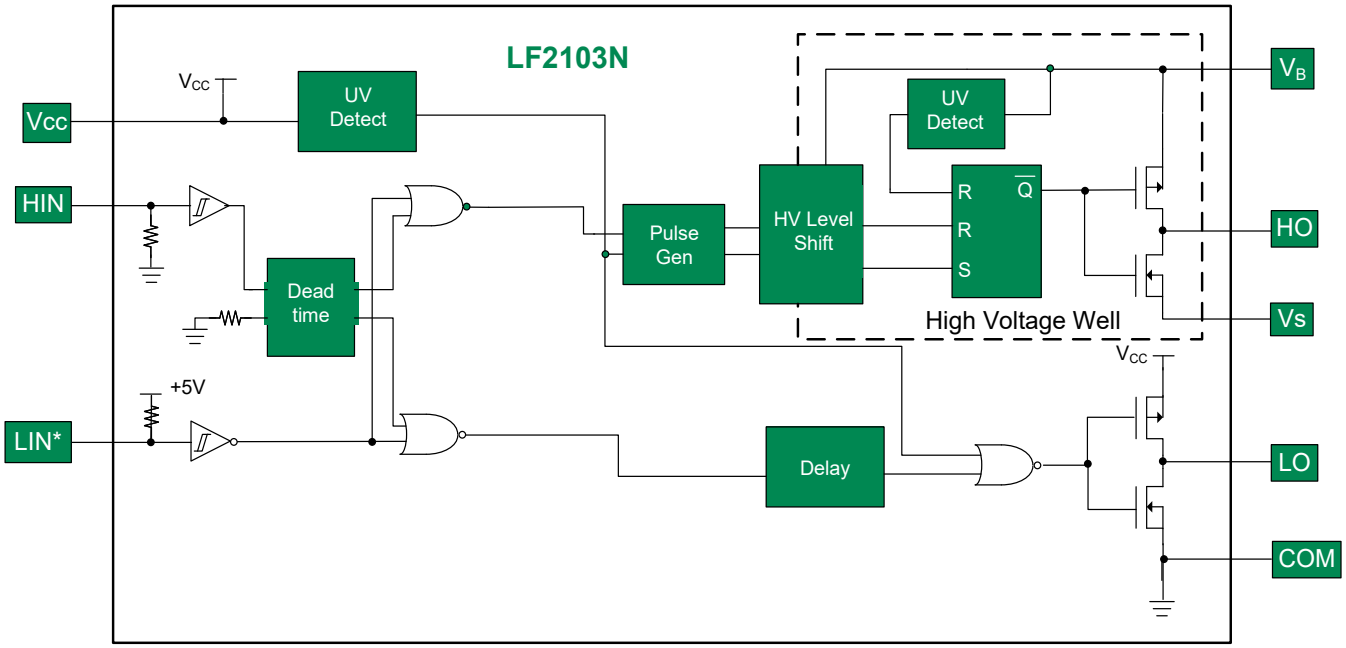

2.2 Timing Waveforms

Figure 1. Input / Output Logic Diagram

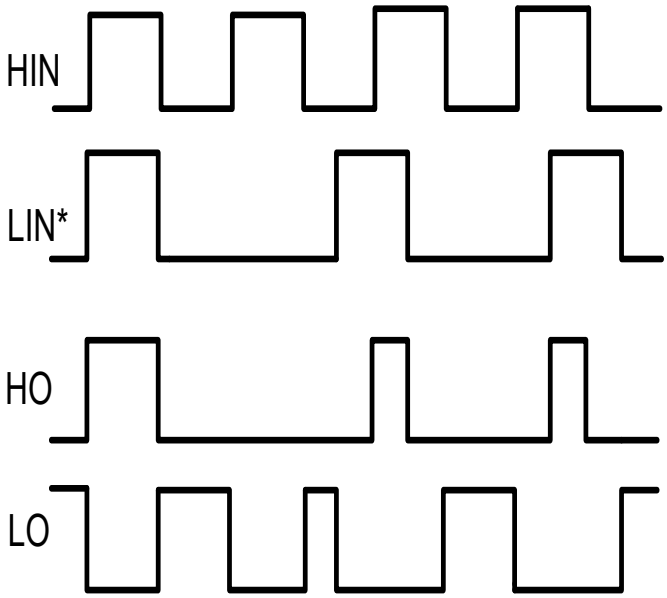

Figure 2. Input-to-Output delay timing diagram

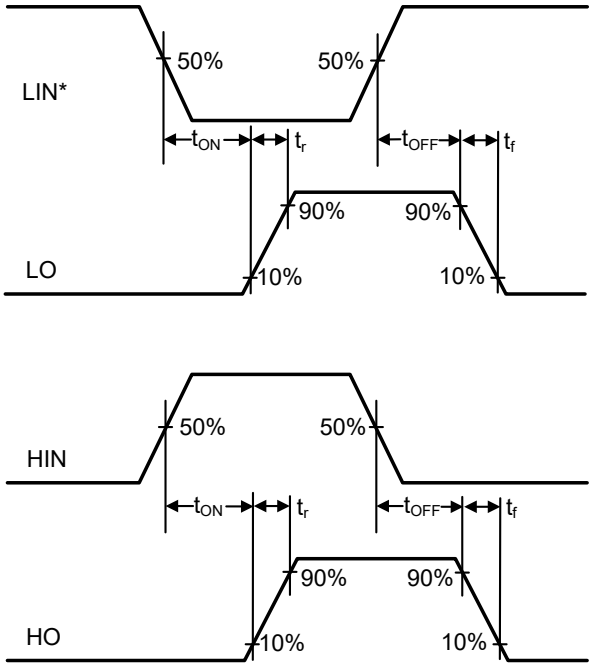

Figure 3. Deadtime Waveform Diagram

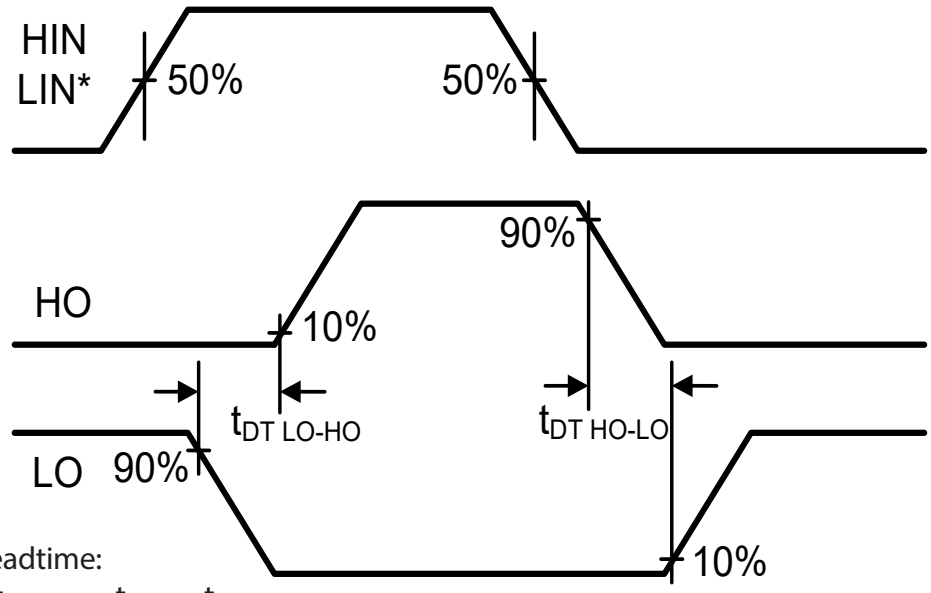

Deadtime:

$t_{DT\ LO\text{-}HO} = t_{ON\ HO} - t_{OFF\ LO}$

$t_{DT\ HO\text{-}LO} = t_{ON\ LO} - t_{OFF\ HO}$

Deadtime Matching : $t_{DT\ MT} = |t_{DT\ LO\text{-}HO} - t_{DT\ HO\text{-}LO}|$

Delay Matching :

$t_{DM\ OFF} = |t_{OFF\ LO} - t_{OFF\ HO}|$

$t_{DM\ ON} = |t_{ON\ LO} - t_{ON\ HO}|$

2.3 Application Information

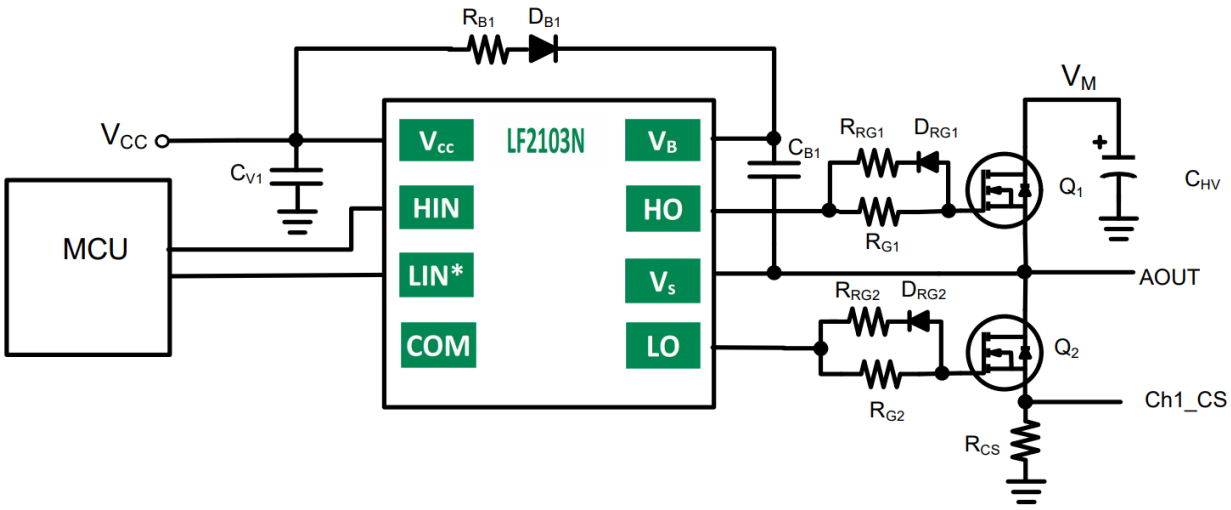

Figure 4. Single phase (of four) for Stepper motor driver application using the LF2103N

- RRG1 and RRG2 values are typically between 0Ω and 10Ω, exact value decided by MOSFET junction capacitance and drive current of gate driver; 10Ω is used in this example.

- It is **highly recommended** that the input pulse (to HIN and LIN*) should have a minimum amplitude of 2.5V (for V_{CC}=15V) with a minimum pulse width of 840ns.

- RG1 and RG2 values are typically between 20Ω and 100Ω, exact value decided by MOSFET junction capacitance and drive current of gate driver; 50Ω is used in this example.

- RB1 value is typically between 3Ω and 20Ω, exact value depending on bootstrap capacitor value and amount of current limiting required for bootstrap capacitor charging; 10Ω is used in this example. Also DB should be an ultra fast diode of 1A rating minimum and voltage rating greater than system operating voltage.

3 Manufacturing Information

3.1 Moisture Sensitivity



All plastic encapsulated semiconductor packages are susceptible to moisture ingression. Littelfuse Integrated Circuits Division classified all of its plastic encapsulated devices for moisture sensitivity according to the latest version of the joint industry standard, **IPC/JEDEC J-STD-020**, in force at the time of product evaluation. We test all of our products to the maximum conditions set forth in the standard, and guarantee proper operation of our devices when handled according to the limitations and information in that standard as well as to any limitations set forth in the information or standards referenced below.

Failure to adhere to the warnings or limitations as established by the listed specifications could result in reduced product performance, reduction of operable life, and/or reduction of overall reliability.

This product carries a **Moisture Sensitivity Level (MSL)** rating as shown below, and should be handled according to the requirements of the latest version of the joint industry standard **IPC/JEDEC J-STD-033.**

Device	Moisture Sensitivity Level (MSL) Classification
LF2103N	MSL3

3.2 ESD Sensitivity



This product is **ESD Sensitive**, and should be handled according to the industry standard **JESD-625**.

3.3 Reflow Profile

Provided in the table below is the IPC/JEDEC J-STD-020 Classification Temperature (T_C) and the maximum dwell time the body temperature of these surface mount devices may be (T_C - 5)°C or greater. The Classification Temperature sets the Maximum Body Temperature allowed for these devices during reflow soldering processes.

Device	Classification Temperature(Tc)	Dwell Time (tp)	Max Reflow Cycles
LF2103N	260°C	30 seconds	3







3.4 Board Wash

Littelfuse recommends the use of no-clean flux formulations. Board washing to reduce or remove flux residue following the solder reflow process is acceptable provided proper precautions are taken to prevent damage to the device. These precautions include but are not limited to: using a low pressure wash and providing a follow up bake cycle sufficient to remove any moisture trapped within the device due to the washing process. Due to the variability of the wash parameters used to clean the board, determination of the bake temperature and duration necessary to remove the moisture trapped within the package is the responsibility of the user (assembler). Cleaning or drying methods that employ ultrasonic energy may damage the device and should not be used. Additionally, the device must not be exposed to halide flux or solvents.

4 Package Dimensions: SOIC(N)-8

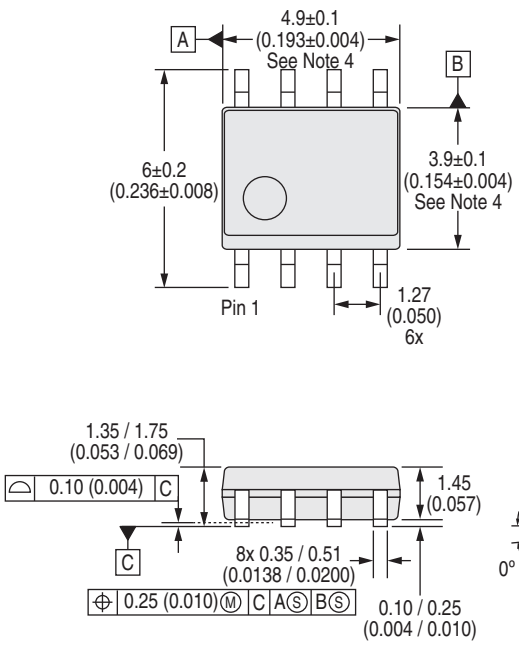

Recommended PCB Land Pattern

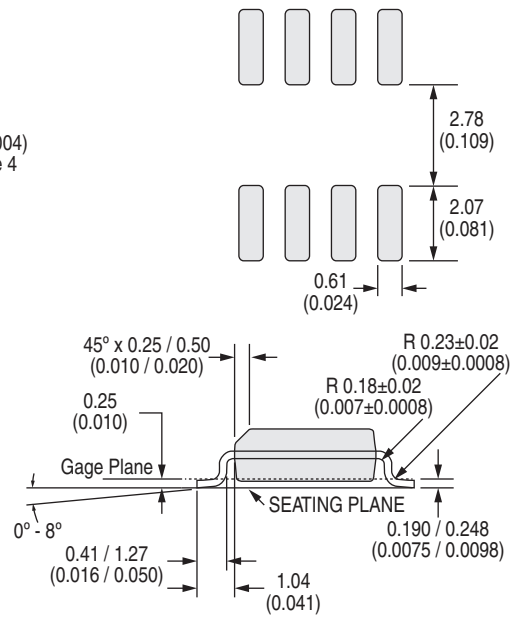

Notes: (Unless otherwise specified)
1. Controlling dimension: millimeters.
2. All dimensions are in mm (inches).
3. Reference JEDEC registration MS-012, variation AA.
4. Not including mold flash, protrusion, or gate burrs
   0.15 (0.006) maximum per end.

Dimensions:
Minimum / Maximum

Important Notice

Disclaimer Notice - Information furnished is believed to be accurate and reliable. However, users should independently evaluate the suitability of and test each product selected for their own applications. Littelfuse products are not designed for, and may not be used in, all applications. Read complete Disclaimer Notice at **https://www.littelfuse.com/disclaimer-electronics.**

Specification: DS-LF2103N-R01
©Copyright 2021, Littelfuse, Inc.
All rights reserved.
Printed in USA.
09 / 30 / 2021