Crystal Clock Oscillator Specification

Part No. + Packaging: ***LFSPXO056220Reel***

Customer Part:

Description

- Standard 2 x 1.6mm crystal oscillator in a hermetically sealed ceramic package with a seam sealed metal lid
- Model IQXO-542
- Model Issue number 4

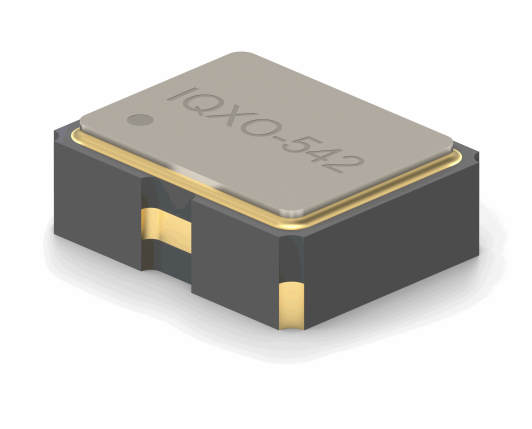

Frequency Parameters

- Frequency 27.0MHz
- Frequency Stability ±50.00ppm
- Operating Temperature Range -40.00 to 85.00°C
- Ageing ±5ppm max per year @ 25°C

Electrical Parameters

- Supply Voltage 1.8V ±10%
- Current Draw 5.000mA

Output Details

- Output Compatibility CMOS
- Drive Capability 15pF max
- Rise and Fall Time 5.0ns max
- Duty Cycle 45/55%
- Start up Time: 10ms max.
  1.1ms typ to 90% of final amplitude (Under ideal conditions @ 25°C)

Output Control

- Standby Operation: Logic '1' (≥70%Vs) to pad 1 enables oscillator output
  Logic '0' (≤30%Vs) to pad 1 disables oscillator output; when disabled the oscillator output goes to the high impedance state
  No connection to pad 1 enables oscillator output
- Standby Current: 10µA max, 0.6µA typ @ 25°C

Output Levels

- Output High (VoH): 90% of Vs min
  Output Low (VoL): 10% of Vs max

Environmental Parameters

- Impact: Weight of 10g dropped to centre of part from a height of 6mm
- Vibration: IEC 60068-2-6: 1.5mm amplitude, 10Hz-55Hz, 1min in 3 mutually perpendicular planes, duration 2hrs each plane (total 6hrs)
- Storage Temperature Range: –40 to 85°C
- RoHS Terminations
- RoHS Reflow Temp 250°C max for 10s max

Compliance

- RoHS Status (2015/863/EU) Compliant
- REACh Status Compliant
- MSL Rating (JDEC-STD-033): Not Applicable

Packaging Details

- Pack Style: Reel Tape & reel in accordance with EIA-481-D
  Pack Size: 1,000

Outline (mm)

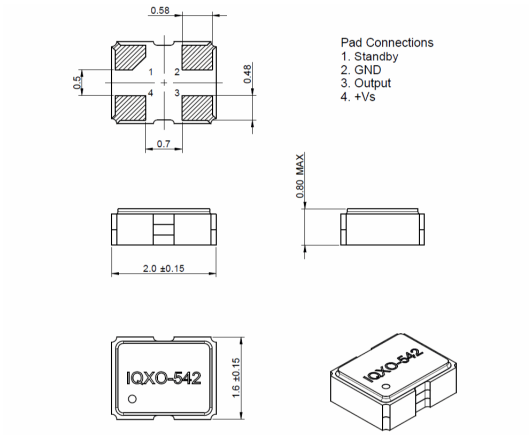

Test Circuit

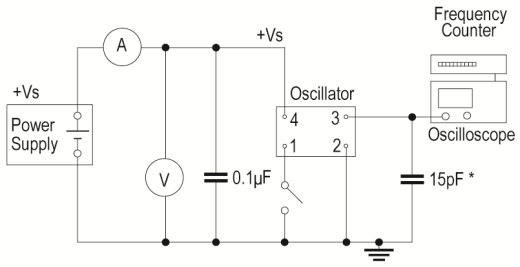

* Inclusive of jigging and equipment capacitance

Sales Office Contact Details:

UK: +44 (0)1460 270200

USA: +1.760 668 8935

Email: info@iqdfrequencyproducts.com

Web: www.iqdfrequencyproducts.com

Customer Part:

- *Alternative packing option available*

Test Circuit

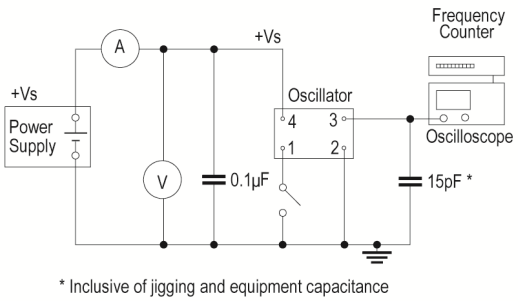

* Inclusive of jigging and equipment capacitance

Wave Form

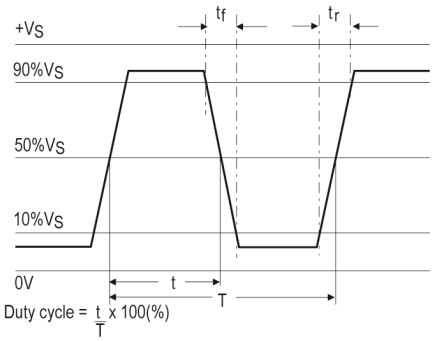

Sales Office Contact Details:
UK: +44 (0)1460 270200
USA: +1.760 668 8935
Email: info@iqdfrequencyproducts.com
Web: www.iqdfrequencyproducts.com