Ribbon Cable connector Compliant with MIL Standard

HIF3B Series

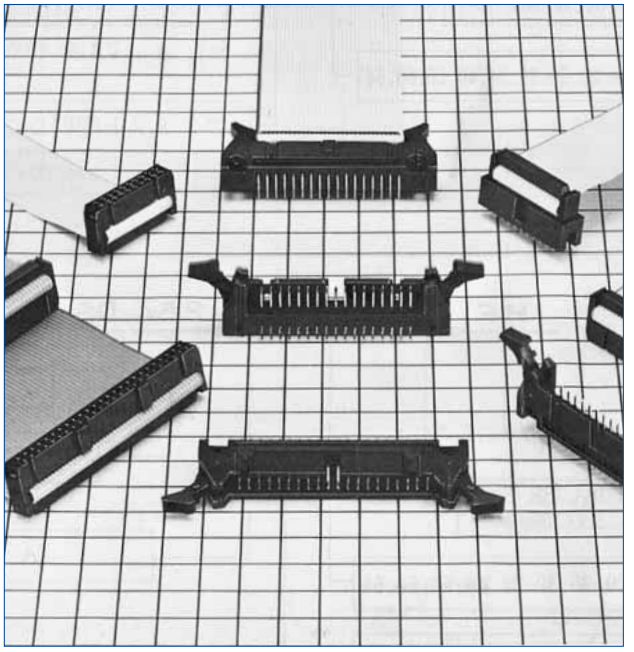

■Features

1. Product Compliant with MIL Standard

HIF3B series has been developed as a product compliant with MIL standard, and used for wide applications.

2. UL Approval Product

HIF3B series connectors are UL approved.

3. Mechanism to Prevent Mis-insertion

This connector is equipped with the mechanism to prevent Mis-insertion as follows.

① The system provides the convex area to insert the guide-key on the pin header side, and to guide it in combination with the socket convex area (MIL standard).

② The system embeds and guides the polarizing key in the socket holes.

4. Applicable Cable 28 AWG (IDC type)

The applicable cable is UL2651 28 AWG flat cable (7cores./0.127mm, jacket dia. 0.9±0.1mm).

■Product Specifications

Rating	Current rating : IDC : 1A 28 AWG Crimp : 32, 36 AWG : 1A Other : 3A	Operating Temperature Range : –55 to +85℃ (Note 1)	Storage Temperature Range : –10 to +60℃ (Note 2)
	Voltage rating : 200V	Operating Moisture Range : 40 to 80%	Storage Humidity Range : 40 to 70% (Note 2)

Item	Specification	Condition
1. Insulation Resistance	1000MΩ min.	500V DC
2. Withstanding voltage	No flashover or insulation breakdown.	650V AC/1 minute
3. Contact Resistance	15mΩ max.	0.1A
4. Vibration	No electrical discontinuity of 1μs or more	Frequency : 10 to 55 Hz, single amplitude of 0.75 mm, 2 hours in each of the 3 directions.
5. Humidity (Steady state)	Insulation resistance : 1000MΩ min.	96 hours at temperature of 40℃ and humidity of 90% to 95%
6. Temperature Cycle	No damage, cracks, or parts looseness.	(-55℃ : 30 minutes → 15 to 35℃ : 5 minutes max. 125℃ : 30 minutes → 15 to 35℃ : 5 minutes max.) 5 cycles
7. Durability (Mating/un-mating)	Contact resistance : 15mΩ max.	500 cycles
8. Resistance to Soldering heat	No deformation of components affecting performance.	Solder bath : 260℃ for 10 seconds
		Manual soldering : 360℃ for 5 seconds

Note 1 : Includes temperature rise caused by current flow.
Note 2 : The term "storage" refers to products stored for long period of time prior to mounting and use. Operating Temperature Range and Humidity range covers non conducting condition of installed connectors in storage, shipment or during transportation.
Note 3 : Information contained in this catalog represents general requirements for this Series. Contact us for the drawings and specifications for a specific part number shown.
Note 4 : Please note that there is a risk of deforming the lock when an excessive load is applied to the inside.

■Material / Finish

Part	Material	Finish		Remarks
Insulator	PBT	Black		UL94V-0
Socket Contact	Beryllium copper	Connection area	Gold plated	————
Pin header contact	Brass	Selective Gold plated		————

Dec.1.2023 Copyright 2023 HIROSE ELECTRIC CO., LTD. All Rights Reserved.

■Product Number Structure

Refer to the chart below when determining the product specifications from the product number.
Please select from the product numbers listed in this catalog when placing orders.

●Socket

HIF ❶ 3B ❷ - ＊ ❸ D ❹ - 2.54 ❺ R ❻

❶ Series Name	: HIF
❷ Series No.	: 3B, 3BA, 3BB (50, 60, 64 contacts only)
❸ Number of contacts	: 6,10,14,16, 20, 26, 30, 34, 40, 50, 60, 64
❹ Contact alignment	: D : Double
❺ Contact pitch	: 2.54mm
❻ Connection type	R : ID type

●Pin Header

HIF ❶ 3B ❷ - ＊ ❸ P ❹ A ❺ - 2.54 ❻ DS ❼

❶ Series Name	: HIF	
❷ Series No.	:	
	3B : (14 contacts not included)	3BC : (10 contacts only)
	3BA, 3BB : (50, 60, 64 contacts only)	3BD : (10 contacts only)
❸ Number of contacts	: 6,10,14,16, 20, 26, 30, 34, 40, 50, 60, 64	
❹ P	: Pin header	
❺ A	: Selective gold plated	
❻ Contact pitch	: 2.54mm	
❼ Contact style		
DS	: Right angle type	
DSA	: Straight type	

Dec.1.2023 Copyright 2023 HIROSE ELECTRIC CO., LTD. All Rights Reserved.

■Socket (With guide to prevent mis-insertion)

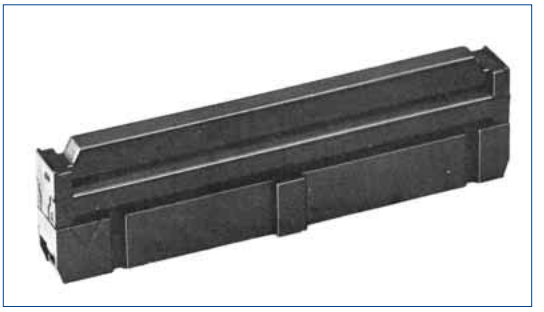

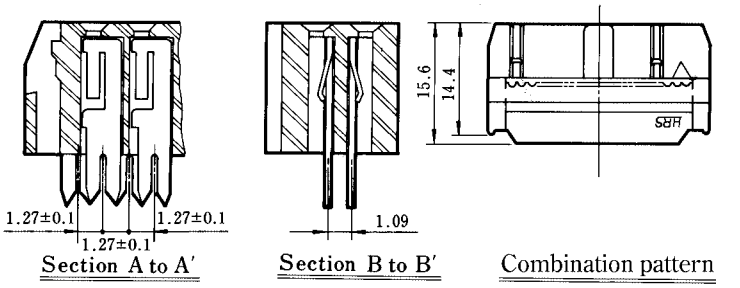

Body

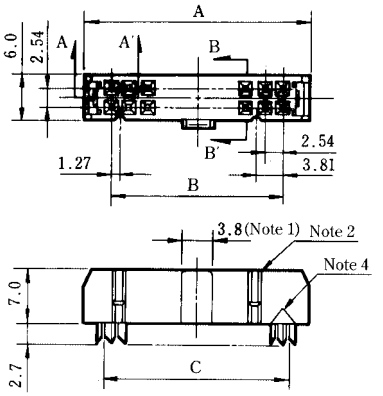

Protector

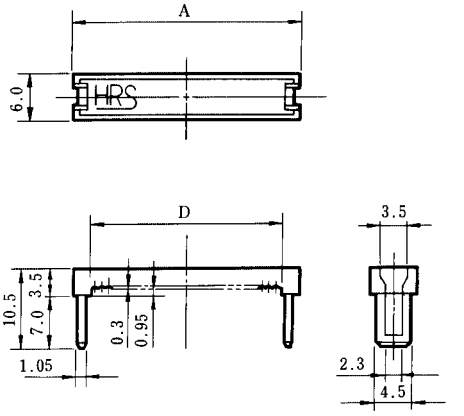

Clamp

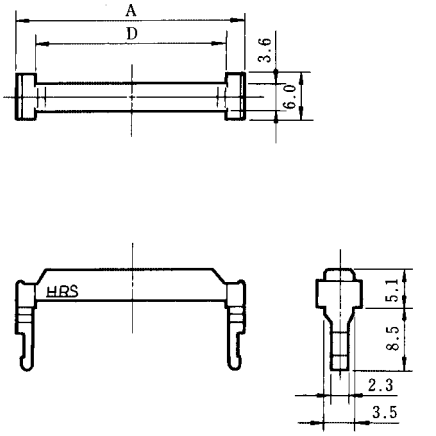

Note1, Note2 : The number of polarizing keys and polarizing keyways changes according to products. Refer to the list as shown below.
Note3 : The 50, 60 and 64 contact connector contain two types of polarizing guides. Use the products, referring to Notes 1 and 2.
Note4 : The 6 contact has no polarizing mark.

Unit : mm

	Part No.	HRS No.	No. of Contacts	A	B	C	D	Polarizing Guide (Note 1)	Polarizing Keyway (Note 2)	RoHS
	HIF3BA- 6D-2.54R(63)	610-0032-3 63	6	12.19	5.08	6.35	7.72	One at center	None	YES
	HIF3BA-10D-2.54R(63)	610-0021-7 63	10	17.27	10.16	11.43	12.8		One on left side	
★	HIF3BA-14D-2.54R(63)	610-0022-0 63	14	22.35	15.24	16.51	17.88			
★	HIF3BA-16D-2.54R(63)	610-0023-2 63	16	24.89	17.78	19.05	20.42		One on right and left sides, resp.	
★	HIF3BA-20D-2.54R(63)	610-0024-5 63	20	29.97	22.86	24.13	25.5			
★	HIF3BA-26D-2.54R(63)	610-0025-8 63	26	37.59	30.48	31.75	33.12			
★	HIF3BA-30D-2.54R(63)	610-0026-0 63	30	42.67	35.56	36.83	38.2			
★	HIF3BA-34D-2.54R(63)	610-0027-3 63	34	47.75	40.64	41.91	43.28			
★	HIF3BA-40D-2.54R(63)	610-0028-6 63	40	55.37	48.26	49.53	50.9			
★	HIF3BA-50D-2.54R(63)	610-0029-9 63	50	68.07	60.96	62.23	63.6	One on right and left sides, resp.		
★	HIF3BB-50D-2.54R(63)	610-0041-4 63	50	68.07	60.96	62.23	63.6	One at center		
★	HIF3BA-60D-2.54R(63)	610-0030-8 63	60	80.77	73.66	74.93	76.3	One on right and left sides, resp.		
★	HIF3BB-60D-2.54R(63)	610-0042-7 63	60	80.77	73.66	74.93	76.3	One at center		
★	HIF3BA-64D-2.54R(63)	610-0031-0 63	64	85.85	78.74	80.01	81.38	One on right and left sides, resp.		
★	HIF3BB-64D-2.54R(63)	610-0043-0 63	64	85.85	78.74	80.01	81.38	One at center		

The products marked with ★ comply with MIL standard.

Dec.1.2023 Copyright 2023 HIROSE ELECTRIC CO., LTD. All Rights Reserved.

■Socket

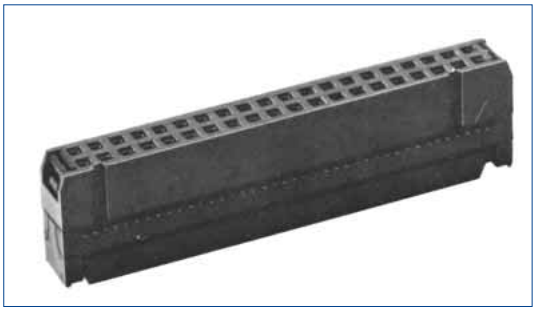

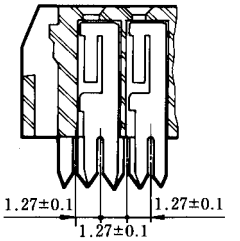

Section A to A'

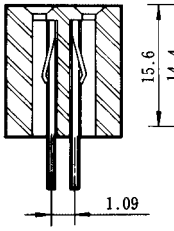

Section B to B'

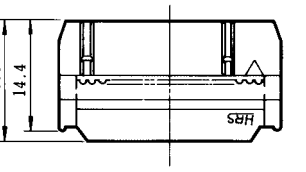

Combination pattern

Body

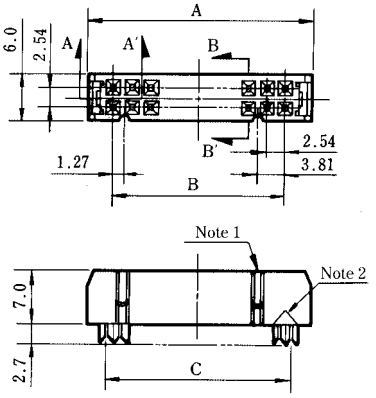

Protector

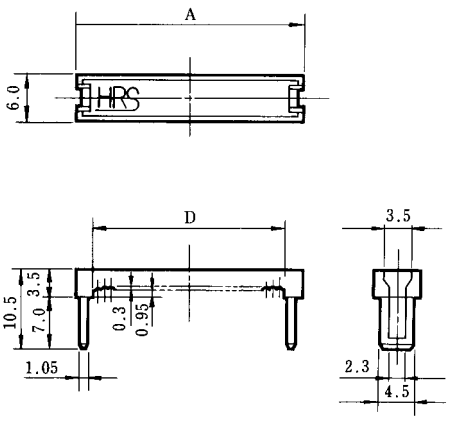

Clamp

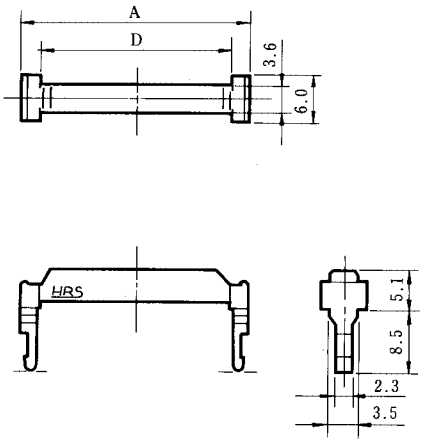

Note1 : The number of polarizing keys and polarizing keyways changes according to products. For details, refer to the list as shown below.
Note2 : The 6 contact has no polarizing mark.

Unit : mm

	Part No.	HRS No.	No. of Contacts	A	B	C	D	Polarizing Guide (Note 1)	RoHS
	HIF3B- 6D-2.54R(63)	610-0012-6 63	6	12.19	5.08	6.35	7.72	None	YES
★	HIF3B-10D-2.54R(63)	610-0001-0 63	10	17.27	10.16	11.43	12.80	One on left side	
★	HIF3B-14D-2.54R(63)	610-0002-2 63	14	22.35	15.24	16.51	17.88		
★	HIF3B-16D-2.54R(63)	610-0003-5 63	16	24.89	17.78	19.05	20.42	One on right and left sides, resp.	
★	HIF3B-20D-2.54R(63)	610-0004-8 63	20	29.97	22.86	24.13	25.50		
★	HIF3B-26D-2.54R(63)	610-0005-0 63	26	37.59	30.48	31.75	33.12		
★	HIF3B-30D-2.54R(63)	610-0006-3 63	30	42.67	35.56	36.83	38.2		
★	HIF3B-34D-2.54R(63)	610-0007-6 63	34	47.75	40.64	41.91	43.28		
★	HIF3B-40D-2.54R(63)	610-0008-9 63	40	55.37	48.26	49.53	50.90		
★	HIF3B-50D-2.54R(63)	610-0009-1 63	50	68.07	60.96	62.23	63.6		
★	HIF3B-60D-2.54R(63)	610-0010-0 63	60	80.77	73.66	74.93	76.3		
★	HIF3B-64D-2.54R(63)	610-0011-3 63	64	85.85	78.74	80.01	81.38		

The products marked with ★ comply with MIL standard.

Dec.1.2023 Copyright 2023 HIROSE ELECTRIC CO., LTD. All Rights Reserved.

■Four Wall Angle Through hole

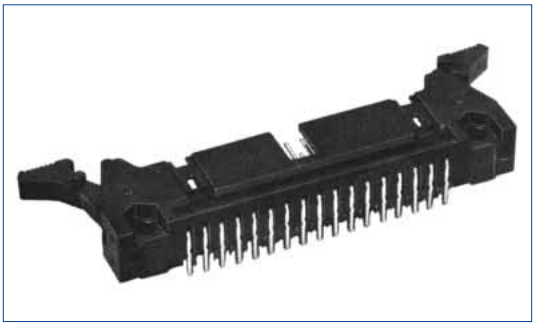

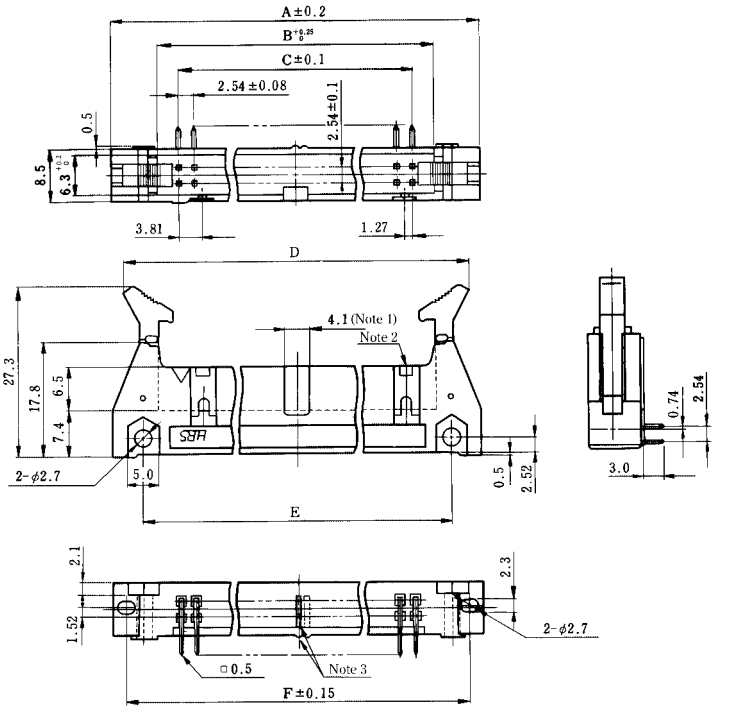

◆PCB mounting pattern

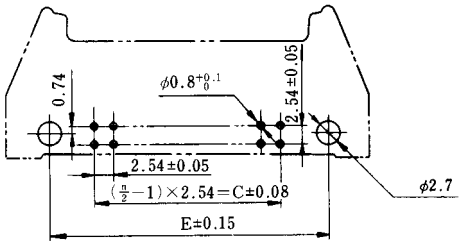

■n=number of contacts

Note 1, Note 2 : The number of polarizing slot and key installed positions changes according to products. Refer to the list as shown below.
Note 3 : The spacer moves to the right according to the number of contacts.
Note 4 : The 10, 50, 60 and 64 contact connectors contain two types of polarizing slots.
Use products, referring to (Note 1) (Note 2).

Unit : mm

	Part No.	HRS No.	No. of Contacts	A	B	C	D	E	F	Polarizing Slot (Note 1)	Polarizing Key Install (Note 2)	RoHS
★	HIF3BA-10PA-2.54DS(63)	610-0091-2 63	10	32.0	17.5	10.16	28.14 MAX51.1	21.8	27.9	None	One on right side	YES
	HIF3BD-10PA-2.54DS(63)	610-0171-0 63	10	32.0	17.5	10.16	28.14 MAX51.1	21.8	27.9	One at center	None	
★	HIF3BA-14PA-2.54DS(63)	610-0092-5 63	14	37.1	22.6	15.24	33.24 MAX56.2	26.9	33.0		One on right side	
★	HIF3BA-16PA-2.54DS(63)	610-0093-8 63	16	39.6	25.1	17.78	35.74 MAX58.7	29.5	35.5		One on right and left sides, resp.	
★	HIF3BA-20PA-2.54DS(63)	610-0094-0 63	20	44.7	30.2	22.86	40.84 MAX63.8	34.5	40.6			
★	HIF3BA-26PA-2.54DS(63)	610-0095-3 63	26	52.3	37.8	30.48	48.44 MAX71.4	42.2	48.3			
★	HIF3BA-30PA-2.54DS(63)	610-0096-6 63	30	57.4	42.9	35.56	53.54 MAX76.5	47.2	53.3			
★	HIF3BA-34PA-2.54DS(63)	610-0097-9 63	34	62.5	48.0	40.64	58.64 MAX81.6	52.3	58.4			
★	HIF3BA-40PA-2.54DS(63)	610-0098-1 63	40	70.1	55.6	48.26	66.24 MAX89.2	59.9	66.0			
★	HIF3BA-50PA-2.54DS(63)	610-0099-4 63	50	82.8	68.3	60.96	78.94 MAX101.9	72.6	78.7	One on right and left sides, resp.		
★	HIF3BB-50PA-2.54DS(63)	610-0131-5 63	50	82.8	68.3	60.96	78.94 MAX101.9	72.6	78.7	One at center		
★	HIF3BA-60PA-2.54DS(63)	610-0100-1 63	60	95.5	81.0	73.66	91.64 MAX114.6	85.3	91.4	One on right and left sides, resp.		
★	HIF3BB-60PA-2.54DS(63)	610-0132-8 63	60	95.5	81.0	73.66	91.64 MAX114.6	85.3	91.4	One at center		
★	HIF3BA-64PA-2.54DS(63)	610-0101-4 63	64	100.6	86.1	78.74	96.74 MAX119.7	90.4	96.5	One on right and left sides, resp.		
★	HIF3BB-64PA-2.54DS(63)	610-0133-0 63	64	100.6	86.1	78.74	96.74 MAX119.7	90.4	96.5	One at center		

The products marked with ★ comply with MIL standard.

Dec.1.2023 Copyright 2023 HIROSE ELECTRIC CO., LTD. All Rights Reserved.

■Four-Wall Straight Through hole

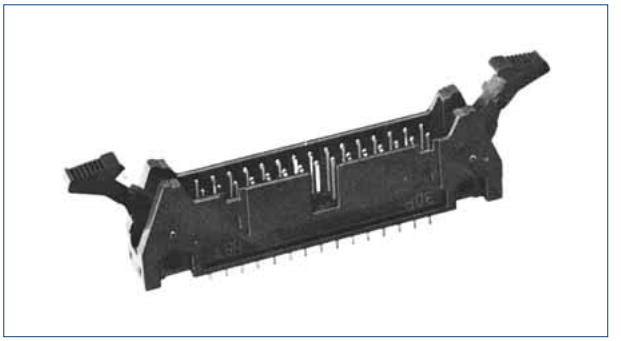

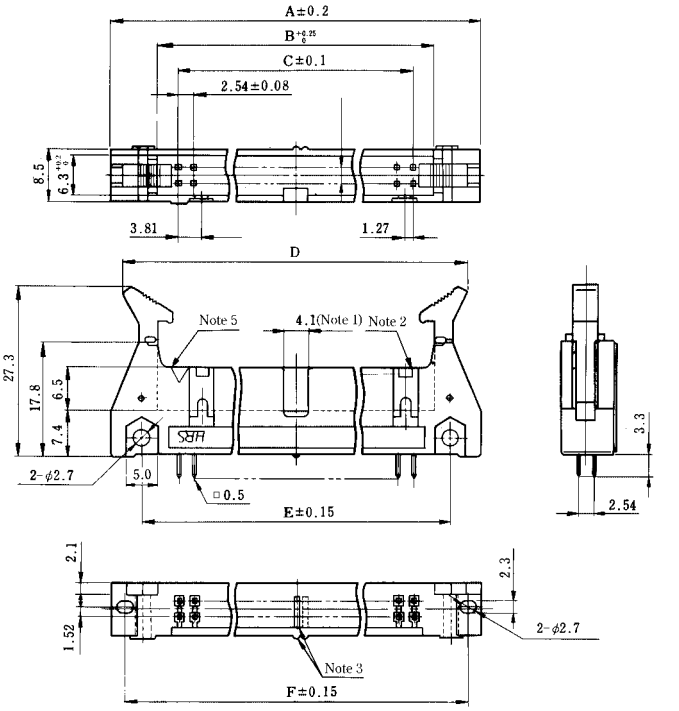

◆PCB mounting pattern

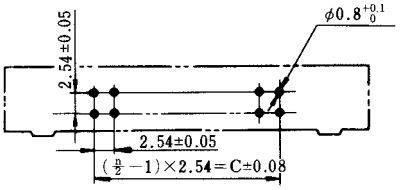

■n=number of contacts

Note 1, Note 2 : The number of polarizing slot and key installed positions changes according to products. Refer to the list as shown below.
Note 3 : The spacer moves to the right according to the number of contacts.
Note 4 : The 10, 50, 60 and 64 contact connectors contain two types of polarizing slots.
Use products, confirming (Note 1) (Note 2).
Note 5 : The 6 contact has no polarity mark.

Unit : mm

	Part No.	HRS No.	No. of Contacts	A	B	C	D	E	F	Polarizing Slot (Note 1)	Polarizing Key Install (Note 2)	RoHS
★	HIF3-6PA-2.54DSA(71)	562-0503-9 71	6	26.92	12.42	5.08	23.06 MAX46.02	16.7	22.82	One at center	None	YES
	HIF3BA-10PA-2.54DSA(63)	610-0111-8 63	10	32.0	17.5	10.16	28.14 MAX51.1	21.8	27.9	None	One on right side	
★	HIF3BD-10PA-2.54DSA(63)	610-0181-3 63	10	32.0	17.5	10.16	28.14 MAX51.1	21.8	27.9	One at center	None	
★	HIF3BA-14PA-2.54DSA(63)	610-0112-0 63	14	37.1	22.6	15.24	33.24 MAX56.2	26.9	33.0		One on right side	
★	HIF3BA-16PA-2.54DSA(63)	610-0113-3 63	16	39.6	25.1	17.78	35.74 MAX58.7	29.5	35.5		One on right and left sides, resp.	
★	HIF3BA-20PA-2.54DSA(63)	610-0114-6 63	20	44.7	30.2	22.86	40.84 MAX63.8	34.5	40.6			
★	HIF3BA-26PA-2.54DSA(63)	610-0115-9 63	26	52.3	37.8	30.48	48.44 MAX71.4	42.2	48.3			
★	HIF3BA-30PA-2.54DSA(63)	610-0116-1 63	30	57.4	42.9	35.56	53.54 MAX76.5	47.2	53.3			
★	HIF3BA-34PA-2.54DSA(63)	610-0117-4 63	34	62.5	48.0	40.64	58.64 MAX81.6	52.3	58.4			
★	HIF3BA-40PA-2.54DSA(63)	610-0118-7 63	40	70.1	55.6	48.26	66.24 MAX89.2	59.9	66.0			
★	HIF3BA-50PA-2.54DSA(63)	610-0119-0 63	50	82.8	68.3	60.96	78.94 MAX101.9	72.6	78.7	One on right and left sides, resp.		
★	HIF3BB-50PA-2.54DSA(63)	610-0141-9 63	50	82.8	68.3	60.96	78.94 MAX101.9	72.6	78.7	One at center		
★	HIF3BA-60PA-2.54DSA(63)	610-0120-9 63	60	95.5	81.0	73.66	91.64 MAX114.6	85.3	91.4	One on right and left sides, resp.		
★	HIF3BB-60PA-2.54DSA(63)	610-0142-1 63	60	95.5	81.0	73.66	91.64 MAX114.6	85.3	91.4	One at center		
★	HIF3BA-64PA-2.54DSA(63)	610-0121-1 63	64	100.6	86.1	78.74	96.74 MAX119.7	90.4	96.5	One on right and left sides, resp.		
★	HIF3BB-64PA-2.54DSA(63)	610-0143-4 63	64	100.6	86.1	78.74	96.74 MAX119.7	~~90.4~~	96.5	One at center		

The products marked with ★ comply with MIL standard.

Dec.1.2023 Copyright 2023 HIROSE ELECTRIC CO., LTD. All Rights Reserved.

■Three Wall Angle Type

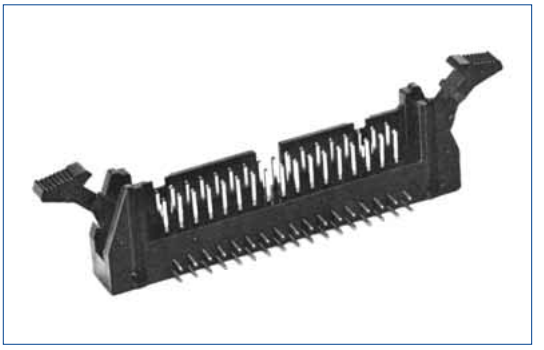

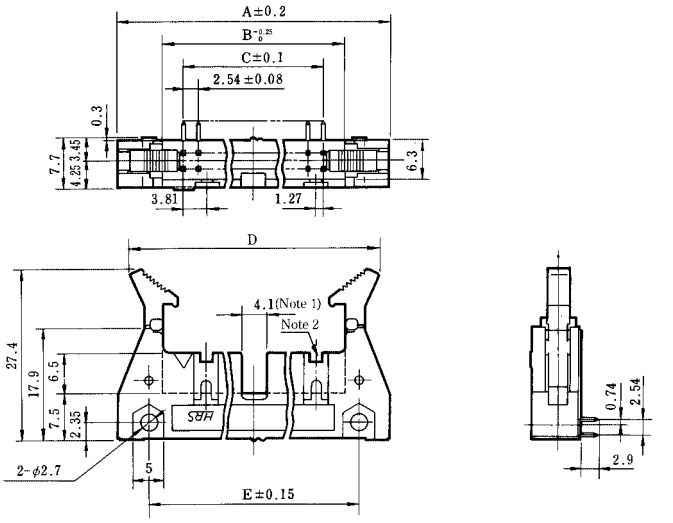

◆PCB mounting pattern

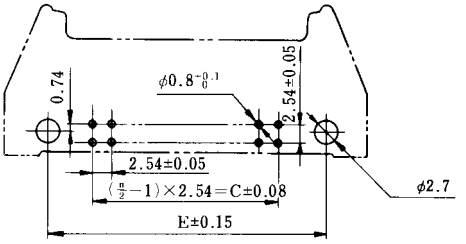

■n=number of contacts

Note 1, Note 2 : The number of polarizing slot and key installed positions changes according to products. Refer to the list as shown below.
Note 3 : The spacer moves according to the number of contacts.
Note 4 : The 10 contact connector consists of two types. Use products, confirming (Note 1) (Note 2).

Unit : mm

	Part No.	HRS No.	No. of Contacts	A	B	C	D	E	F	Polarizing Slot (Note 1)	Polarizing Key Install (Note 2)	RoHS
★	HIF3B -10PA-2.54DS(63)	610-0051-8 63	10	32.0	17.5	10.16	28.14 / MAX51.1	21.8	27.9	None	One on right side	YES
	HIF3BC-10PA-2.54DS(63)	610-0151-2 63	10	32.0	17.5	10.16	28.14 / MAX51.1	21.8	27.9	One at center	None	
★	HIF3B -16PA-2.54DS(63)	610-0052-0 63	16	39.6	25.1	17.78	35.74 / MAX58.7	29.5	35.5		One on right and left sides, resp.	
★	HIF3B -20PA-2.54DS(63)	610-0053-3 63	20	44.7	30.2	22.86	40.84 / MAX63.8	34.5	40.6			
★	HIF3B -26PA-2.54DS(63)	610-0054-6 63	26	52.3	37.8	30.48	48.44 / MAX71.4	42.2	48.3			
★	HIF3B -30PA-2.54DS(63)	610-0055-9 63	30	57.4	42.9	35.56	53.54 / MAX76.5	47.2	53.3			
★	HIF3B -34PA-2.54DS(63)	610-0056-1 63	34	62.5	48.0	40.64	58.64 / MAX81.6	52.3	58.4			
★	HIF3B -40PA-2.54DS(63)	610-0057-4 63	40	70.1	55.6	48.26	66.24 / MAX89.2	59.9	66.0			
★	HIF3B -50PA-2.54DS(63)	610-0058-7 63	50	82.8	68.3	60.96	78.94 / MAX101.9	72.6	78.7	One on right and left sides, resp.		
★	HIF3B -60PA-2.54DS(63)	610-0059-0 63	60	95.5	81.0	73.66	91.64 / MAX114.6	85.3	91.4			
★	HIF3B -64PA-2.54DS(63)	610-0060-9 63	64	100.6	86.1	78.74	96.74 / MAX119.7	90.4	96.5			

The products marked with ★ comply with MIL standard.

Dec.1.2023 Copyright 2023 HIROSE ELECTRIC CO., LTD. All Rights Reserved.

■Four Wall Straight Through hole

[Flux Blister Prevention Type]

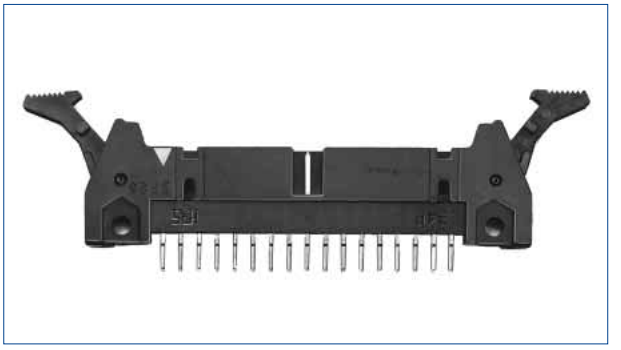

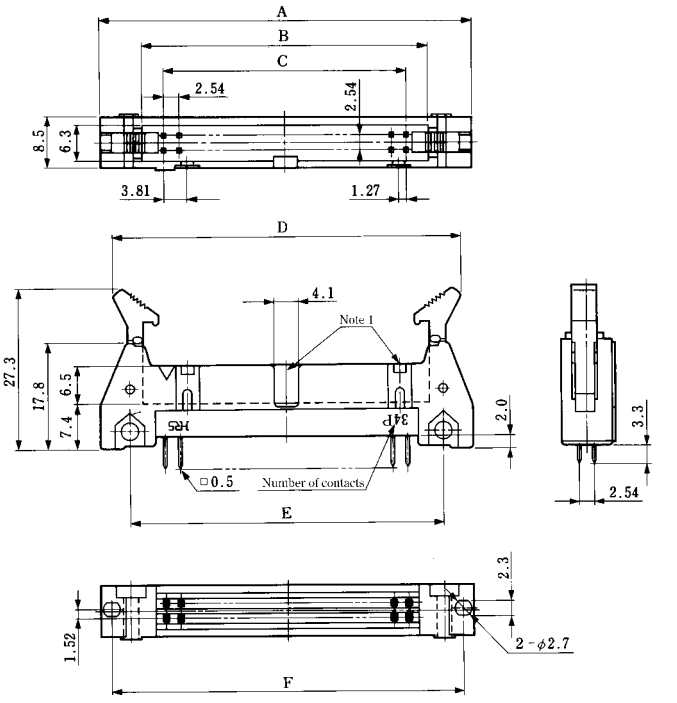

◆PCB mounting pattern

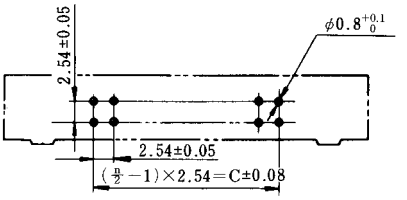

■n=number of contacts

Note1 : The number of polarizing slot and key installed positions changes according to products. Refer to the list as shown below.

Unit : mm

	Part No.	HRS No.	No. of Contacts	A	B	C	D	E	F	Polarizing Slot	Polarizing Key Install	RoHS
★	HIF3CA-10PA-2.54DSA(63)	610-0701-1 63	10	32.0	17.5	10.16	28.14 MAX51.1	21.8	27.9	None	One on right side	YES
	HIF3CD-10PA-2.54DSA(63)	610-0722-1 63	10	32.0	17.5	10.16	28.14 MAX51.1	21.8	27.9	One at center	None	
★	HIF3CA-16PA-2.54DSA(63)	610-0703-7 63	16	39.6	25.1	17.78	35.74 MAX58.7	29.5	35.5		One on right and left sides, resp.	
★	HIF3CA-20PA-2.54DSA(63)	610-0704-0 63	20	44.7	30.2	22.86	40.84 MAX63.8	34.5	40.6			
★	HIF3CA-26PA-2.54DSA(63)	610-0705-2 63	26	52.3	37.8	30.48	48.44 MAX71.4	42.2	48.3			
★	HIF3CA-30PA-2.54DSA(63)	610-0706-5 63	30	57.4	42.9	35.56	53.54 MAX76.5	47.2	53.3			
★	HIF3CA-34PA-2.54DSA(63)	610-0707-8 63	34	62.5	48.0	40.64	58.64 MAX81.6	52.3	58.4			
★	HIF3CA-40PA-2.54DSA(63)	610-0708-0 63	40	70.1	55.6	48.26	66.24 MAX89.2	59.9	66.0			
★	HIF3CA-50PA-2.54DSA(63)	610-0709-3 63	50	82.8	68.3	60.96	78.94 MAX101.9	72.6	78.7	One on right and left sides, resp.		
★	HIF3CB-50PA-2.54DSA(63)	610-0721-9 63	50	82.8	68.3	60.96	78.94 MAX101.9	72.6	78.7	One at center		
★	HIF3CB-60PA-2.54DSA(63)	610-0723-4 63	60	95.5	81.0	73.66	91.64 MAX114.6	85.3	91.4			
★	HIF3CB-64PA-2.54DSA(63)	610-0724-7 63	64	100.6	86.1	78.74	96.74 MAX119.7	90.4	96.5			

The products marked with ★ comply with MIL standard.

Dec.1.2023 Copyright 2023 HIROSE ELECTRIC CO., LTD. All Rights Reserved.

◆Polarizing Key

HIF3B-GK
562-0601-8



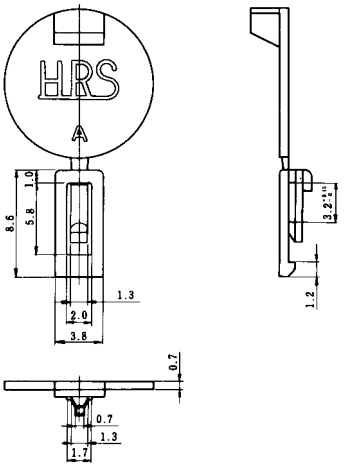

HIF3-GPIN(A)

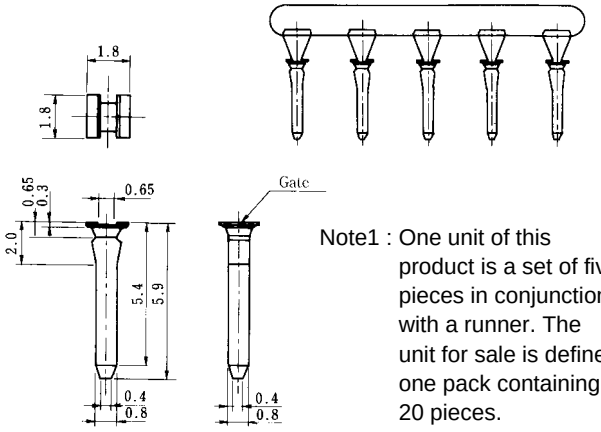

Note1 : One unit of this product is a set of five pieces in conjunction with a runner. The unit for sale is defined one pack containing 20 pieces.
Note2 : This product is applicable to HIF3A-∗D2.54R, HIF3C-∗D2.54C and HIF3BA-∗D2.54C products.

HIF3BA-GPIN

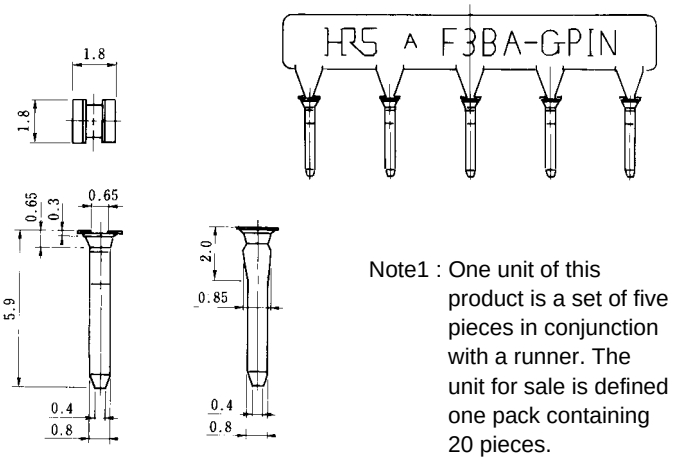

Note1 : One unit of this product is a set of five pieces in conjunction with a runner. The unit for sale is defined one pack containing 20 pieces.
Note2 : This product is applicable to the HIF3BA-∗D2.54R product.

Part No.	HRS No.	Material	Remarks	RoHS
HIF3-GPIN(A)	562-0126-6	Poly acetal (white)	A set of 5 pieces	YES

Part No.	HRS No.	Material	Remarks	RoHS
HIF3BA-GPIN	612-0500-2	Poly acetal (white)	A set of 5 pieces	YES

Dec.1.2023 Copyright 2023 HIROSE ELECTRIC CO., LTD. All Rights Reserved.

◆Lock

●Low Profile Lock Pin Header

Lock G
Part Number : HIF3BAG-✻✻PA-2.54DSA(63)
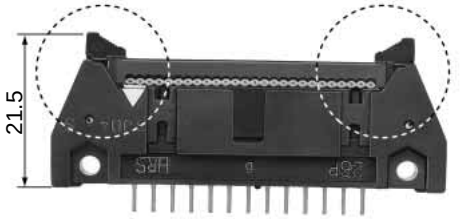
●Low profile type, and used for lock ejection. Connector height is reduced. Since no connector clamp is needed on the cable side, this is used without turning back on the cable side. Take care about this point.

●F Type Lock Pin Header

Lock F
Part Number : HIF3BAG-✻✻PA-2.54DSA(63)
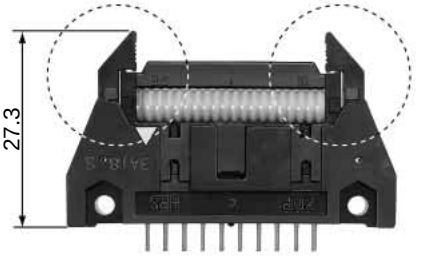
●Locking range more reduced than conventional lock type. Even if connectors are aligned laterally, the mounting space is reduced. Note : The clamp must be replaced for HIF3A socket type 60 contacts only. Take care about this point.

Dec.1.2023 Copyright 2023 HIROSE ELECTRIC CO., LTD. All Rights Reserved.

■Socket for Crimping



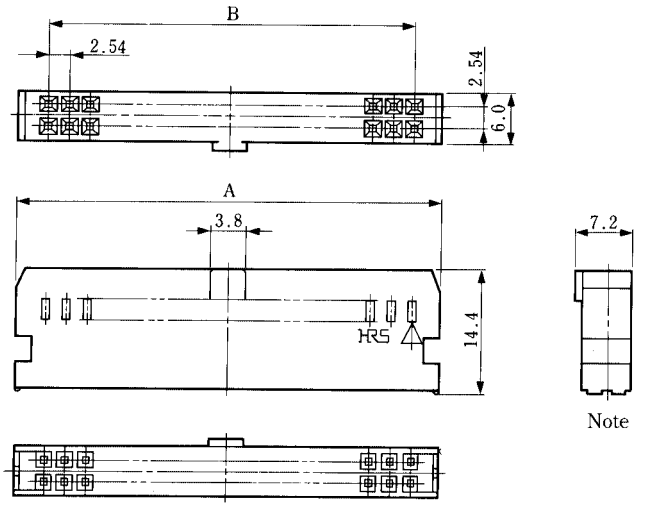

Unit : mm

Part No.	HRS No.	No. of Contacts	A	B	Polarizing Guide	RoHS
HIF3BA-10D-2.54C(63)	610-1041-0 63	10	17.25	10.16	One at center	YES
HIF3BA-14D-2.54C(63)	610-1051-3 63	14	22.35	15.24		
HIF3BA-16D-2.54C(63)	610-1042-2 63	16	24.8	17.78		
HIF3BA-20D-2.54C(63)	610-1043-5 63	20	29.95	22.86		
HIF3BA-26D-2.54C(63)	610-1044-8 63	26	37.55	30.48		
HIF3BA-30D-2.54C(63)	610-1045-0 63	30	42.63	35.56		
HIF3BA-34D-2.54C(63)	610-1046-3 63	34	47.75	40.64		
HIF3BA-40D-2.54C(63)	610-1047-6 63	40	55.35	48.26		
HIF3BA-50D-2.54C(63)	610-1048-9 63	50	68.04	60.96	One right and left side, resp.	
HIF3BB-50D-2.54C(63)	610-1061-7 63				One at center	
HIF3BA-60D-2.54C(63)	610-1049-1 63	60	80.77	73.66	One right and left side, resp.	
HIF3BB-60D-2.54C(63)	610-1062-0 63				One at center	
HIF3BA-64D-2.54C(63)	610-1064-5 63	64	85.85	78.74	One right and left side, resp.	
HIF3BB-64D-2.54C(63)	610-1063-2 63				One at center	

Note : Some variations may differ from those in above figures.

Dec.1.2023 Copyright 2023 HIROSE ELECTRIC CO., LTD. All Rights Reserved.

■Cover Case for Crimping socket



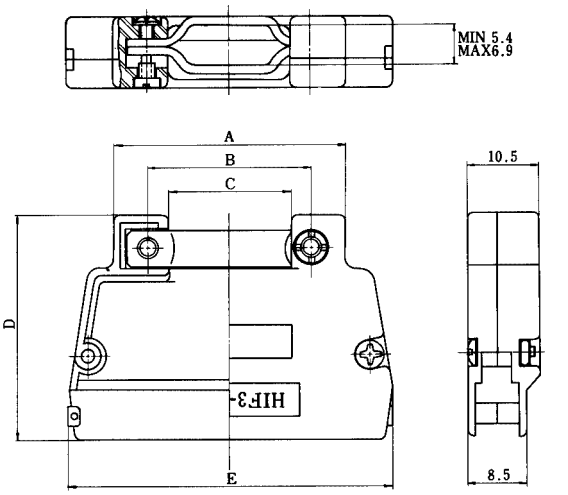

Unit : mm

Part No.	HRS No.	No. of Contacts	A	B	C	D	E	RoHS
HIF3-20CV(72)	562-0201-0 72	20	24.5	18.0	12.0	30.5	29.95	YES
HIF3-26CV(72)	562-0202-2 72	26	30.2	20.0	14.0	32.0	37.55	
HIF3-30CV(72)	562-0203-5 72	30	32.2	22.0	16.0	33.0	42.63	
HIF3-34CV(72)	562-0204-8 72	34	34.2	24.0	18.0	33.5	47.75	
HIF3-40CV(72)	562-0205-0 72	40	36.2	26.0	20.0	35.5	55.35	
HIF3-50CV(72)	562-0206-3 72	50	39.2	29.0	23.0	38.0	68.04	
HIF3-60CV(72)	562-0207-6 72	60	42.2	32.0	26.0	40.5	80.77	

Note 1 : The type F lock pin header cannot be used for a mating member.
Note 2 : Note that the product cannot be used with AWG #20.
Applicable jacket diameters are as described below.

20 contacts : 1.7mm diameter MAX
26 to 40 contacts : 1.6mm diameter MAX
50 to 60 contacts : 1.4mm diameter MAX

Dec.1.2023 Copyright 2023 HIROSE ELECTRIC CO., LTD. All Rights Reserved.

◆Contact (Crimping Contact for Socket)

●Loose Piece Contact

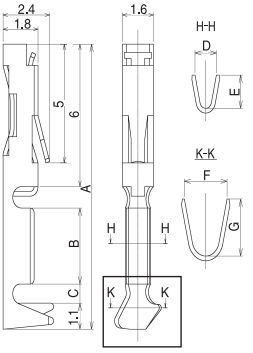

✻Termination of crimp terminals requires a special tool.
✻Please contact a Hirose representative if using non-applicable wires.

Unit : mm

Part No.	HRS No.	A	B	C	D	E	F	G	Remarks
HIF3-2022SC	562-0492-4	11.5	2.5	1	1.6	1.5	2.2	2.4	Fully Gold Plated
HIF3-2226SC	562-0079-8	12	3.2	0.8	1.1	1.4			
HIF3-2226SCA	562-0244-2								Partially Gold Plated
HIF3-2428SC	562-0124-0				1	1.2	2	2.25	Fully Gold Plated
HIF3-2428SCA	562-0246-8								Partially Gold Plated

Unit : mm

Part No.	Manual Crimping Tool	HRS No.	Applicable Wire				RoHS
			STYLE No	AWG	Wire Configuration	Jacket Diameter	
HIF3-2022SC	HIF3-TA2022HC	550-0124-0	UL1007 Stranded Wire	20	21 pieces / 0.18	ϕ1.8	○
				22	17 pieces / 0.16	ϕ1.6	
HIF3-2226SC HIF3-2226SCA	HIF3-T2226HC	550-0063-8	UL1007 Stranded Wire	22	17 pieces / 0.16	ϕ1.6	
				24	11 pieces / 0.16	ϕ1.5	
				26	7 pieces / 0.16	ϕ1.3	
HIF3-2428SC HIF3-2428SCA	HIF3-TA2428HC	550-0100-2	UL1007 Stranded Wire	24	11 pieces / 0.16	ϕ1.5	
				26	7 pieces / 0.16	ϕ1.3	
				28	7 pieces / 0.127	ϕ1.2	

Note 1 : Perform crimping operation based on the handling manual. Contact a Hirose Representative for the manual crimping tool handing manual.
Note 2 : Issues with non-Hirose specified tools are outside the scope of warranty.
Note 3 : The applicable contacts and wires are limited to those listed in the table.
Note 4 : Only HIF3-2022SC has a different frame shape.

●Reel Contact

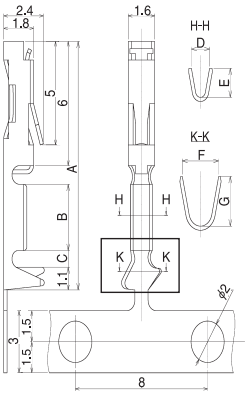

Unit : mm

Part No.	HRS No.	A	B	C	D	E	F	G	Remarks
HIF3-2022SCF	562-0493-7	11.5	2.5	1	1.6	1.5	2.2	2.4	Fully Gold Plated
HIF3-2226SCF	562-0080-7	12	3.2	0.8	1.1	1.4			
HIF3-2226SCFA	562-0245-5								Partially Gold Plated
HIF3-2428SCF	562-0125-3				1	1.2	2	2.25	Fully Gold Plated
HIF3-2428SCFA	562-0247-0								Partially Gold Plated

Unit : mm

Part No.	Applicator	HRS No.	Applicable Wire				RoHS
			STYLE No	AWG	Wire Configuration	Jacket Diameter	
HIF3-2022SCF	AP105-HIF3-2022S	901-4027-9	UL1007 Stranded Wire	20	26 pieces / 0.16	ϕ1.85	○
				22	17 pieces / 0.16	ϕ1.65	
HIF3-2226SCF HIF3-2428SCF	AP105-HIF3-22-28SCF	901-4031-6	UL1007 Stranded Wire	22	17 pieces / 0.16	ϕ1.65	
				24	11 pieces / 0.16	ϕ1.5	
				26	7 pieces / 0.16	ϕ1.3	
				28	7 pieces / 0.127	ϕ1.2	
HIF3-2226SCFA HIF3-2428SCFA	AP105-HIF3-22-28SCFA	901-4030-3	UL1007 Stranded Wire	22	17 pieces / 0.16	ϕ1.65	
				24	11 pieces / 0.16	ϕ1.5	
				26	7 pieces / 0.16	ϕ1.3	
				28	7 pieces / 0.127	ϕ1.2	

Note 1 : Use "CM-105C" as semi-automatic crimping machine.
Note 2 : Perform crimping in accordance with the "Crimping Quality Standards" and "Crimping Conditions Table". For the handling manuals on semi-automatic crimping machines or applicators contact a Hirose representative.
Note 3 : Issues with non-Hirose specified tools are outside the scope of warranty.
Note 4 : The applicable contacts and wires are limited to those listed in the table. Contact a Hirose representative regarding wires not listed in the table.
Note 5 : Only HIF3-2022SC has a different frame shape.
Note 6 : By adding or replacing a part of AP105-HIF3-22-28SCF and AP105-HIF3-22-28SCF, one-sided carriers (SCF) and double-sided carriers can be supported. (Requires part replacement.)

●VA Type Loose Piece Contact

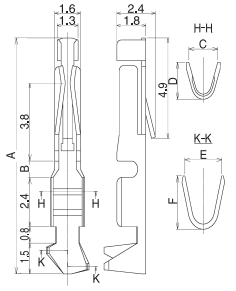

Unit : mm

Part No.	HRS No.	A	B	C	D	E	F	Remarks
HIF3-2226SCC	613-0004-7	11.5	0.8	1.8	1.8	2.3	2.6	Partiall Gold Plated
HIF3-2630SCC	613-0003-4			1.4	1.35	2	2.1	

Unit : mm

Part No.	Manual Crimping Tool	HRS No.	Applicable Wire				RoHS
			STYLE No	AWG	Wire Configuration	Jacket Diameter	
HIF3-2226SCC	HIF3-TB2226HC	550-0154-1	UL1007 Stranded Wire	22	17 pieces / 0.16	ϕ1.6	○
				24	11 pieces / 0.16	ϕ1.5	
				26	7 pieces / 0.16	ϕ1.3	
HIF3-2630SCC	HIF3-TB2630HC	550-0155-4	UL1007 Stranded Wire	26	7 pieces / 0.16	ϕ1.3	
				28	7 pieces / 0.127	ϕ1.2	
				30	7 pieces / 0.1	ϕ1.1	

Note 1 : Perform crimping operation based on the handling manual. Contact a Hirose Representative for the manual crimping tool handing manual.
Note 2 : Issues with non-Hirose specified tools are outside the scope of warranty.
Note 3 : The applicable contacts and wires are limited to those listed in the table.

●VA Type Reel Contact

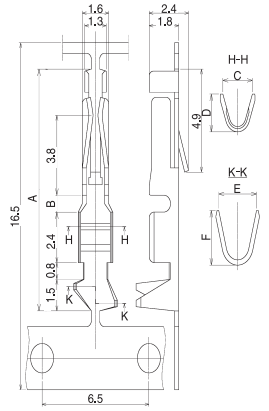

Unit : mm

Part No.	HRS No.	A	B	C	D	E	F	Remarks
HIF3-2226SCFC	613-0002-1	11.5	0.8	1.8	1.8	2.3	2.6	Partially Gold Plated
HIF3-2630SCFC	613-0001-9	11.5	0.8	1.4	1.35	2	2.1	Partially Gold Plated
HIF3A-3236SCFC	613-0005-0	12.4	1.7	1.1	1.1	1.4	1.5	Partially Gold Plated

Unit : mm

Part No.	Applicator	HRS No.	Applicable Wire				RoHS
			STYLE No	AWG	Wire Configuration	Jacket Diameter	
HIF3-2226SCFC	AP105-HIF3-2226SCFC	901-4005-6	UL1007 Stranded Wire	22	17 pieces / 0.16	ϕ1.65	○
				24	11 pieces / 0.16	ϕ1.5	
				26	7 pieces / 0.16	ϕ1.3	
			UL1061 Stranded Wire	26	7 pieces / 0.16	ϕ0.98	
			UL1571 Stranded Wire	26	7 pieces / 0.16	ϕ0.98	
HIF3-2630SCFC	AP105-HIF3-2630SCFC	901-4006-9	UL1007 Stranded Wire	26	7 pieces / 0.16	ϕ1.3	
				28	7 pieces / 0.127	ϕ1.2	
				30	7 pieces / 0.1	ϕ1.15	
HIF3A-3236SCFC	AP105-HIF3-3236SCFC	901-4007-1	———	32	7 pieces / 0.08	———	
				36	10 pieces / 0.04	———	

Note 1 : Use "CM-105C" as semi-automatic crimping machine.
Note 2 : Perform crimping in accordance with the "Crimping Quality Standards" and "Crimping Conditions Table". For the handling manuals on semi-automatic crimping machines or applicators contact a Hirose representative.
Note 3 : Issues with non-Hirose specified tools are outside the scope of warranty.
Note 4 : The applicable contacts and wires are limited to those listed in the table. Contact a Hirose representative regarding wires not listed in the table.

Dec.1.2023 Copyright 2023 HIROSE ELECTRIC CO., LTD. All Rights Reserved.

◆Tools

●Crimping Tool

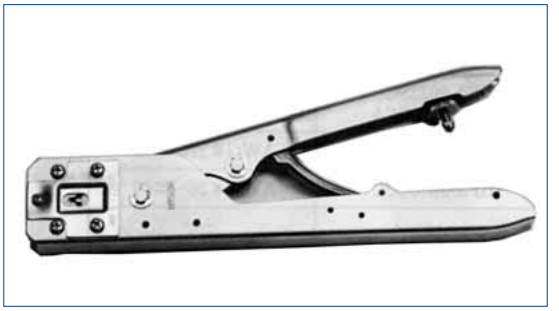

Manual Crimping Tool HIF3-T2226HC

Part No.	HRS No.
HIF3-T2226HC	550-0063-8

●Automatic Crimping Tool (Type : CM-105C)



Part No.	HRS No.
CM-105C	901-0001-0

●Contact Extraction Tools

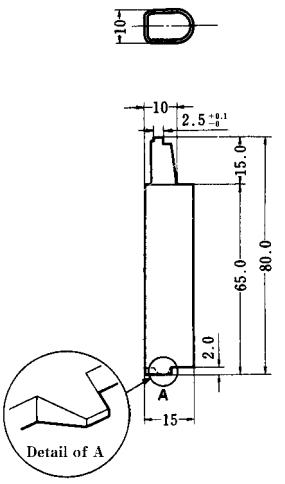

Part No.	HRS No.
HIF1-PO	550-0049-7

How to use the extraction tool

(1) How to extract contacts

As shown in Figure 1, where the extraction tool is inserted in the lance fixed slot on the insulated case, slightly pull the cable, and the contact can be removed.

(2) How to adjust the lance (raise)

In order to re-insert the contact removed from the insulated case, raise the contact lance area using the tool A, and re-insert the contact, as shown in Figure 2.

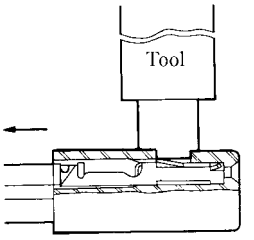

Figure 1

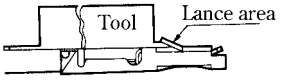

Figure 2

Dec.1.2023 Copyright 2023 HIROSE ELECTRIC CO., LTD. All Rights Reserved.

◆Socket Side (Crimping) Assembling Procedures

(1) As shown in Figure 1, peel the applicable cable (AWG#20 to #26) jacket, and connect it using crimping jig HIF3-TA2022HC, HIF3-TA2226HC, or HIF3-TA2426HC. In this case, insert the cable so as to hit the contact cable stripper position as shown Figure 2.

(2) After connection as shown Figure 2, check the contact direction, and insert the contact as shown Figures 3 and 4. Slightly pull the cable, and check whether the contact lance position is firmly fixed to the insulation case, as shown in the area (A).

Note1 : For handling procedures for special crimping tools, refer to the "Handling Instruction Manual".

Note2 : Wire strip length : Refer to crimp condition sheet.

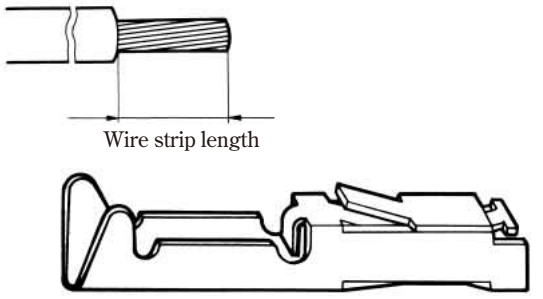

Figure 1

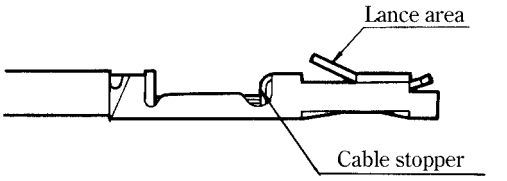

Figure 2

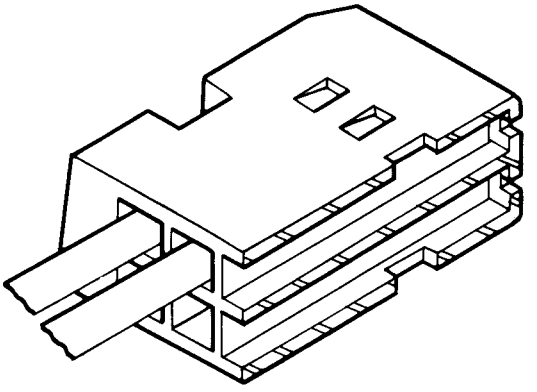

Figure 3

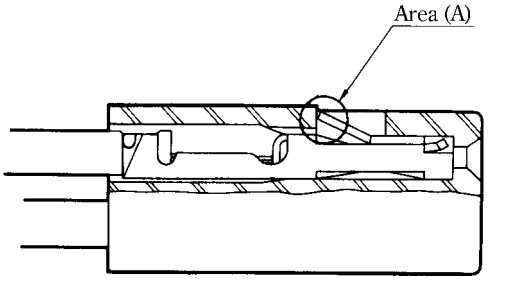

Figure 4

Dec.1.2023 Copyright 2023 HIROSE ELECTRIC CO., LTD. All Rights Reserved.