CUDEVICES

SERIES: DS04-254 | **DESCRIPTION:** DIP SWITCH

FEATURES

- 2.54 mm pitch
- 1~12 pole options
- long or short pin option
- raised or flat actuator option
- through hole

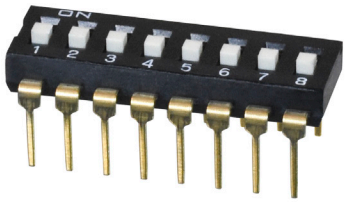

RoHS

SPECIFICATIONS

parameter	conditions/description	min	typ	max	units
rated voltage (per pole)	switching non-switching			24 50	Vdc Vdc
rated current (per pole)	switching non-switching			25 100	mA mA
withstanding voltage	for 1 minute		500		Vac
contact resistance	initial after life test			50 100	mΩ mΩ
insulation resistance	at 500 Vdc	100			MΩ
operating force				1000	g
switch travel				0.9	mm
operating temperature		-40		85	°C
storage temperature		-40		85	°C
life		2000			cycles
flammability rating	UL94V-0				
RoHS	yes				

SOLDERABILITY

parameter	conditions/description	min	typ	max	units
hand soldering[1]	for maximum 3 seconds	315	320	325	°C
wave soldering[1]	for maximum 5 seconds	240	250	260	°C

Notes: 1. Keep in "off" position during soldering.

PART NUMBER KEY

DS04 - 254- X X - XX BK

- Base Number
- Actuator: 1 = Raised, 2 = Flat
- Pin Length: S = Short, L = Long
- No. of Poles: 01, 02, 03, 04, 05, 06, 07, 08, 10, 12

MECHANICAL DRAWING

units: mm
tolerance:
0.5<X≤3.0: ±0.15 mm
3.0<X≤6.0: ±0.20 mm
6.0<X≤30.0: ±0.25 mm
30.0<X≤120.0: ±0.30 mm
120.0<X≤400.0: ±0.50 mm
X>400.0: ±0.80 mm
unless otherwise noted

ITEM	DESCRIPTION	MATERIAL	PLATING/COLOR
1	housing	PBT (UL94V-0)	black
2	actuator	PBT (UL94V-0)	white
3	contact	copper alloy	gold
4	pins 1,2	copper alloy	gold
5	base	PBT (UL94V-0)	black

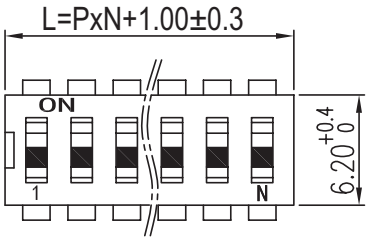

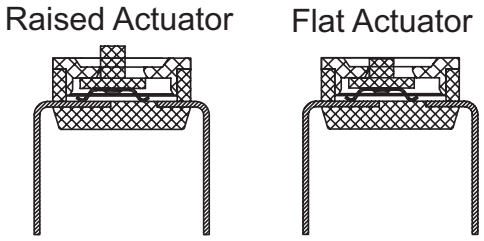

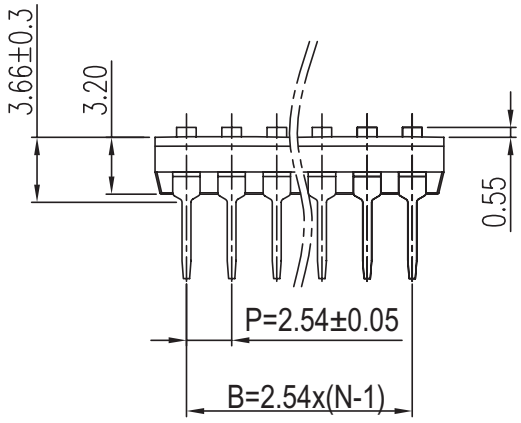

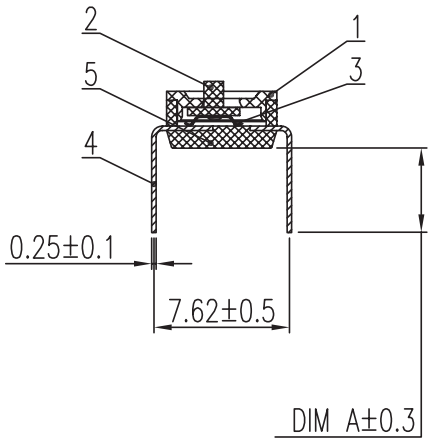

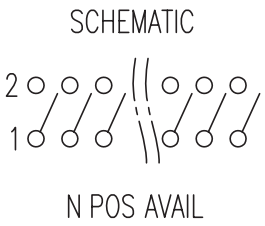

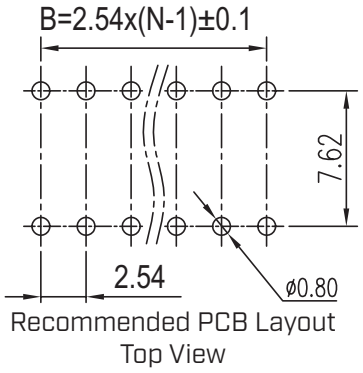

PIN LENGTH, A (mm)	
Short Pin	Long Pin
3.50	4.74

This series is constructed of single piece modules where L is the total length, P is the pitch, and N is the number of poles.										
N	01	02	03	04	05	06	07	08	10	12
L	3.54	6.08	8.62	11.16	13.70	16.24	18.78	21.32	26.40	31.48
B	--	2.54	5.08	7.62	10.16	12.70	15.24	17.78	22.86	27.94

REVISION HISTORY

rev.	description	date
1.0	initial release	11/22/2019
1.01	logo, datasheet style update	08/05/2022

The revision history provided is for informational purposes only and is believed to be accurate.

CUI Devices offers a one (1) year limited warranty. Complete warranty information is listed on our website.

CUI Devices reserves the right to make changes to the product at any time without notice. Information provided by CUI Devices is believed to be accurate and reliable. However, no responsibility is assumed by CUI Devices for its use, nor for any infringements of patents or other rights of third parties which may result from its use.

CUI Devices products are not authorized or warranted for use as critical components in equipment that requires an extremely high level of reliability. A critical component is any component of a life support device or system whose failure to perform can be reasonably expected to cause the failure of the life support device or system, or to affect its safety or effectiveness.

cuidevices.com