Accurate Kinetic Energy
No.11-3 Jianguo Rd., T.E.P.Z. 42760 Taiwan, ROC

All dimensions are millimeters.

CAD:	TCR	
Review:	EG	
Appr:	JL	
Page:	1/4	Date: January 03,2022

Specification Title:

HCMOS Temperature Compensated Crystal Oscillator

HCMOS TCXO - Ceramic Package

2.5 x 2.0 millimeter Surface Mount

Part Number:	**TXH22 Series**

Electrical Specifications:

Frequency Range		8.000 to 52.000			MHz
Frequency Tolerance		±2.0			ppm Max.
Frequency Stability vs. Operating Temperature		±2.5 ~ ±5.0			
Frequency Stability vs. Supply Voltage Change		±0.2			
Frequency Stability vs. 10% Load Change		±0.2			
Aging per Year		±1.0			
Operating Temperature Range	Standard	-30 to +85			°C
	Extended	-40 to +85			
		-40 to +105			
Storage Temperature Range		-55 to +125			
Supply Voltage		1.8 ± 5%	2.5 ± 5%	3.3 ± 5%	VDD
Input Current	8.000 to 20.000MHz	2.8	3.7	4.8	mA Max.
	20.001 to 30.000MHz	3.2	4.2	5.5	
	30.001 to 40.000MHz	3.6	4.6	6.0	
	40.001 to 52.000MHz	4.5	5.5	7.0	
Output Voltage	Logic High (Voh)	90%			VDD Min.
	Logic Low (Vol)	10%			VDD Max.
Output Symmetry (Duty Cycle)	Standard	45 ~ 55 (at 50% VDD)			%
Output Level		CMOS			
Output Load		15			pF Max.
Rise and Fall Time		7	6	5	ns Max.
Phase Jitter (12 KHz to 20 MHz)		1			ps Max. RMS
Enable-Disable Function		Tri-State			
Start Up Time		10			ms Max.

RoHS Compliant

Pb - Lead Free

Ltr	Revisions	Date	Appr

Mechanical Outline and Solder Pad Layout:

<TOP>

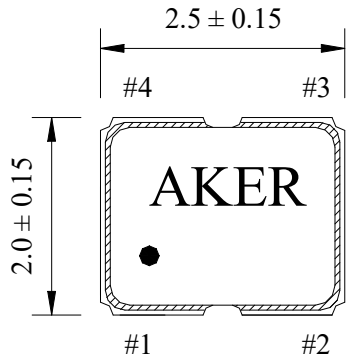

<SIDE>

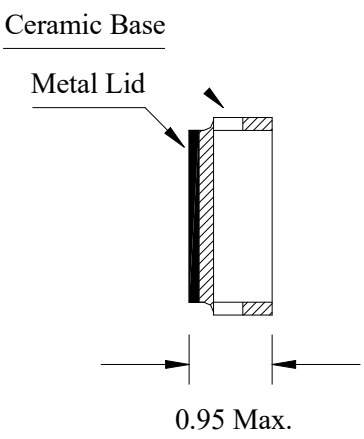

<BOTTOM>

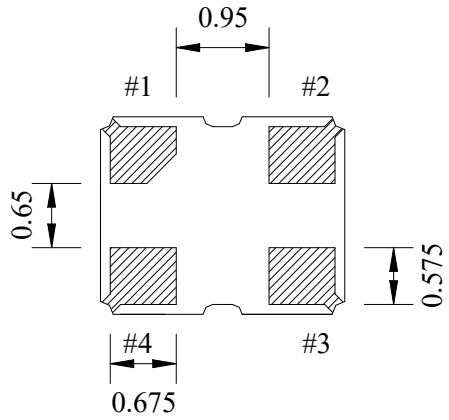

<SUGGESTED LAYOUT>

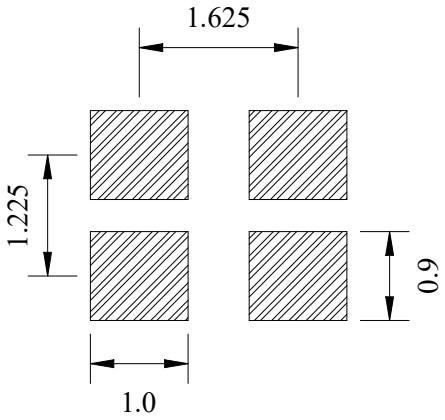

PIN No.	Connection
#1	Enable/Disable
#2	GND
#3	Output
#4	VDD

Enable/Disable Function	
PIN #1	PIN #3
HIGH or OPEN	Operating
LOW	High Impedance

Package is Seam Sealed Ceramic-Metal.
Dimensions are millimeters.

Carrier Tape Dimensions:

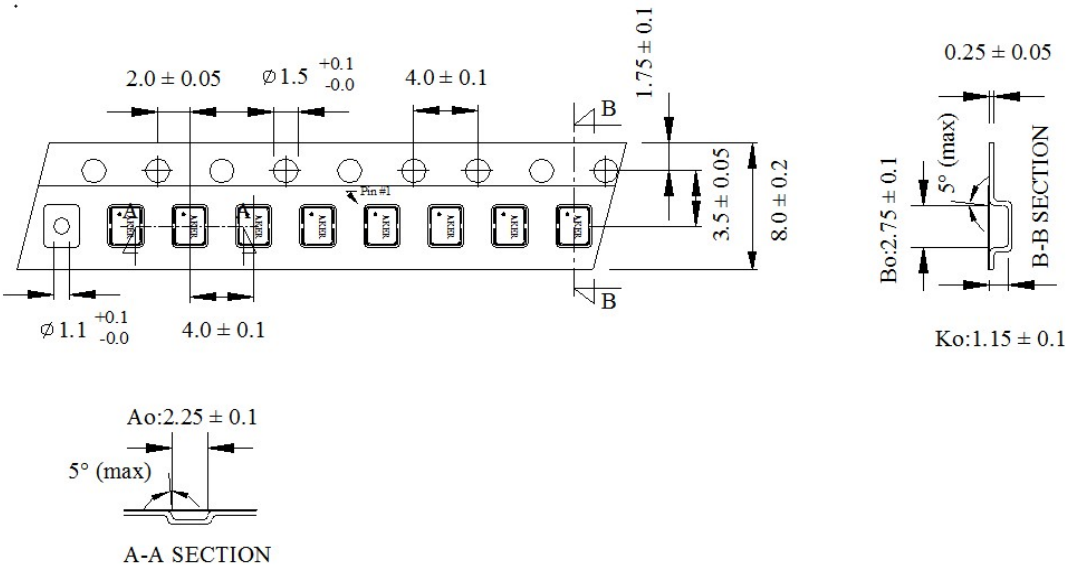

Dimensions are millimeters.

Solder Reflow Characteristics:

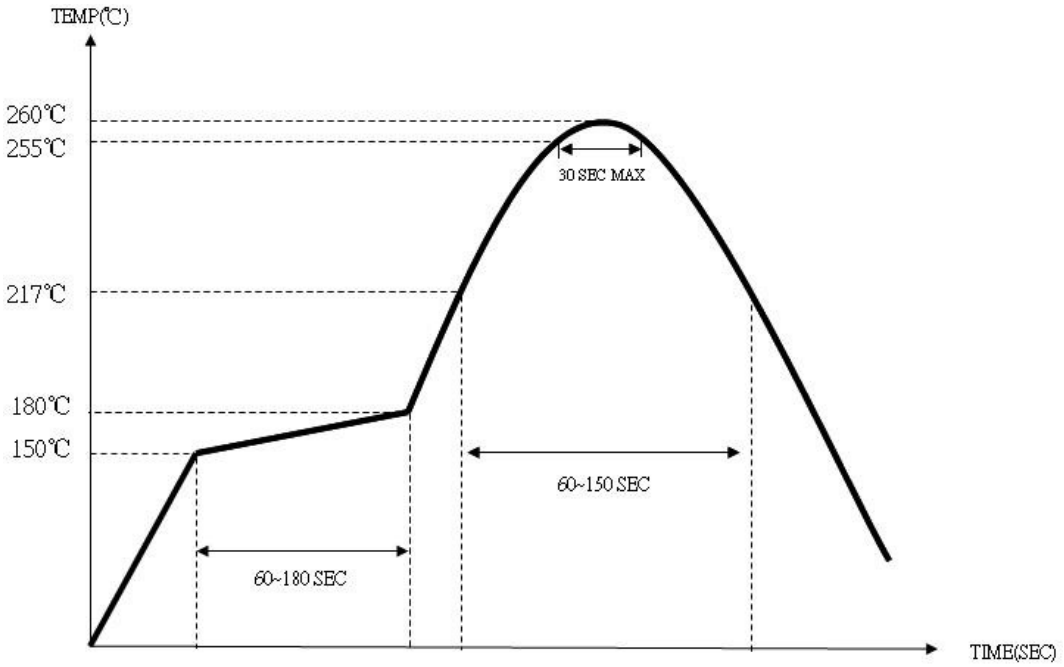

How to build a Part Number:

Series	TXH	Parameter
Package	22	2.5 x 2.0 mm
	-	
Supply Voltage	18	1.8 VDD ± 5%
	25	2.5 VDD ± 5%
	33	3.3 VDD ± 5%
Temperature Stability	025	±2.5 ppm
	030	±3.0 ppm
	050	±5.0 ppm
	-	
Frequency	8.000~52.000	MHz
	-	
Temperature Range	See Notes	-30 to +85 °C
	X	-40 to +85 °C
	X2	-40 to +105 °C
	-	
Packaging	R	1000pcs Reel
	R3	3000pcs Reel

Part Number Example:

TXH22-33050-26.000-X-R

TXH22: 2.5 x 2.0 mm SMD Package

33: +3.3 VDD Supply Voltage

050: ±5.0 ppm Temperature Stability

26.000 MHz Nominal Frequency

X: -40 to + 85°C Temperature Range

R: Tape and Reel Packaging

Notes:

1- Standard Temperature Range do not need to be included in Part Number description.

2- Product is shipped in Tape and Reel configuration.

3- Quantities less than 1000 pieces are shipped bulk in ESD pouches.

4- Specification subject to change without notice.