Confidential

APPROVAL SHEET

Customer Name	:	
Customer P/N	:	
Frequency	: 24.000000	MHz
Aker Approved P/N	: C5S-24.000-18-20100-A-X1-R	
Aker MPN	:	
Rev.	: 1	
ISSUE DATE	: Jun.15.2023	

APPROVED	CHECKED	PREPARED
Tin		Kiku
APPROVED BY CUSTOMER		

AKER TECHNOLOGY CO., LTD.

ADDRESS : NO 11-3, Jianguo Rd., Tanzi Dist., Taichung City 427, Taiwan.

TEL：886-4-25335978 FAX ： 886-4-25336011

Web: www.aker.com.tw

MSL:Level 1

RoHS compliant

IATF 16949 Certified

AEC-Q200 Qualified

Rev.	Date	Reviser	Revise contents
1	2023/6/15	Kiku	Initial Released

SMD CRYSTAL SPECIFICATION

1 . ELECTRICAL CHARACTERISTICS

■ Standard atmospheric conditions

Unless otherwise specified , the standard range of atmospheric conditions for making measurement and tests are as follow :

Ambient temperature : 25±5℃

Relative humidity : 40%~70%

If there is any doubt about the results , measurement shall be made within the following limits :

Ambient temperature : 25±3℃

Relative humidity : 40%~70%

- AKER Model : CXAF-531
- Oscillation Mode : Fundamental
- Cutting Mode : AT CUT
- Measurement Equipment : 250B(Measured FL)
- Insulation Resistance : More than 500M ohms at DC 100V

Parameters	Symbol	Electrical Spec				Notes
		Min.	Typ.	Max.	Units.	
Nominal Frequency	FL		24.000000		MHz	
Frequency Tolerance			±20		ppm	at 25℃ ± 3℃
Frequency Stability			±100		ppm	Operating Temp (Refer 25℃)
Load Capacitance	CL		18		pF	
Aging			±3		ppm	First Year at 25℃
Operating Temperature		-40	~	125	℃	
Storage Temperature Range		-55	~	150	℃	
Drive Level	DL			100	uW	
Equivalent Series Resistance	ESR			40	Ω	@Series
Shunt Capacitance	C0			7	pF	

Please kindly be noted that AKER DO NOT guarantee parts quality which involves human security application.

2 . MARKING :

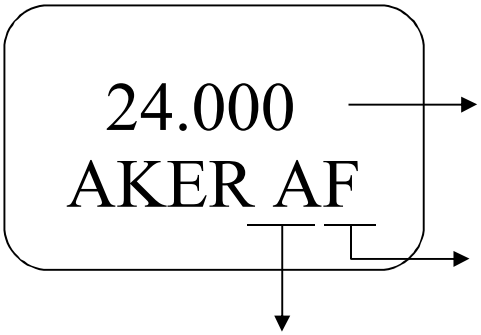

Date Code Guide

Year / Month	2021 2025 (4N+1)	2022 2026 (4N+2)	2023 2027 (4N+3)	2024 2028 (4N+0)
JAN	a	n	A	N
FEB	b	p	B	P
Mar	c	q	C	Q
Apr	d	r	D	R
May	e	s	E	S
Jun	f	t	F	T
Jul	g	u	G	U
Aug	h	v	H	V
Sep	j	w	J	W
Oct	k	x	K	X
Nov	l	y	L	Y
Dec	m	z	M	Z

A cycle every four years

3 . DIMENSION : (Unit : mm)

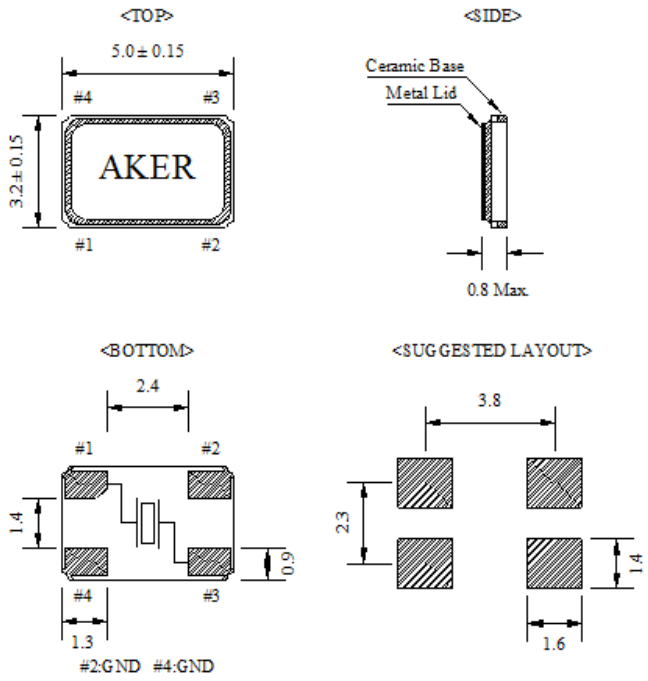

4 . STRUCTURE ILLUSTRATION

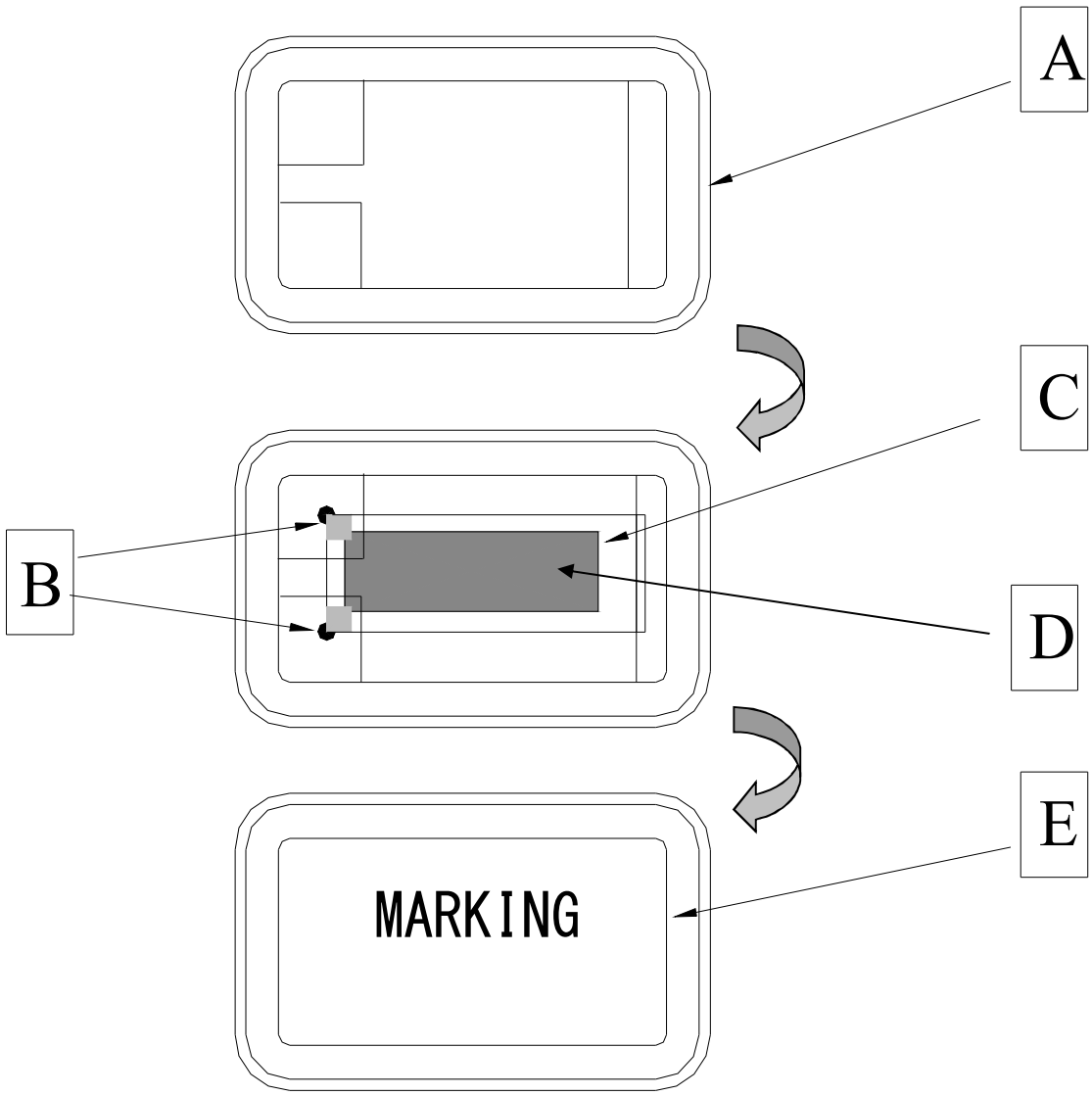

COMPONENTS		MATERIALS	COMPONENTS		MATERIALS
A	Base (Package)	Ceramic(Al_2O_3)+Kovar(Fe/Co/Ni)	D	Electrode	Cr / Ag
B	Conductive adhesive	Ag / Silicon resin	E	Lid	Fe/Co/Ni
C	Crystal blank	SiO_2			

5 . PACKING :

TAPE SPECIFICATION (Unit : mm)

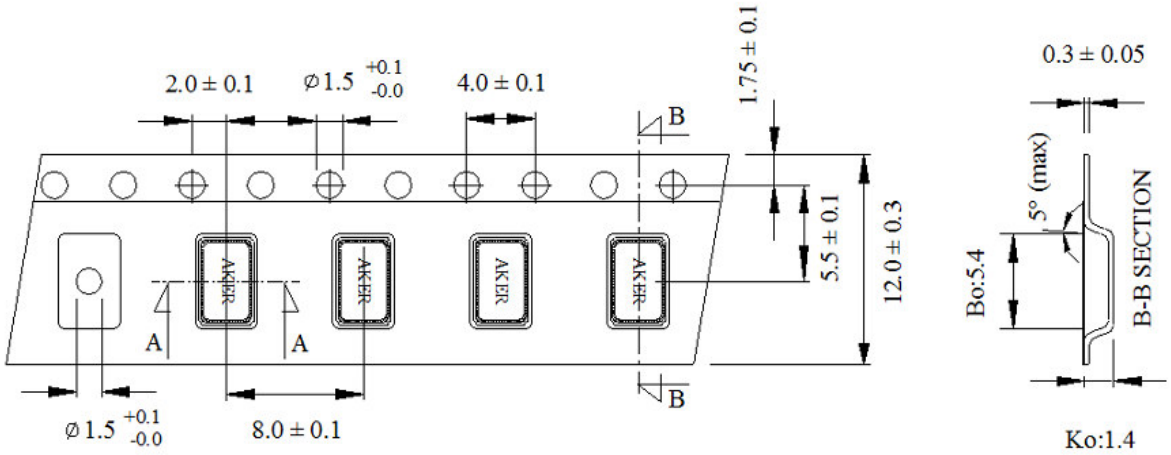

OUTLINE DIMENSION (Unit : mm)

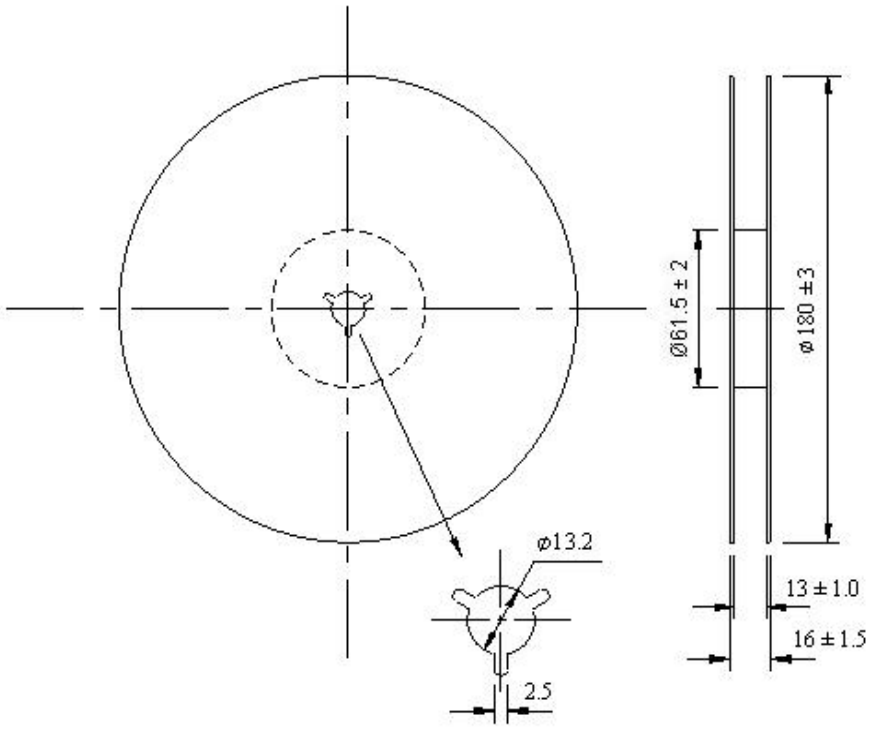

6. COVER TAPE ADHESION STRENGTH :

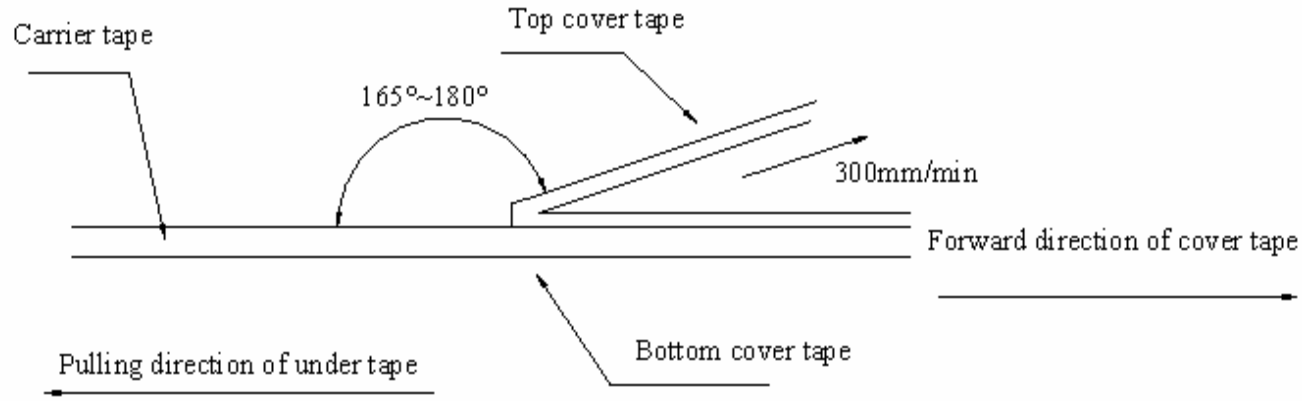

*** In the case, the cover tape is pulled off under the above conditions, the cover tape adhesion strength should be 10.2g~71.4g Plastic tape: 10.2g~71.4g

(Cover tape adhesion strength)

7 . SOLDERING REFLOW PROFILE

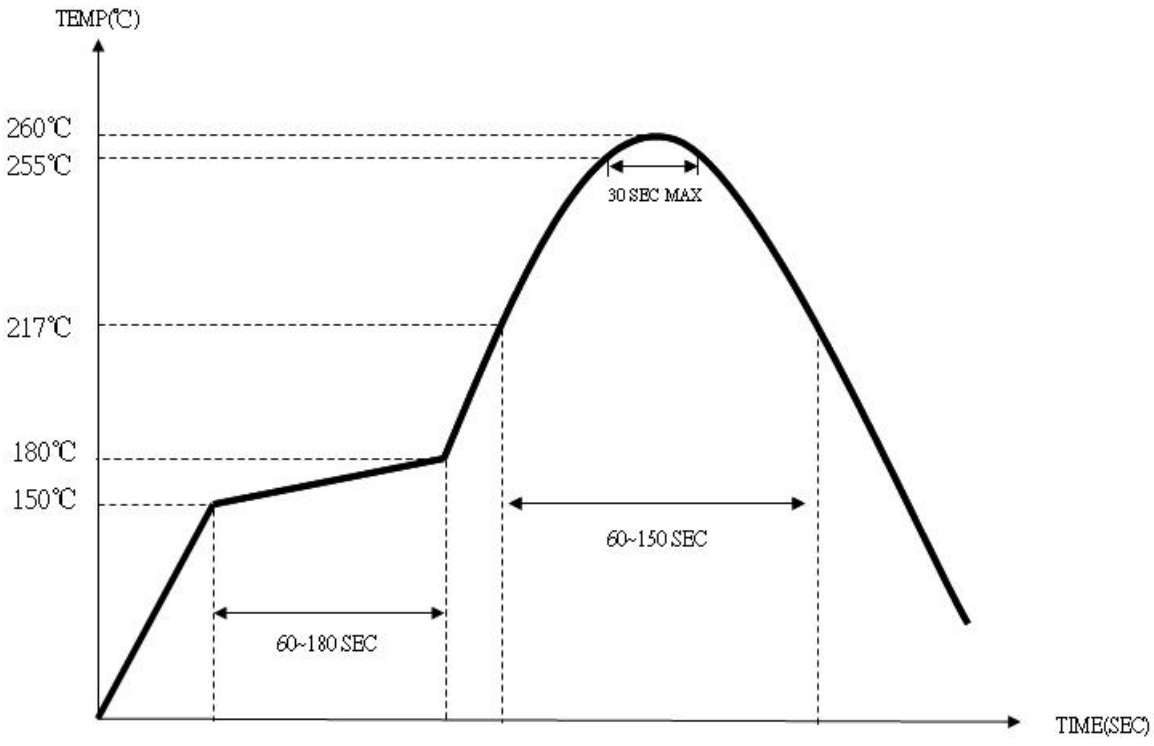

8. PACKING :

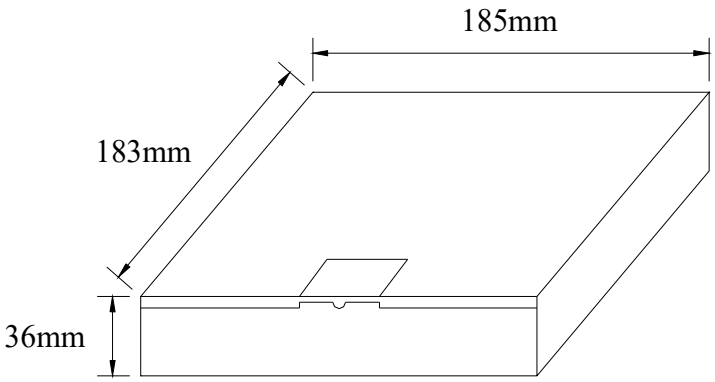

BOX = 1000 PCS / REEL

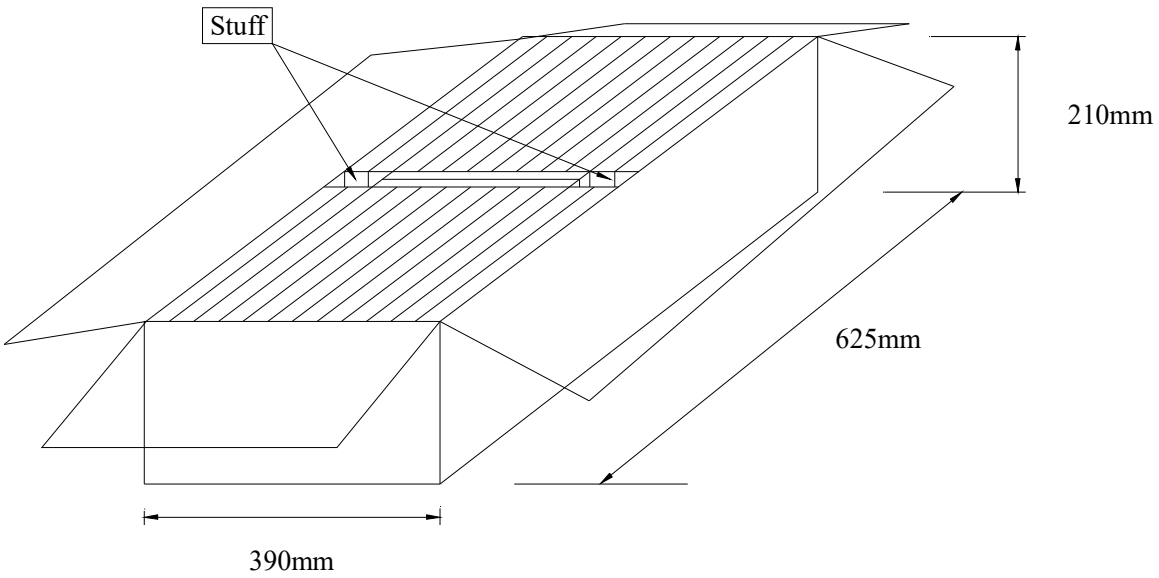

SMD product packs 32 BOX = The outside box packs (1000 PCS * 32 BOX = 32000 PCS)(MAX)

9 . MECHANICAL PERFORMANCE

TEST ITEMS	TEST METHODS AND TEST CONDITION	PERFORMANCE
9.1 Temperature Cycling	-55±3℃/30min maximum~+125±3℃/30min maximum，1000cycles	To satisfy the electrical performance .
9.2 Operational Life	125℃±3°C，1000hrs±12hrs	
9.3 Biased Humidity	85°C±5°C&85%±5%R.H.，1000±12hrs	
9.4 Resistance To Soldering Heat Test	Reflow test 2 times.	
9.5 High Temperature Exposure	150℃±3°C，1000hrs±12hrs	
9.6 Vibration Test	Freq.range: 10~2000Hz，Peak to peak amplitude:1.52mm Peak acceleration:5G (49m/s2)，3 direction(X, Y,Z) ，20min 12cycles each of 3 orientations.	
9.7 Mechanical Shock	100G，6mS，3 times for each direction(X, Y, Z)，3 cycles	
9.8 Physical Dimension	Verify physical dimensions to the applicable device detail specification.	
9.9 Solderability	260℃，Coated > 95%	
9.10 Board Flex	PCB=100*40(mm)，Bending=2 mm (min)，Duration=60+5/-0 sec	
9.11 External Visual	Inspect device construction and marking.	
9.12 Terminal Strength	A force of 17.7N for 60 seconds.	