Confidential

APPROVAL SHEET

Customer Name	:	
Customer P/N	:	
Frequency	: 16.000000	MHz
Aker Approved P/N	: C1E-16.000-10-1520-X-R	
Aker MPN	:	
Rev.	: 1	
ISSUE DATE	: Jun.1.2023	

APPROVED	CHECKED	PREPARED
Lee		Kiku
APPROVED BY CUSTOMER		

AKER TECHNOLOGY CO., LTD.

ADDRESS : NO 11-3, Jianguo Rd., Tanzi Dist., Taichung City 427, Taiwan.

TEL：886-4-25335978 FAX ： 886-4-25336011

Web: www.aker.com.tw

MSL:Level 1

RoHS compliant

Rev.	Date	Reviser	Revise contents
1	2023/6/1	Kiku	Initial Released

SMD CRYSTAL SPECIFICATION

1 . ELECTRICAL CHARACTERISTICS

■ Standard atmospheric conditions

Unless otherwise specified , the standard range of atmospheric conditions for making measurement and tests are as follow :

Ambient temperature : 25±5℃

Relative humidity : 40%~70%

If there is any doubt about the results , measurement shall be made within the following limits :

Ambient temperature : 25±3℃

Relative humidity : 40%~70%

- AKER Model : C1E
- Oscillation Mode : Fundamental
- Cutting Mode : AT CUT
- Measurement Equipment : 250B(Measured FL)
- Insulation Resistance : More than 500M ohms at DC 100V

Parameters	Symbol	Electrical Spec				Notes
		Min.	Typ.	Max.	Units.	
Nominal Frequency	FL		16.000000		MHz	
Frequency Tolerance			±15		ppm	at 25℃ ± 3℃
Frequency Stability			±20		ppm	Operating Temp (Refer 25℃)
Load Capacitance	CL		10		pF	
Aging			±3		ppm	First Year at 25℃
Operating Temperature		-40	~	85	℃	
Storage Temperature Range		-55	~	125	℃	
Drive Level	DL			100	uW	
Equivalent Series Resistance	ESR			120	Ω	@Series
Shunt Capacitance	C0			3	pF	

Please kindly be noted that AKER DO NOT guarantee parts quality which involves human security application.

2 . MARKING :

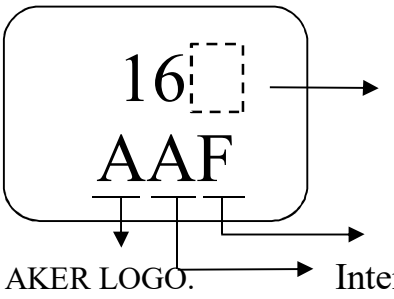

Date Code Table

Month / Year			1	2	3	4	5	6	7	8	9	10	11	12
2019	2023	(4N+3)	A	B	C	D	E	F	G	H	J	K	L	M
2020	2024	(4N+0)	N	P	Q	R	S	T	U	V	W	X	Y	Z
2021	2025	(4N+1)	a	b	c	d	e	f	g	h	j	k	l	m
2022	2026	(4N+2)	n	p	q	r	s	t	u	v	w	x	y	z

A cycle every four years

3 . DIMENSION : (Unit : mm)

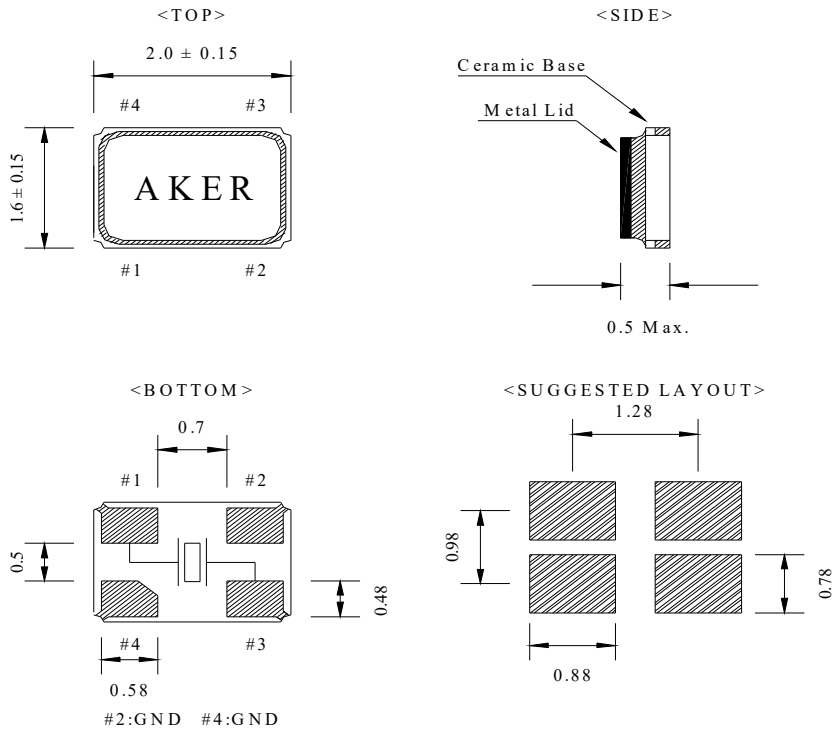

4 . STRUCTURE ILLUSTRATION

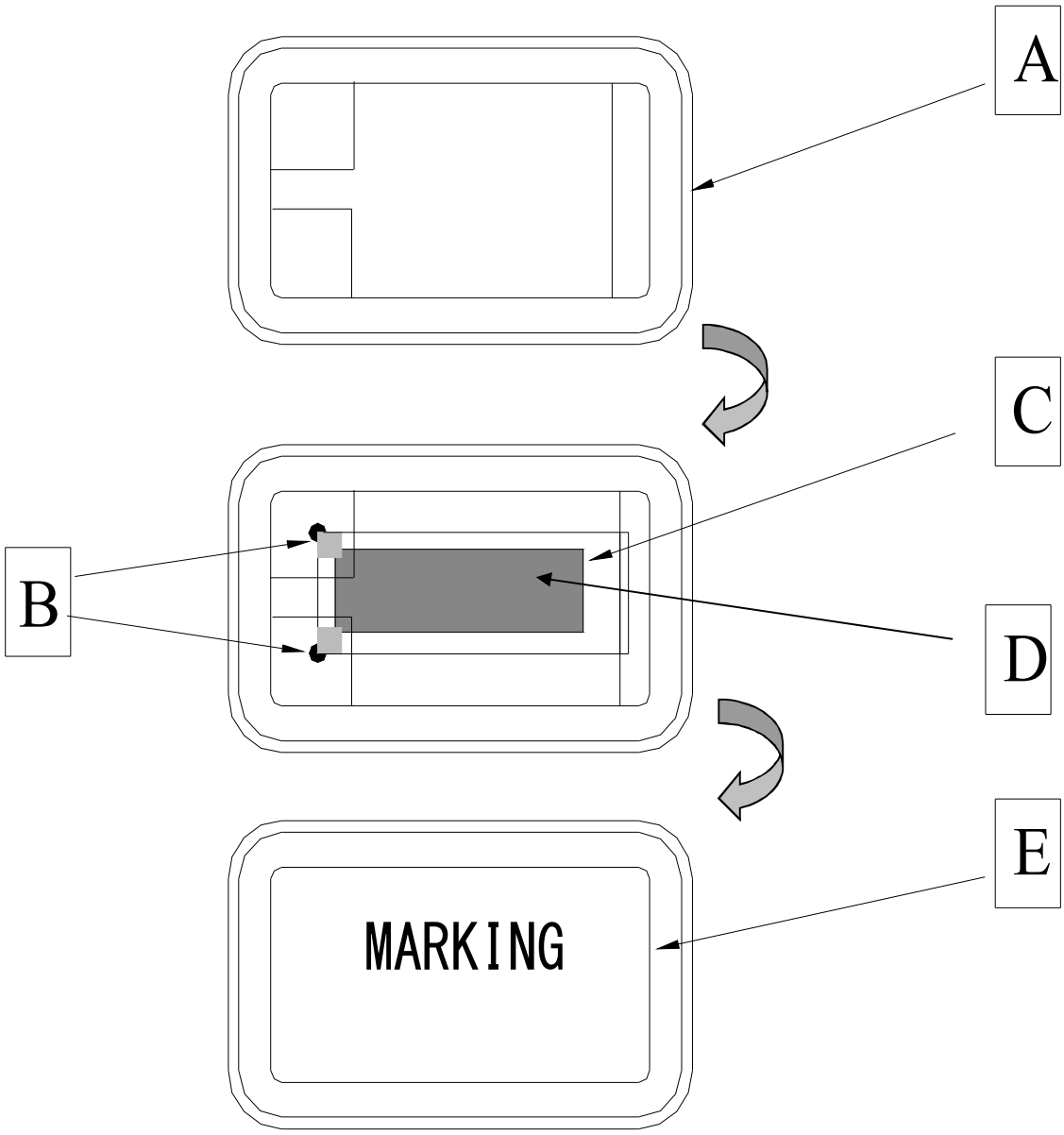

COMPONENTS		MATERIALS	COMPONENTS		MATERIALS
A	Base (Package)	Ceramic(Al_2O_3)+Kovar(Fe/Co/Ni)	D	Electrode	Cr / Ag
B	Conductive adhesive	Ag / Silicon resin	E	Lid	Fe/Co/Ni
C	Crystal blank	SiO_2			

5 . PACKING :

TAPE SPECIFICATION

(Unit : mm)

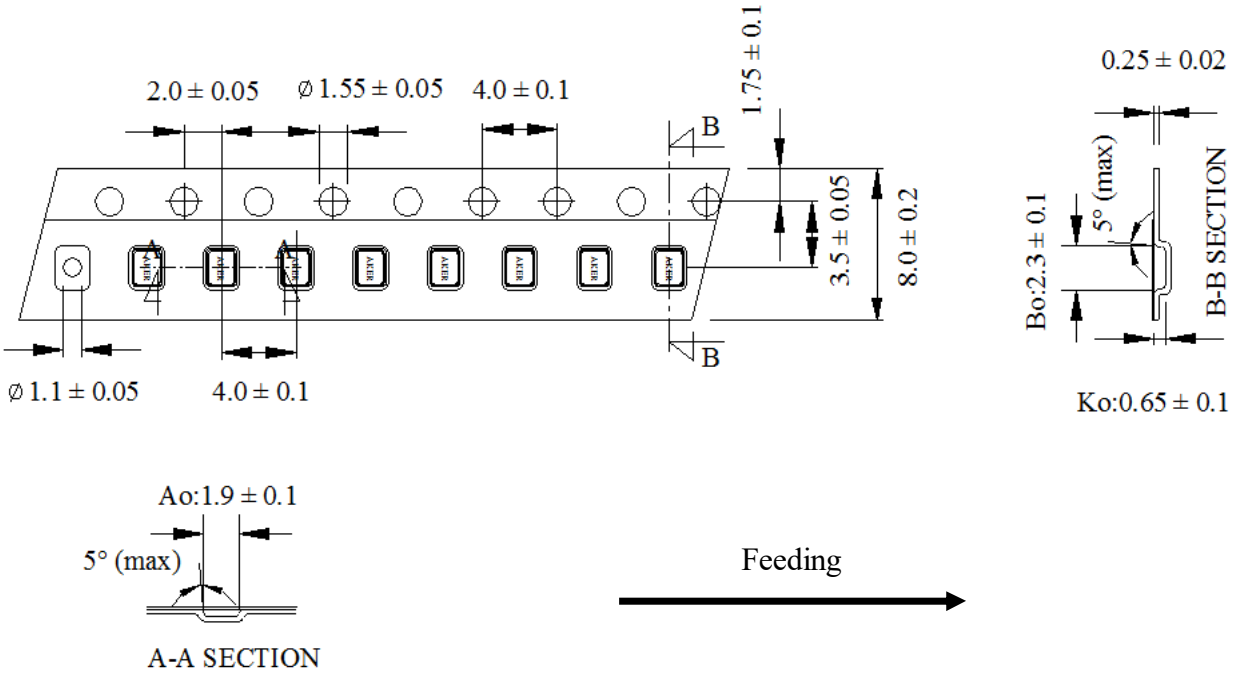

OUTLINE DIMENSION

(Unit : mm)

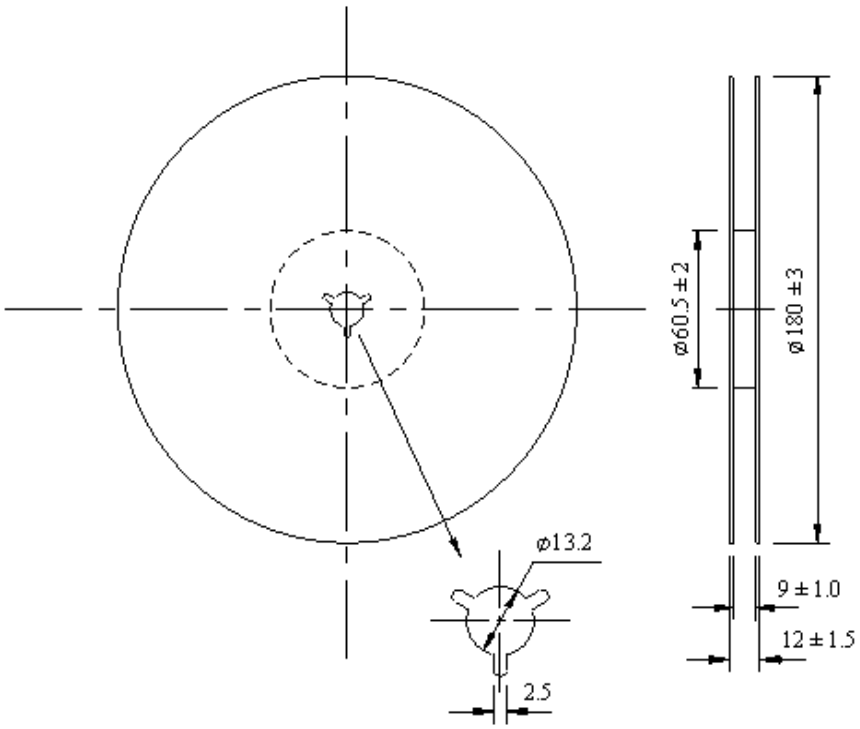

6. COVER TAPE ADHESION STRENGTH：

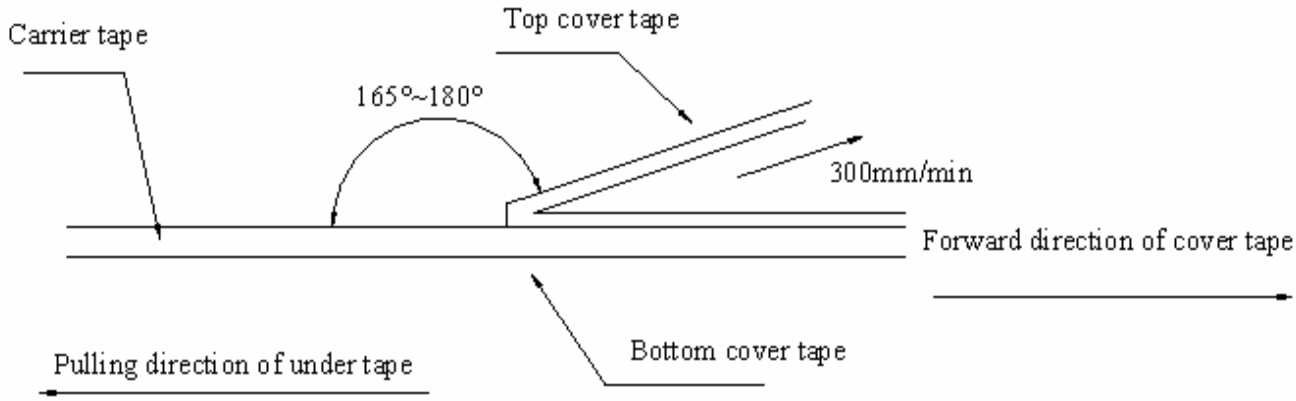

*** In the case, the cover tape is pulled off under the above conditions, the cover tape adhesion strength should be 10.2g~71.4g Plastic tape: 10.2g~71.4g

(Cover tape adhesion strength)

7 . SOLDERING REFLOW PROFILE

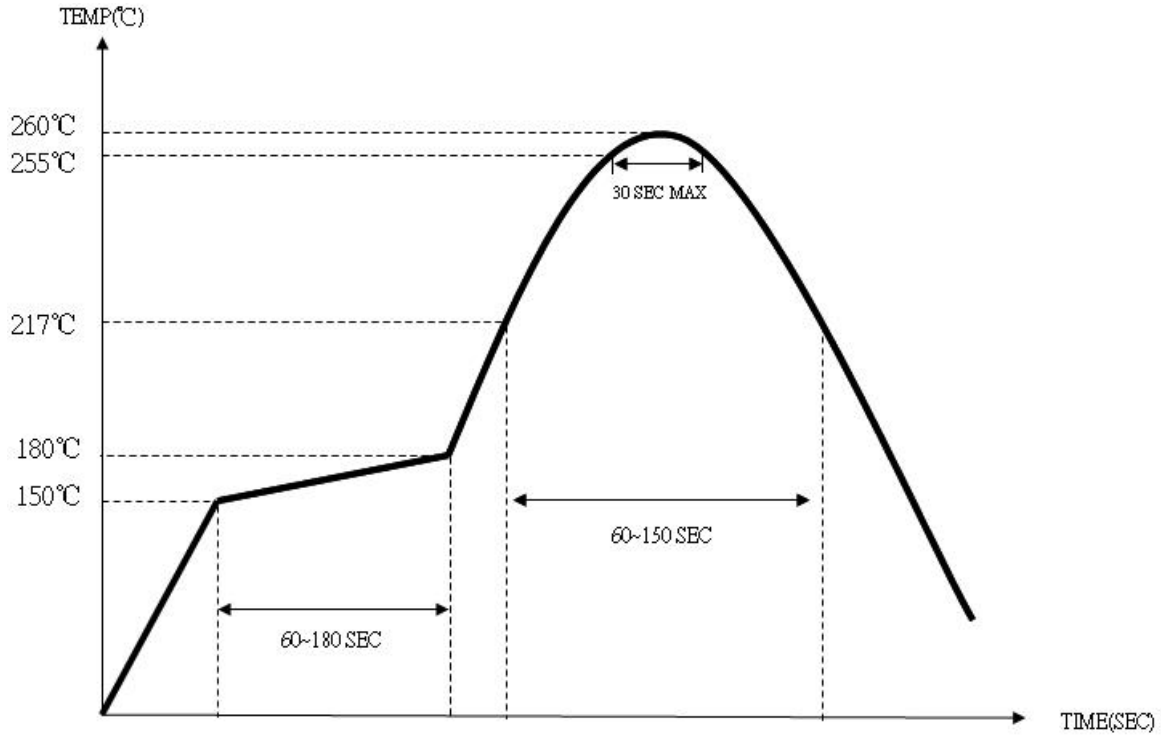

8. PACKING :

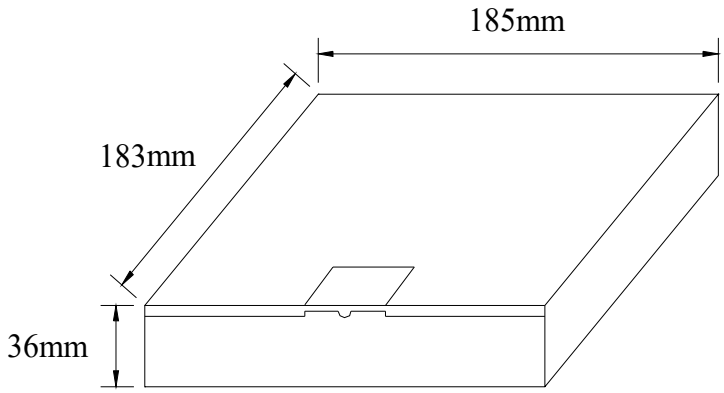

BOX = 3000 PCS / REEL(MAX)

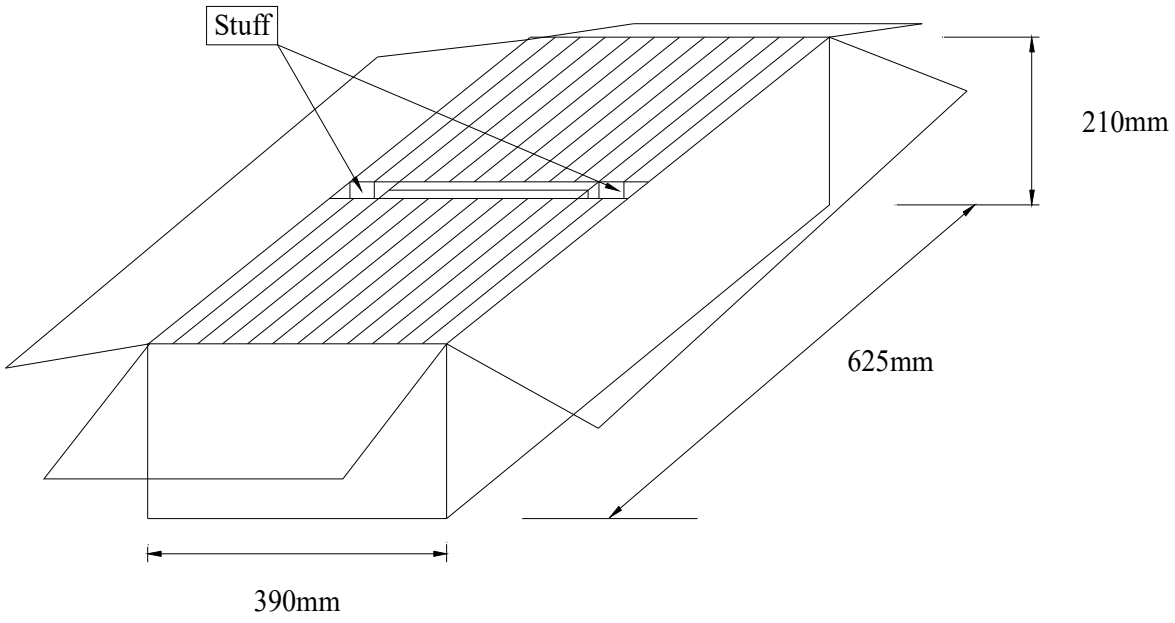

SMD product packs 32 BOX=The outside box packs (3000 PCS *32 BOX = 96000 PCS)(MAX)

9 . MECHANICAL PERFORMANCE

TEST ITEMS	TEST METHODS AND TEST CONDITION	PERFORMANCE
9.1 Drop Test	The specimen is measured for its frequency and resistance before the test. It is then dropped from a hight of 75 cm or more as a free fall object onto a hard wooden plate of 30mm or more in thickness. (in accordance with JIS-C0044)	To satisfy the electrical performance .
9.2 Vibration Test	The specimen is measured for its frequency and resistance before the test. Most them into X,Y and Z axes, respectively, for the vibration test. Vibration condition: Frequency range ; 20～2000HZ Peak to peak amplitude : 1.52 mm Peak acceleration : 20G Sweep time : 20 minute / axis Pendicular total test time : 4 hours (in accordance with MIL-STD-883F : 2007.3)	
9.3 Resistance to Soldering Test	The specimen is measured for its frequency and resistance before the test. Place the specimen on the belt of the converynace and let it pass through the reflow with the presetted temperature condition. After passing twice the reflow place,the specimen under the referee condition for -~2 hours and then measure its electrical performance. Temperature Condition of IR Simulation: The temperature range of the preheated section is setted at 150～180℃ for 60~120 sec. For the next section the temperature range is setted at 217~260℃ for 45~90 sec. and within this time range the specimen should be able to sustain at the peak temperature, 260+/-3℃ , for 10 sec long. (in accordance with JESD22-B106-B)	
9.4 Fine Leak Test	Place the specimen in a pressurized container and pressurize it with the detection gas (mixed gas consisting of 95% or more helium) for at least 2 hours. Complete the measurement of the concentration of helium within 30 min after taking it out from the pressurized container. (in accordance with MIL-STD-883F : 1014.11)	Less than $1.0 * 10^{-8}$ atm .c.c. / sec, Helium
	The referee condition . Temperature 25 ± 2 ℃ Humidity 44 ～ 55 % Pressure 86 ～ 106 kPa (in accordance with MIL-STD-883E : 1014. 9)	

10 . CLIMATIC RESISTANCE

TEST ITEMS	TEST METHODS AND TEST CONDITION	PERFORMANCE
10.1 Low Temp Exposure Test	The specimen is measured for its frequency and resistance before the test . Place the specimen in the chamber and kept it at the temperature of - 40 ± 3℃ for 168 ± 6 hours . Take the specimen out of the chamber and measure itselectrical performance after leaving 1～2 hours under the referee condition. (in accordance with JIS-C0020)	To satisfy the electrical performance .
10.2 Aging Test	The specimen is measured for its frequency and resistance before the test . Place the specimen in the testing chamber and keep it at the temperature of + 125 ± 3℃ for 720 ± 48 hours. And then take the specimen out of the chamber and measure its electrical performance after leaving for 1 ～ 2 hours under the referee condition . (in accordance with JIS-C0021)	
10.3 High Temperature & High Humidty	The specimen is measured for its frequency and resistance before the test . Place the specimen in the testing chamber and kept it at the temperature of + 85 ± 5 ℃ and humidity of 85 ± 5 % for 168 ± 6 hours.and then take the specimen out and measure its electrical performance after leaving for 1～2 hours under the referee condition. (in accordance with MIL-STD-883F : 1004.7)	
10.4 Temperature Cycle Test	The specimen is measured for its frequency and resistance before the test . Subject the specimen to the 100 cycles of temperature ranges stated below . High temp . + 125 ± 3 ℃ (15± 3 min). 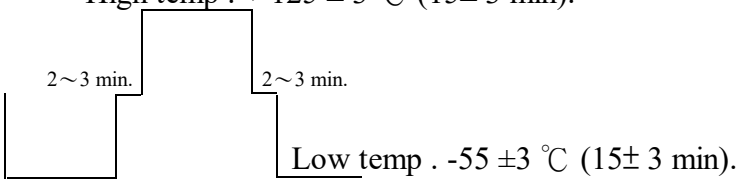 Measure its electrical performance after leaving it for 1 ～ 2 hours under the referee condition . (in accordance with MIL-STD-883F : 1010.8)	