Confidential

APPROVAL SHEET

Customer Name	:	
Customer P/N	:	
Frequency	:	40.000000 MHz
Aker Approved P/N	:	C16-40.000-8-1020-A-X-R
Aker MPN	:	
Rev.	:	1
ISSUE DATE	:	Jun.1.2023

APPROVED	CHECKED	PREPARED
APPROVED BY CUSTOMER		

AKER TECHNOLOGY CO., LTD.

ADDRESS : NO 11-3, Jianguo Rd., Tanzi Dist., Taichung City 427, Taiwan.

TEL：886-4-25335978 **FAX : 886-4-25336011**

Web: www.aker.com.tw

MSL:Level 1
RoHS compliant
IATF 16949 Certified
AEC-Q200 Qualified

Rev.	Date	Reviser	Revise contents
1	2023/6/1	Kiku	Initial Released

SMD CRYSTAL SPECIFICATION

1 . ELECTRICAL CHARACTERISTICS

■ Standard atmospheric conditions

Unless otherwise specified , the standard range of atmospheric conditions for making measurement and tests are as follow :

Ambient temperature : 25±5℃

Relative humidity : 40%~70%

If there is any doubt about the results , measurement shall be made within the following limits :

Ambient temperature : 25±3℃

Relative humidity : 40%~70%

- AKER Model : C16-Auto
- Oscillation Mode : Fundamental
- Cutting Mode : AT CUT
- Measurement Equipment : 250B(Measured FL)
- Insulation Resistance : More than 500M ohms at DC 100V

Parameters	Symbol	Electrical Spec				Notes
		Min.	Typ.	Max.	Units.	
Nominal Frequency	FL		40.000000		MHz	
Frequency Tolerance			±10		ppm	at 25℃ ± 3℃
Frequency Stability			±20		ppm	Operating Temp(Refer 25℃)
Load Capacitance	CL		8		pF	
Aging			±3		ppm	First Year at 25℃
Operating Temperature		-40	~	85	℃	
Storage Temperature Range		-55	~	150	℃	
Drive Level	DL			100	uW	
Equivalent Series Resistance	ESR			60	Ω	@Series
Shunt Capacitance	C0			3	pF	

Please kindly be noted that AKER DO NOT guarantee parts quality which involves human security application.

2 . MARKING :

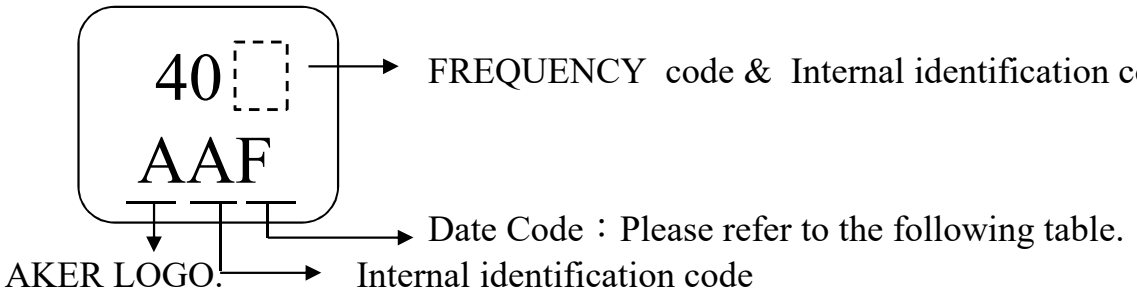

Date Code Table

Month / Year			1	2	3	4	5	6	7	8	9	10	11	12
2019	2023	(4N+3)	A	B	C	D	E	F	G	H	J	K	L	M
2020	2024	(4N+0)	N	P	Q	R	S	T	U	V	W	X	Y	Z
2021	2025	(4N+1)	a	b	c	d	e	f	g	h	j	k	l	m
2022	2026	(4N+2)	n	p	q	r	s	t	u	v	w	x	y	z

A cycle every four years

3 . DIMENSION : (Unit : mm)

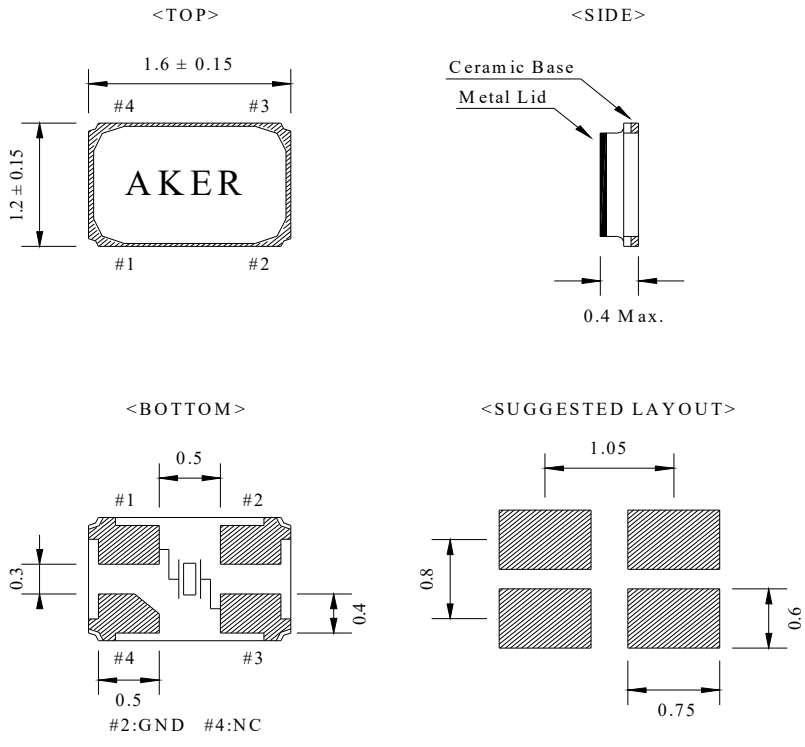

4 . STRUCTURE ILLUSTRATION

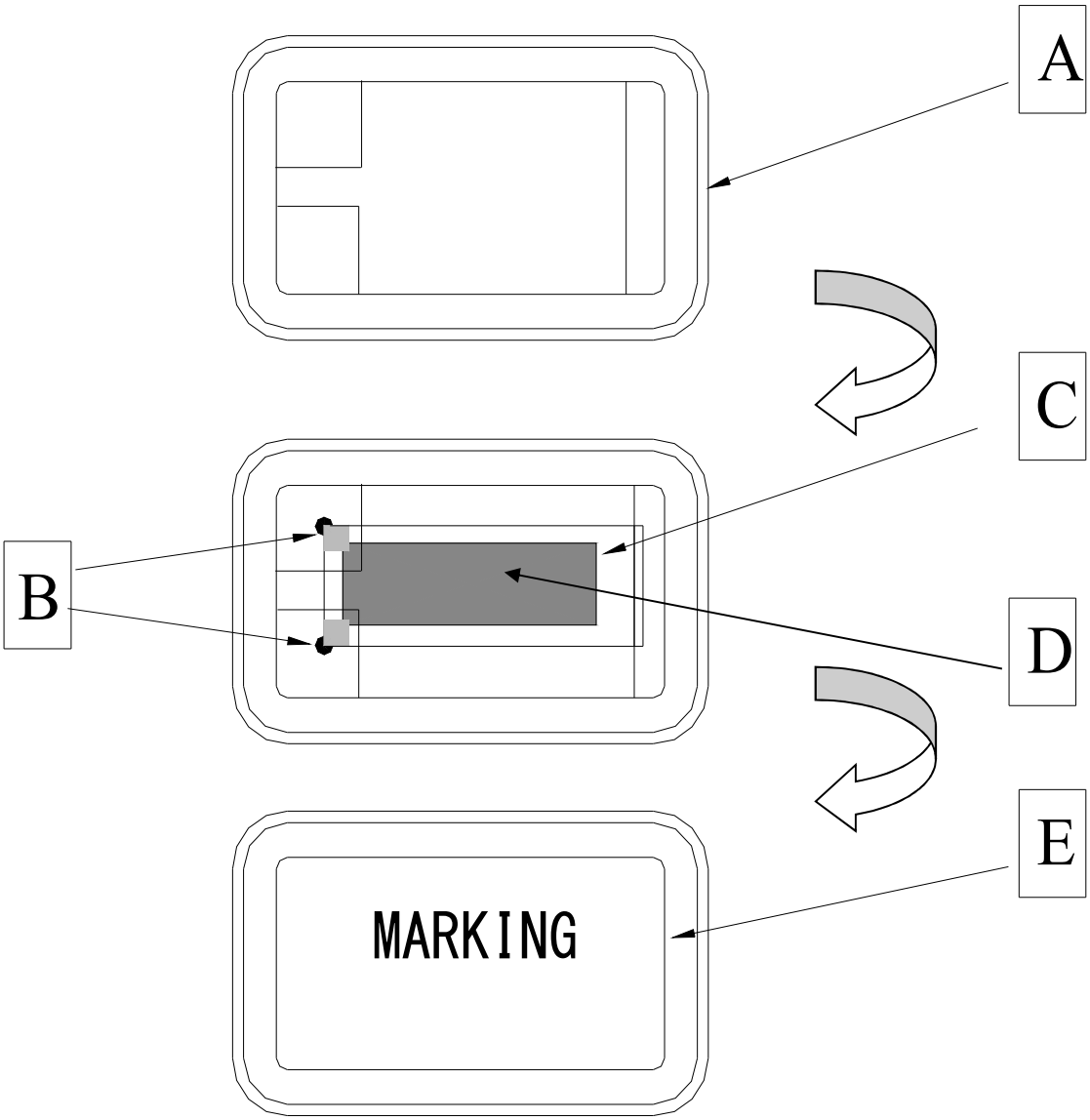

COMPONENTS		MATERIALS	COMPONENTS		MATERIALS
A	Base (Package)	Ceramic(Al_2O_3)+Kovar(Fe/Co/Ni)	D	Electrode	Cr / Ag
B	Conductive adhesive	Ag / Silicon resin	E	Lid	Fe/Co/Ni
C	Crystal blank	SiO_2			

5 . PACKING :

TAPE SPECIFICATION

(Unit : mm)

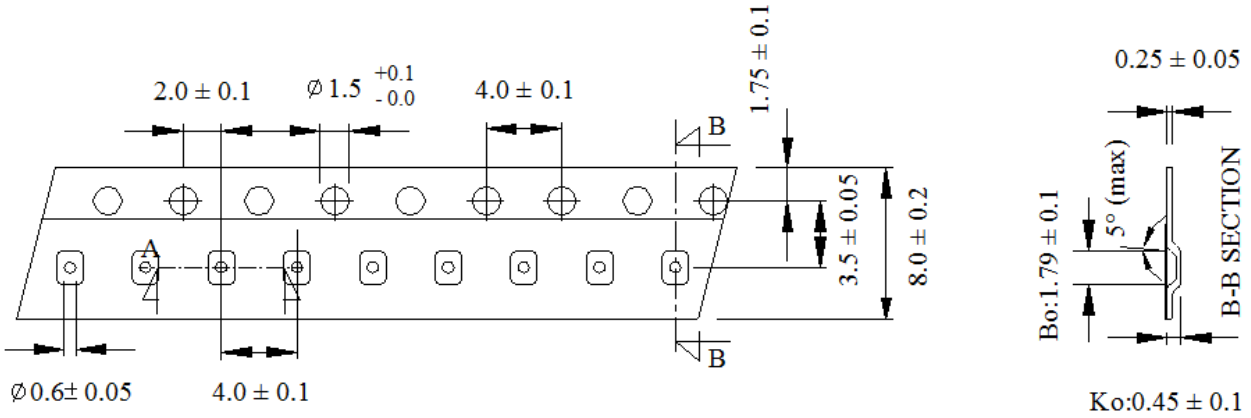

OUTLINE DIMENSION

(Unit : mm)

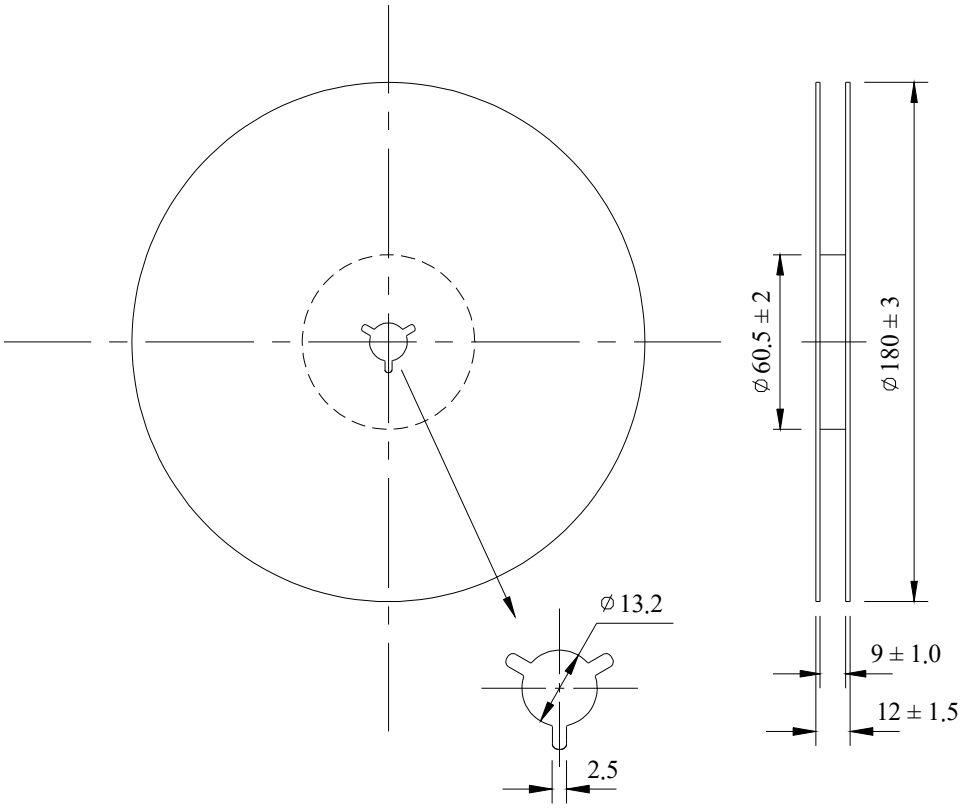

6. COVER TAPE ADHESION STRENGTH：

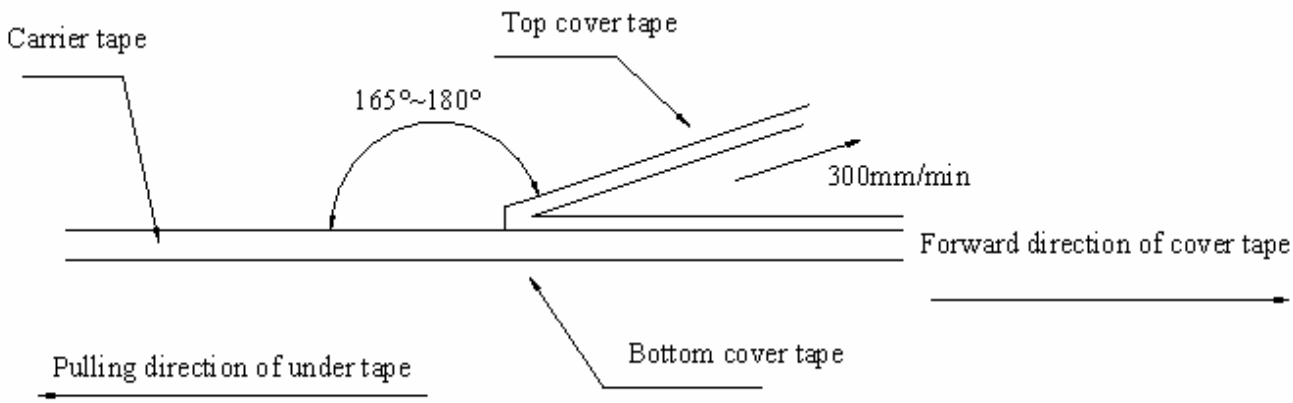

*** In the case, the cover tape is pulled off under the above conditions, the cover tape adhesion strength should be 10.2g~71.4g Plastic tape: 10.2g~71.4g

(Cover tape adhesion strength)

7 . SOLDERING REFLOW PROFILE

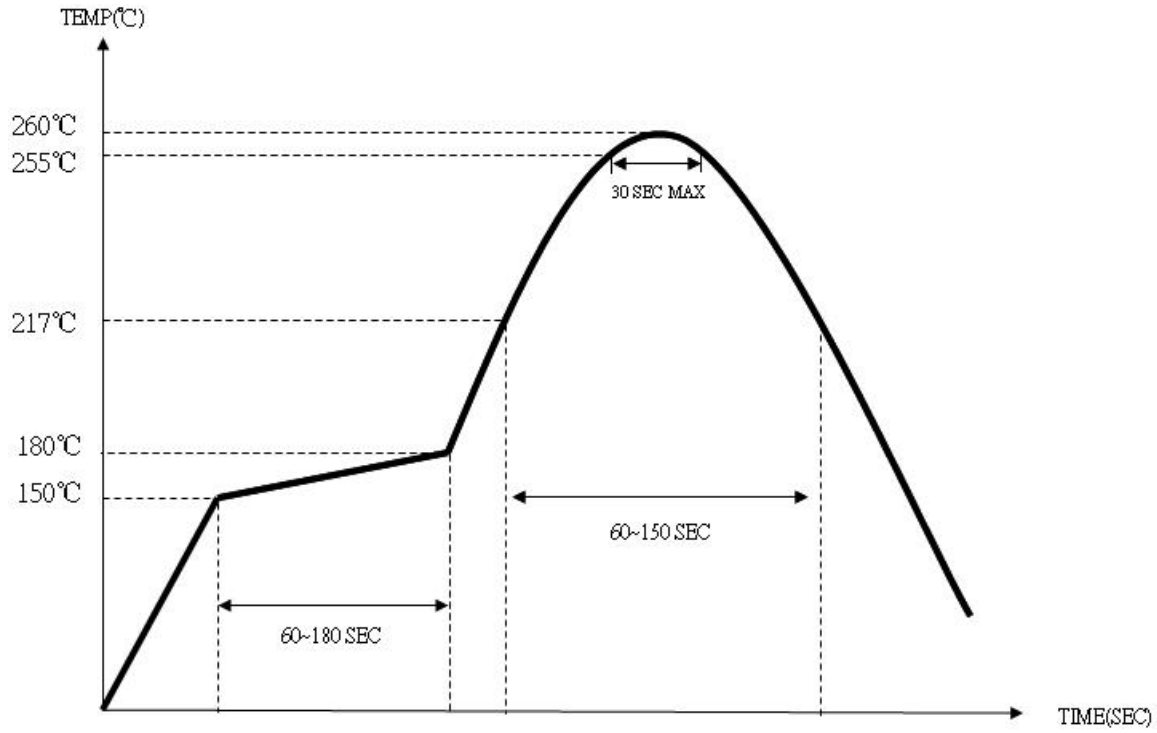

8. PACKING :

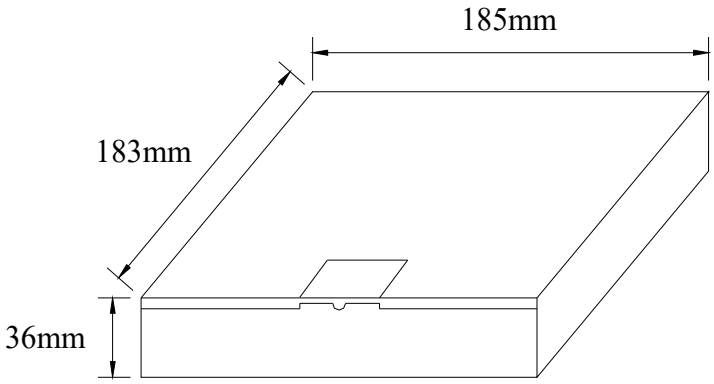

BOX = 3000 PCS / REEL(MAX)

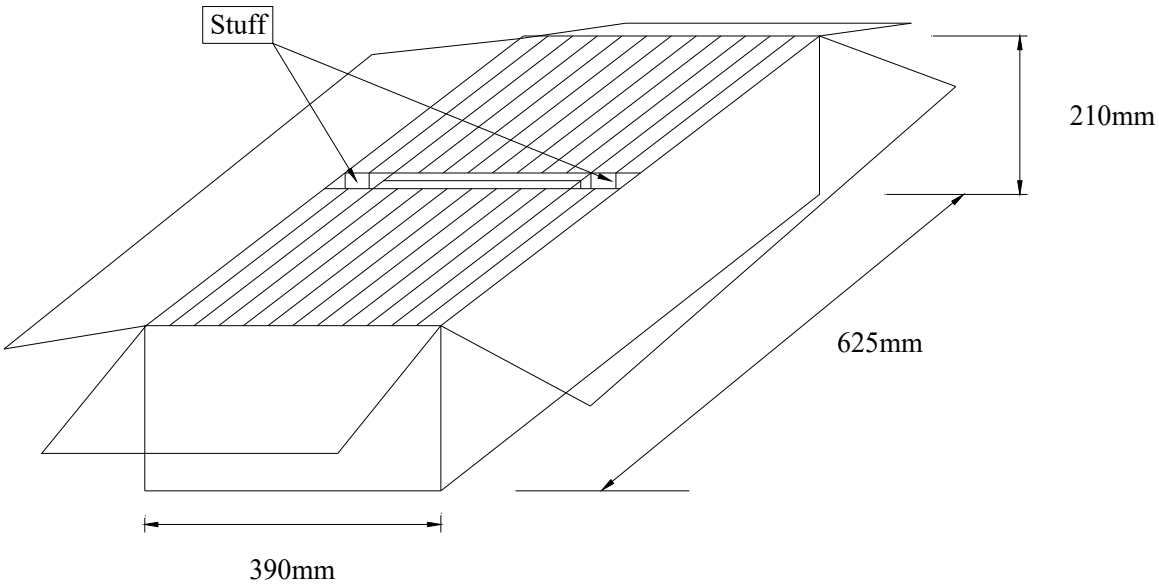

SMD product packs 32 BOX = The outside box packs (3000 PCS * 32 BOX = 96000 PCS)(MAX)

9 . MECHANICAL PERFORMANCE

TEST ITEMS	TEST METHODS AND TEST CONDITION	PERFORMANCE
9.1 Temperature Cycling	-55±3℃/30min maximum~+125±3℃/30min maximum，1000cycles	To satisfy the electrical performance .
9.2 Operational Life	125℃±3°C，1000hrs±12hrs	
9.3 Biased Humidity	85°C±5°C&85%±5%R.H.，1000±12hrs	
9.4 Resistance To Soldering Heat Test	Reflow test 2 times.	
9.5 High Temperature Exposure	150℃±3°C，1000hrs±12hrs	
9.6 Vibration Test	Freq.range: 10~2000Hz，Peak to peak amplitude:1.52mm Peak acceleration:5G (49m/s2)，3 direction(X, Y,Z) ，20min 12cycles each of 3 orientations.	
9.7 Mechanical Shock	100G，6mS，3 times for each direction(X, Y, Z)，3 cycles	
9.8 Physical Dimension	Verify physical dimensions to the applicable device detail specification.	
9.9 Solderability	260℃ ，Coated > 95%	
9.10 Board Flex	PCB=100*40(mm)，Bending=2 mm (min)，Duration=60+5/-0 sec	
9.11 External Visual	Inspect device construction and marking.	
9.12 Terminal Strength	A force of 17.7N for 60 seconds.	