CUI INC®

SERIES: PJ-064X | DESCRIPTION: DC POWER JACK

FEATURES
- mounting hardware includes nut and washer
- panel mount
- metal bushing



RoHS

PART NUMBER KEY

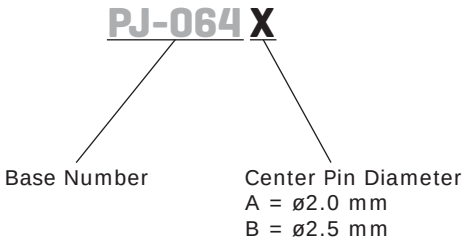

SPECIFICATIONS

parameter	conditions/description	min	typ	max	units
rated input voltage			24		Vdc
rated input current				5	A
contact resistance				30	mΩ
insulation resistance	at 500 Vdc	100			MΩ
voltage withstand	for 1 minute			500	Vac
insertion/withdrawl force		0.2		3.0	kgf
operating temperature		-25		70	°C
life			5,000		cycles

SOLDERABILITY

parameter	conditions/description	min	typ	max	units
hand soldering	for 3~5 seconds at	295	300	305	°C
wave soldering	for 3~5 seconds at	245	250	255	°C

MECHANICAL DRAWING

units: mm[inches]

TOLERANCE:
±0.3mm (unless otherwise specified)

	MATERIAL	PLATING
center pin	brass	nickel
terminal 1	brass	silver
terminal 2	phosphor bronze	silver
terminal 3	brass	silver
bushing	brass	nickel
insulator	red vulcanite fiber	
plastic	PBT	
nut	brass	nickel
washer	steel	nickel

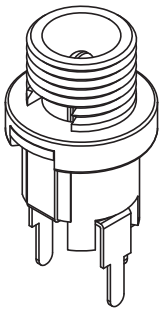

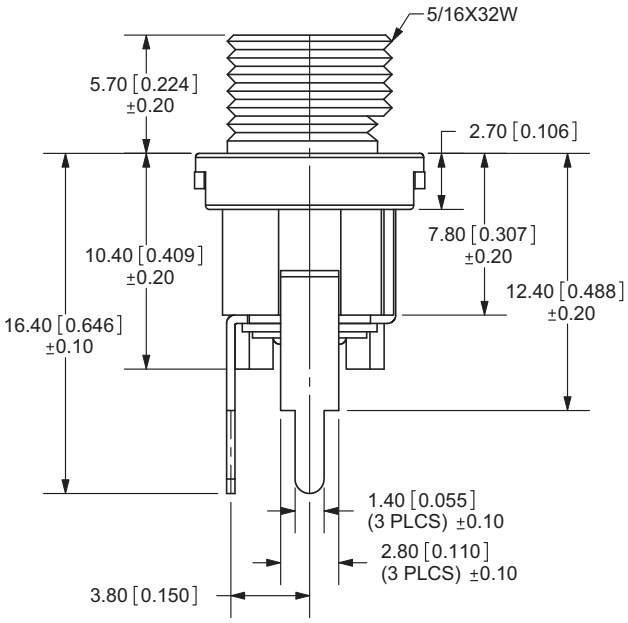

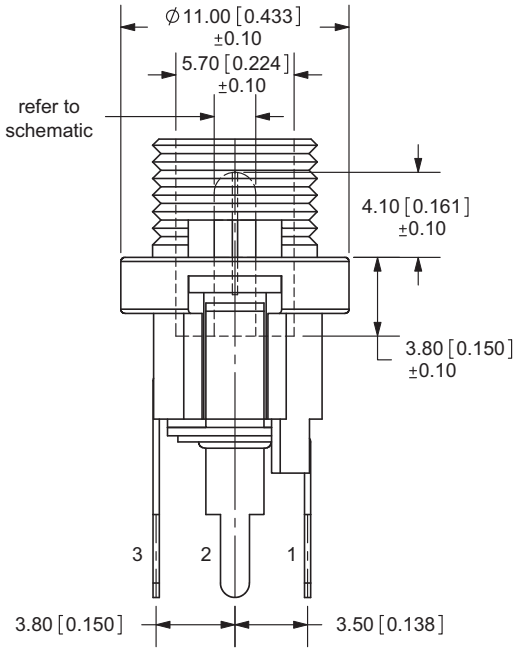

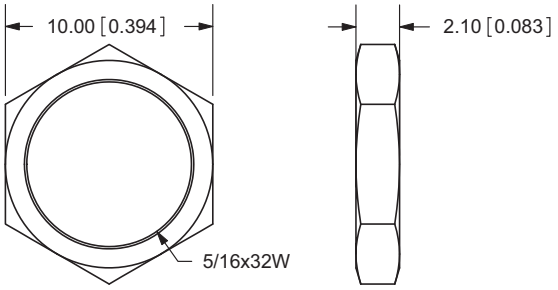

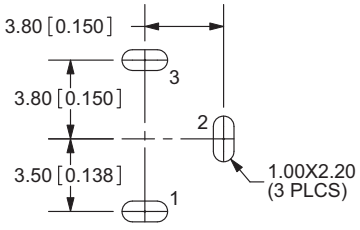

PCB LAYOUT
TOP VIEW

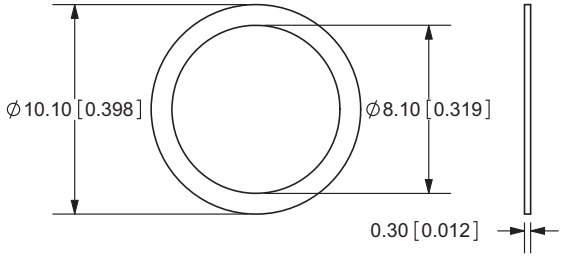

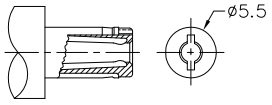

MATING PLUG
Jack Insertion Depth: 8.4mm

Schematic	
Model	Center Pin
PJ-064A	ø2.0 mm
PJ-064B	ø2.5 mm

REVISION HISTORY

rev.	description	date
1.0	initial release	08/03/2010
1.01	new template applied	06/14/2012
1.02	updated voltage and current rating	12/19/2012

The revision history provided is for informational purposes only and is believed to be accurate.

CUI INC®

Headquarters
20050 SW 112th Ave.
Tualatin, OR 97062
800.275.4899

Fax 503.612.2383
cui.com
techsupport@cui.com

CUI offers a one (1) year limited warranty. Complete warranty information is listed on our website.

CUI reserves the right to make changes to the product at any time without notice. Information provided by CUI is believed to be accurate and reliable. However, no responsibility is assumed by CUI for its use, nor for any infringements of patents or other rights of third parties which may result from its use.

CUI products are not authorized or warranted for use as critical components in equipment that requires an extremely high level of reliability. A critical component is any component of a life support device or system whose failure to perform can be reasonably expected to cause the failure of the life support device or system, or to affect its safety or effectiveness.