CUI INC®

date 08/02/2011
page 1 of 2

SERIES: PD-40VS | **DESCRIPTION:** 4 PIN POWER DIN

FEATURES

- PCB mount
- vertical
- shielded



RoHS

SPECIFICATIONS

parameter	conditions/description	min	typ	max	units
rated input voltage			20		Vdc
rated input current				7.5	A
contact resistance				30	mΩ
insulation resistance	at 500 Vdc at 500 Vdc, after environmental tests	100 50			MΩ MΩ
voltage withstand	at 50/60Hz for 1 minute			500	Vac

MECHANICAL DRAWING

units: mm [inch]

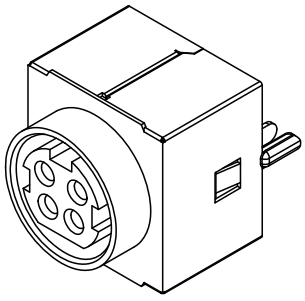

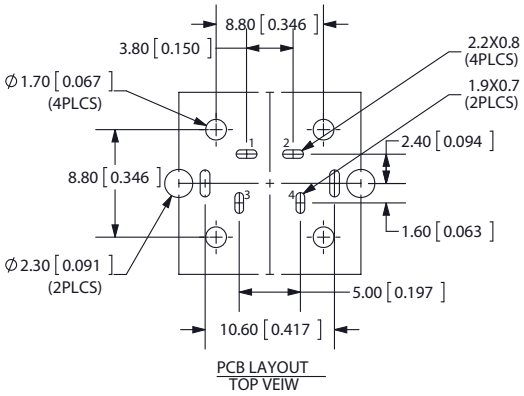

	MATERIAL	PLATING
inner shield	0.4T bronze	nickel plated
metal shell	0.3T bronze	nickel plated
contact terminal	0.3T phosphor bronze	silver plated
cover	PBT	black color
housing	PBT	black color
plastic	PA6T	

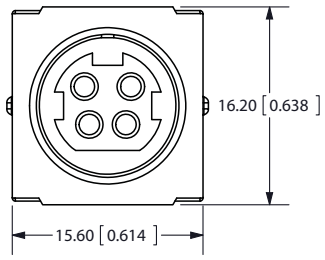

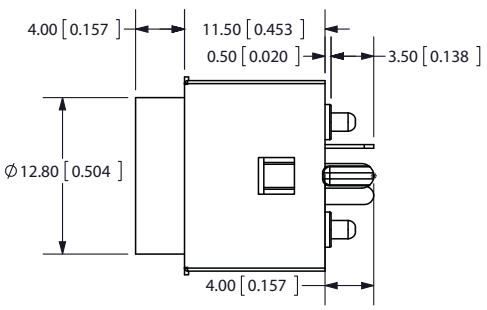

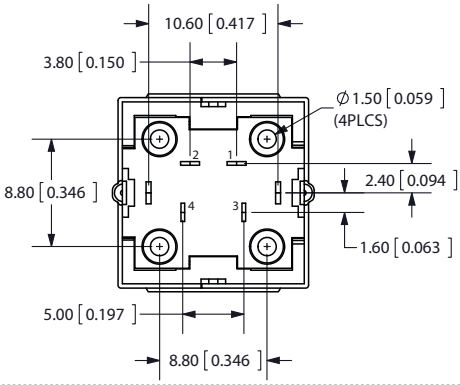

REVISION HISTORY

rev.	description	date
1.0	initial release	8/02/2011

The revision history provided is for informational purposes only and is believed to be accurate.

CUI INC®

Headquarters
20050 SW 112th Ave.
Tualatin, OR 97062
800.275.4899

Fax 503.612.2383
cui.com
techsupport@cui.com

CUI offers a one (1) year limited warranty. Complete warranty information is listed on our website.

CUI reserves the right to make changes to the product at any time without notice. Information provided by CUI is believed to be accurate and reliable. However, no responsibility is assumed by CUI for its use, nor for any infringements of patents or other rights of third parties which may result from its use.

CUI products are not authorized or warranted for use as critical components in equipment that requires an extremely high level of reliability. A critical component is any component of a life support device or system whose failure to perform can be reasonably expected to cause the failure of the life support device or system, or to affect its safety or effectiveness.