CUI INC®

MODEL: MJ-3536 | DESCRIPTION: 3.5MM AUDIO JACK

FEATURES
- isolated ground pin
- internal tip switch



RoHS

SPECIFICATIONS

parameter	conditions/description	min	typ	max	units
rated input voltage			12		Vdc
rated input current				1	A
contact resistance	between terminal and mating plug between terminal in a closed circuit[1]			50 30	mΩ mΩ
insulation resistance	at 500 Vdc	100			MΩ
voltage withstand	at 50/60Hz for 1 minute			500	Vac
insertion/withdrawl force		0.3		3	kg
terminal strength	any direction for 10 seconds			500	g
operating temperature		-25		85	°C
life			5,000		cycles

Notes: 1. When measured at a current of less than 100 mA / 1 kHz

SOLDERABILITY

parameter	conditions/description	min	typ	max	units
wave soldering	dipped in solder pot for 5±0.5 seconds at	255	260	265	°C

MECHANICAL DRAWING

units: mm[inches]
Tolerance:
X.X ±0.2mm
X.XX ±0.1mm
X.XXX ±0.05mm

MODEL NO.	MJ-3536
DIA.	THREADED
	M6X0.5
SCHEMATIC	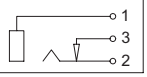

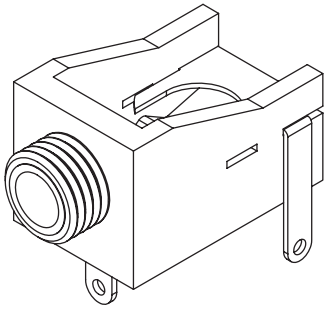

	MATERIAL	PLATING
terminal 1	brass	Tin
terminal 2	copper alloy	Tin
terminal 3	brass	Tin
bushing	brass	nickel
plastic	PBT	

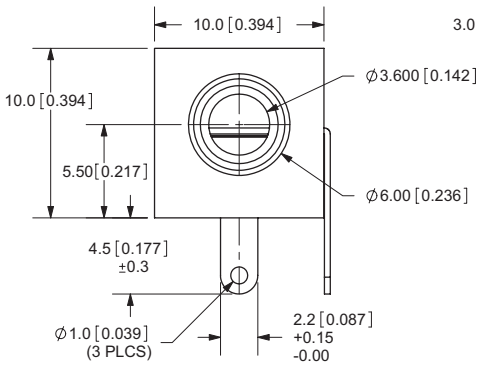

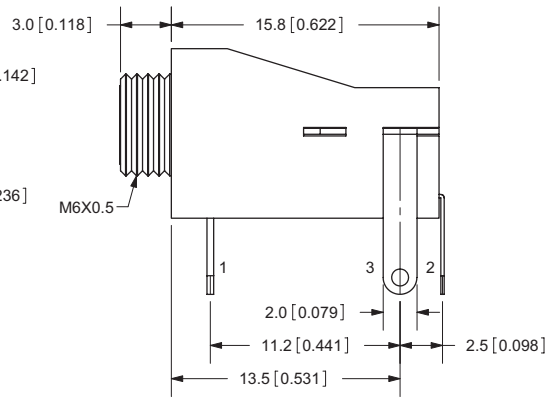

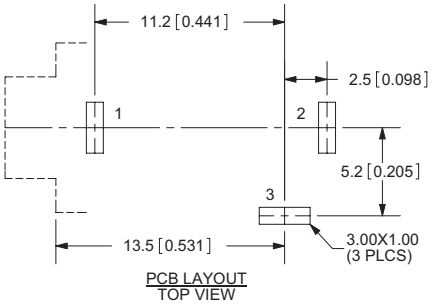

REVISION HISTORY

rev.	description	date
1.0	initial release	11/11/2005
1.01	new template applied	01/27/2012

The revision history provided is for informational purposes only and is believed to be accurate.

CUI INC®

Headquarters
20050 SW 112th Ave.
Tualatin, OR 97062
800.275.4899

Fax 503.612.2383
cui.com
techsupport@cui.com

CUI offers a one (1) year limited warranty. Complete warranty information is listed on our website.

CUI reserves the right to make changes to the product at any time without notice. Information provided by CUI is believed to be accurate and reliable. However, no responsibility is assumed by CUI for its use, nor for any infringements of patents or other rights of third parties which may result from its use.

CUI products are not authorized or warranted for use as critical components in equipment that requires an extremely high level of reliability. A critical component is any component of a life support device or system whose failure to perform can be reasonably expected to cause the failure of the life support device or system, or to affect its safety or effectiveness.