CUI INC®

SERIES: MD-SN | **DESCRIPTION:** MINI DIN CONNECTOR

FEATURES
- vertical
- panel mount
- thin metal mounting ears

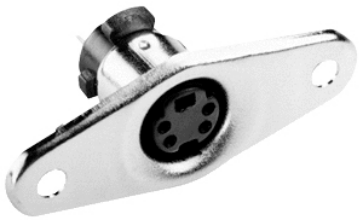

RoHS

PART NUMBER KEY

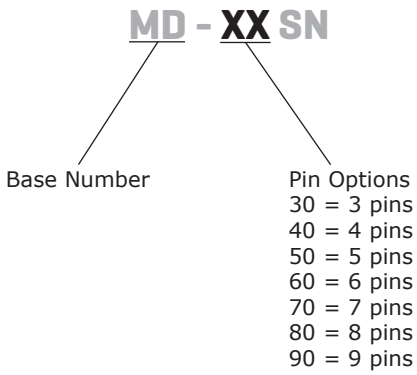

SPECIFICATIONS

parameter	conditions/description	min	typ	max	units
rated input voltage			100 12		Vac Vdc
rated input current	at 100 Vac at 12 Vdc			1 2	A A
contact resistance				30	mΩ
insulation resistance	at 250 Vdc	50			MΩ
voltage withstand	for 1 minute			250	Vac
insertion force				4.5	kg
withdrawal force		0.9		3	kg
operating temperature		-20		105	°C
life			4,000		cycles
flammability rating	UL94V-0				
RoHS	2011/65/EU				

MECHANICAL DRAWINGS

units: mm[inches]

TOLERANCE: ±0.1mm

	MATERIAL	PLATING
shell (30~80)	iron	nickel
shell (90)	brass	nickel
contact terminals (1~9)	phosphor bronze	silver
plastic	nylon + fiber	

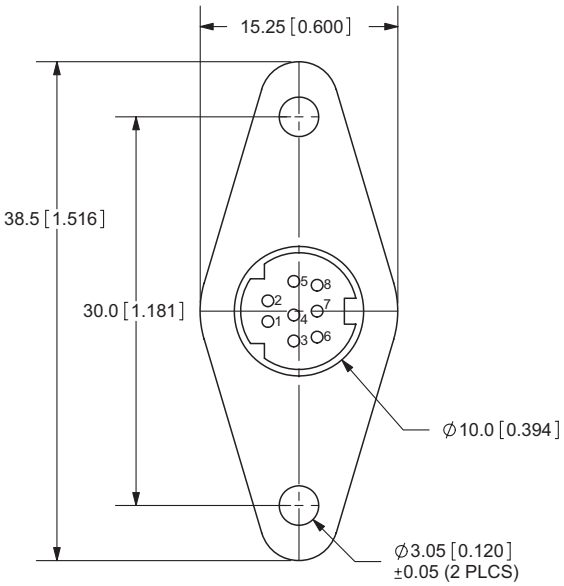

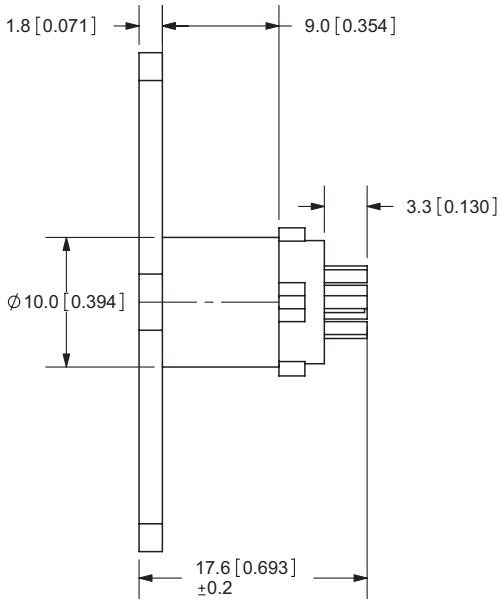

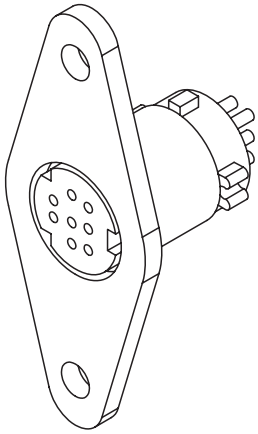

MD-30SN

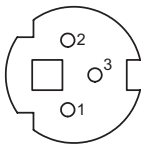

MD-40SN

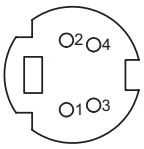

MD-50SN

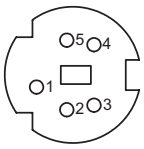

MD-60SN

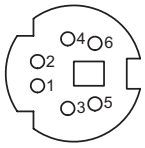

MD-70SN

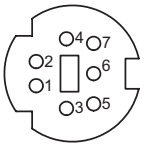

MD-80SN

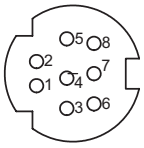

MECHANICAL DRAWINGS (CONTINUED)

MD-90SN

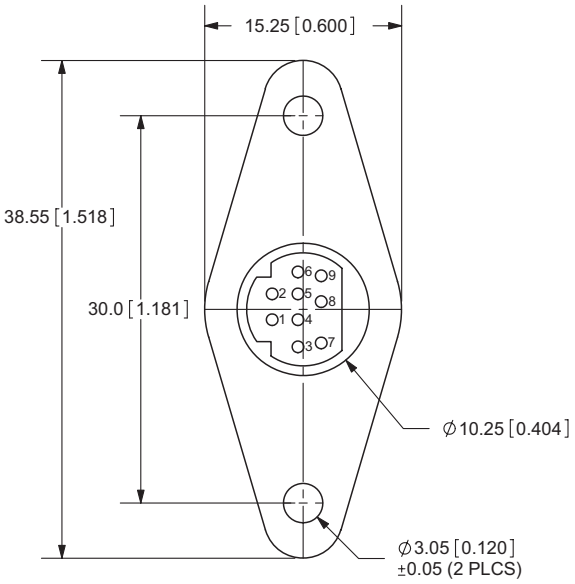

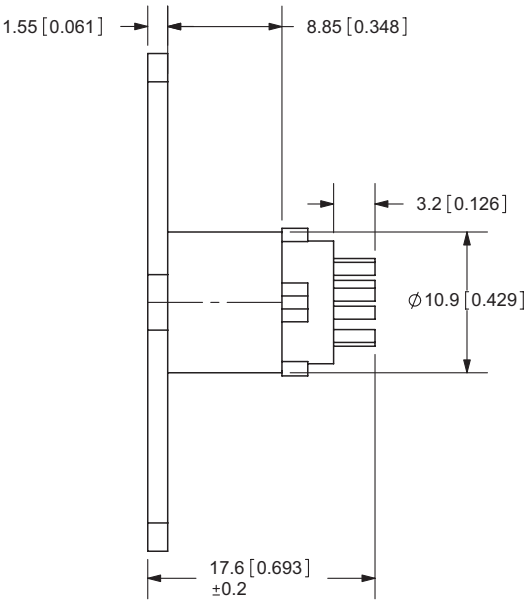

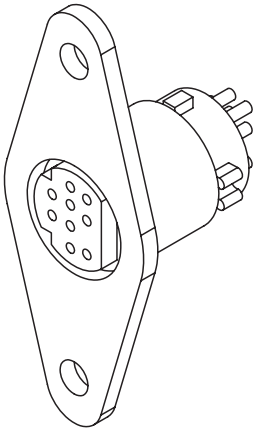

REVISION HISTORY

rev.	description	date
1.0	initial release	04/07/2006
1.01	new template applied	05/02/2012
1.02	housing updates	05/04/2012
1.03	updated datasheet	09/08/2017

The revision history provided is for informational purposes only and is believed to be accurate.

CUI INC®

Headquarters
20050 SW 112th Ave.
Tualatin, OR 97062
800.275.4899

Fax 503.612.2383
cui.com
techsupport@cui.com

CUI offers a one (1) year limited warranty. Complete warranty information is listed on our website.

CUI reserves the right to make changes to the product at any time without notice. Information provided by CUI is believed to be accurate and reliable. However, no responsibility is assumed by CUI for its use, nor for any infringements of patents or other rights of third parties which may result from its use.

CUI products are not authorized or warranted for use as critical components in equipment that requires an extremely high level of reliability. A critical component is any component of a life support device or system whose failure to perform can be reasonably expected to cause the failure of the life support device or system, or to affect its safety or effectiveness.